ARCTEQ
PART OF ENSTO GROUP

AQ-ONE

Protection and control device

Instruction manual



Table of contents

1 Document information 7
1.1 Version 1 revision notes 7
1.2 Safety information 7
1.3 Abbreviations 8
2 General 10
3 Local panel structure 11
4 Functions 16
4.1 Functions included 16
4.2 Measurements 26
4.2.1 Current measurement and scaling 26
4.2.2 Current measurement and scaling in differential applications 39
4.2.3 Voltage measurement and scaling 50
4.2.4 Power and energy calculation 65
4.2.5 Frequency tracking and scaling 73
4.2.6 Demand measurement 76
4.3 General menu 79
4.4 Alarming function 83
4.5 Protection functions 90
4.5.1 General properties of a protection function 90
4.5.2 Line protection module general settings 99
4.5.2.1 Line protection module general settings 106
4.5.2.2 Protected line settings 112
4.5.2.3 Line differential protection (IdL>; 87L) 119
4.5.2.4 Line distance protection (Z<;21) 128
4.5.2.5 Power swing blocking and out-of-step tripping 144
4.5.3 Capacitor bank module 148
4.5.3.1 Capacitor bank overload protection (Icol>; 49OL) 153
4.5.3.2 Capacitor bank neutral unbalance protection (Cnu>; 50UB) 158
4.5.3.3 Capacitor bank current unbalance protection (Iuc>; 46C) 163
4.5.4 Non-directional overcurrent protection (I>; 50/51) 168
4.5.5 Single-pole non-directional overcurrent protection (I>; 50/51) 172
4.5.6 Non-directional earth fault protection (I0>; 50N/51N) 177
4.5.7 Directional overcurrent protection (Idir>; 67) 181
4.5.8 Directional earth fault protection (I0dir>; 67N/32N) 187
4.5.9 Intermittent earth fault protection (I0int>; 67NT) 199
4.5.10 Negative sequence overcurrent/ phase current reversal/ current unbalance protection (I2>; 46/46R/46L) 209
4.5.11 Harmonic overcurrent protection (Ih>; 50H/51H/68H) 214
4.5.12 Circuit breaker failure protection (CBFP; 50BF/52BF) 220
4.5.13 Low-impedance or high-impedance restricted earth fault/ cable end differential protection (I0d>; 87N) 235
4.5.14 Overvoltage protection (U>; 59) 244
4.5.15 Undervoltage protection (U<; 27) 251
4.5.16 Neutral overvoltage protection (U0>; 59N) 258
4.5.17 Sequence voltage protection (U1/U2>/<; 47/27P/59PN) 263
4.5.18 Low-voltage ride-through (27T) 271
4.5.19 Overfrequency and underfrequency protection (f>/<; 81O/81U) 276
4.5.20 Rate-of-change of frequency (df/dt>/<; 81R) 280
4.5.21 Power protection (P, Q, S>/<; 32) 284
4.5.22 Transformer status monitoring 288
4.5.23 Motor status monitoring 297

© Arcteq Relays Ltd

4.5.24 Generator/motor/transformer differential protection (Idb>/Idi>/I0dHV>/I0dLV>; 87T/87G/87M/87N) 305
4.5.25 100 % stator earth fault protection (U03rd<; 64S) 326
4.5.26 Underexcitation protection (Q<; 40) 331
4.5.27 Underimpedance protection (Z<; 21U) 337
4.5.28 Underexcitation protection (X<; 40) 341
4.5.29 Voltage-restrained overcurrent protection (Iv>; 51V) 345
4.5.30 Inadvertent energizing protection (I> U< I.A.E; 50/27) 349
4.5.31 Volts-per-hertz overexcitation protection (V/Hz>; 24) 353
4.5.32 Power factor protection (PF<; 55) 358
4.5.33 Pole slip protection (78) 363
4.5.34 Machine thermal overload protection (TM>; 49M) 367
4.5.35 Line thermal overload protection (TF>; 49F) 399
4.5.36 Transformer thermal overload protection (TT>; 49T) 420
4.5.37 Motor start/ locked rotor monitoring (Ist>; 48/14) 430
4.5.38 Frequent start protection (N>; 66) 439
4.5.39 Non-directional undercurrent protection (I<; 37) 444
4.5.40 Mechanical jam protection (Im>; 51M) 447
4.5.41 Resistance temperature detectors (RTD) 451
4.5.42 Programmable stage (PSx>/<; 99) 454
4.5.43 Arc fault protection (IArc>/I0Arc>; 50Arc/50NArc) 464
4.6 Control functions 471
4.6.1 Common signals 471
4.6.2 Automatic voltage regulator (90) 473
4.6.3 Parallel voltage regulator 502
4.6.4 Setting group selection 511
4.6.5 Object control and monitoring 514
4.6.6 Single-pole object control and monitoring 522
4.6.7 Indicator object monitoring 529
4.6.8 Auto-recloser (79) 531
4.6.9 Zero sequence recloser (U0> RECL; 79N) 557
4.6.10 Cold load pick-up (CLPU) 561
4.6.11 Switch-on-to-fault (SOTF) 570
4.6.12 Vector jump (Δφ; 78) 573
4.6.13 Synchrocheck (ΔV/Δa/Δf; 25) 577
4.6.14 Synchronizer (ΔV/Δa/Δf; 25) 589
4.6.15 Milliampere output control 597
4.6.16 Power factor controller (90PF) 599
4.6.17 Programmable control switch 609
4.6.18 Function buttons 611
4.6.19 Analog input scaling curves 612
4.6.20 Logical outputs 615
4.6.21 Logical inputs 616
4.7 Monitoring functions 618
4.7.1 Current transformer supervision 618
4.7.2 Voltage transformer supervision (60) 627
4.7.3 Circuit breaker wear monitoring 631
4.7.4 Current total harmonic distortion (THD) 636
4.7.5 Voltage total harmonic distortion (THD) 640
4.7.6 Fault locator (21FL) 644
4.7.7 Running hour counter 646
4.7.8 Measurement recorder 647
4.7.9 Fault register 652
4.7.10 Event logger 657
4.7.11 Disturbance recorder (DR) 658
4.7.12 User access control 669
5 Communication 673
5.1 Connections menu 673

5.2 Time synchronization 677
5.2.1 Internal 677
5.2.2 NTP 677
5.2.3 PTP 678
5.3 Communication protocols 680
5.3.1 IEC 61850 680
5.3.1.1 Logical device mode and logical node mode 682
5.3.1.2 GOOSE 686
5.3.2 Modbus TCP and Modbus RTU 690
5.3.3 IEC 103 691
5.3.4 IEC 101/104 692
5.3.5 SPA 694
5.3.6 DNP3 695
5.3.7 Modbus I/O 698
5.3.8 OPCUA 699
5.3.9 Integration time 699
5.4 Analog fault registers 700
5.5 Modbus Gateway 701

6 Construction and installation 706

6.1 Construction 706
6.2 CPU module 710
6.3 Current measurement module 713
6.4 Voltage measurement module 714
6.5 Option cards 715
6.5.1 Digital input module (optional) 715
6.5.2 Digital output module (optional) 718
6.5.3 High-speed and high-current output module (optional) 720
6.5.4 Milliampere output module (4x mA out & 1x mA in) (optional) 722
6.5.5 Milliampere input module (4x mA in & 1x mA out) (optional) 724
6.5.6 Point sensor arc protection module (optional) 725
6.5.7 RTD input module (optional) 727
6.5.8 Double RJ45 Ethernet & IRIG-B communication module (optional) 728
6.5.9 Double SFP Ethernet & IRIG-B communication module (optional) 729
6.5.10 Double ST 100 Ethernet & IRIG-B communication module (optional) 730
6.5.11 Double LC or RJ45 (HSR/PRP) Ethernet communication module (optional) 731
6.5.12 Serial RS-232 communication module (optional) 732
6.6 Dimensions and installation 734

7 Technical data 741

7.1 Hardware 741
7.1.1 Measurements 741
7.1.1.1 Current measurement 741
7.1.1.2 Voltage measurement 743
7.1.1.3 Voltage memory 743
7.1.1.4 Power and energy measurement 744
7.1.1.5 Frequency measurement 745
7.1.2 CPU & Power supply 745
7.1.2.1 Auxiliary voltage 745
7.1.2.2 CPU communication ports 746
7.1.2.3 CPU digital inputs 747
7.1.2.4 CPU digital outputs 747
7.1.3 Option cards 748
7.1.3.1 Digital input module 748
7.1.3.2 Digital output module 749
7.1.3.3 High-speed and high-current output module 750
7.1.3.4 Milliampere output module (4 x mA out & 1 x mA in) 751
7.1.3.5 Milliampere input module (1x mA out & 4x mA in) 751
7.1.3.6 Point sensor arc protection module 752

© Arcteq Relays Ltd

7.1.3.7 RTD input module 754
7.1.3.8 Double RJ-45 Ethernet & IRIG-B communication module 754
7.1.3.9 Double SFP Ethernet & IRIG-B communication module 755
7.1.3.10 Double ST Ethernet & IRIG-B communication module 755
7.1.3.11 Double LC (HSR/PRP) Ethernet communication module 756
7.1.3.12 Double RJ-45 (HSR/PRP) Ethernet communication module 757
7.1.3.13 RS-232 & serial fiber communication module 757
7.1.4 Display 758
7.2 Functions 759
7.2.1 Protection functions 759
7.2.1.1 Capacitor bank overload protection (Icol>; 49OL) 759
7.2.1.2 Capacitor bank neutral unbalance protection (Cnu>; 50UB) 760
7.2.1.3 Capacitor bank current unbalance protection (Iuc>; 46C) 761
7.2.1.4 Non-directional overcurrent protection (I>; 50/51) 762
7.2.1.5 Non-directional earth fault protection (I0>; 50N/51N) 763
7.2.1.6 Directional overcurrent protection (Idir>; 67) 764
7.2.1.7 Directional earth fault protection (I0dir>; 67N/32N) 765
7.2.1.8 Intermittent earth fault protection (I0int>; 67NT) 766
7.2.1.9 Negative sequence overcurrent/ phase current reversal/ current unbalance protection (I2>; 46/46R/46L) 767
7.2.1.10 Harmonic overcurrent protection (Ih>; 50H/51H/68H) 768
7.2.1.11 Circuit breaker failure protection (CBFP; 50BF/52BF) 769
7.2.1.12 Low-impedance or high-impedance restricted earth fault/ cable end differential protection (I0d>; 87N) 770
7.2.1.13 Overvoltage protection (U>; 59) 771
7.2.1.14 Undervoltage protection (U<; 27) 771
7.2.1.15 Neutral overvoltage protection (U0>; 59N) 773
7.2.1.16 Sequence voltage protection (U1/U2>/<; 47/27P/59NP) 773
7.2.1.17 Overfrequency and underfrequency protection (f>/<; 81O/81U) 774
7.2.1.18 Rate-of-change of frequency protection (df/dt>/<; 81R) 775
7.2.1.19 Power protection (P, Q, S>/<; 32) 776
7.2.1.20 Line thermal overload protection (TF>; 49F) 777
7.2.1.21 Transformer thermal overload protection (TT>; 49T) 778
7.2.1.22 Motor start/ locked rotor monitoring (Ist>; 48/14) 778
7.2.1.23 Machine thermal overload protection (TM>; 49M) 779
7.2.1.24 Frequent start protection (N>; 66) 780
7.2.1.25 Non-directional undercurrent protection (I<; 37) 781
7.2.1.26 Mechanical jam protection (Im>; 51M) 781
7.2.1.27 Underimpedance protection (Z<; 21U) 782
7.2.1.28 Voltage-restrained overcurrent protection (Iv>; 51V) 783
7.2.1.29 100 % stator earth fault protection (U03rd>; 64S) 784
7.2.1.30 Power factor protection (PF<; 55) 785
7.2.1.31 Volts-per-hertz overexcitation protection (V/Hz>; 24) 786
7.2.1.32 Underexcitation protection (Q<; 40) 786
7.2.1.33 Transformer status monitoring 787
7.2.1.34 Generator/motor/transformer differential protection (Idb>/Idi>/I0dHV>/I0dLV>; 87T/87G/87M/87N) 788
7.2.1.35 Line differential protection (Idb>/Idi>; 87L) 789
7.2.1.36 Distance protection (Z<;21) 790
7.2.1.37 Arc fault protection (IArc>/I0Arc>; 50Arc/50NArc) (optional) 790
7.2.2 Control functions 791
7.2.2.1 Automatic voltage regulator (90) 791
7.2.2.2 Setting group selection 792
7.2.2.3 Object control and monitoring 792
7.2.2.4 Indicator object monitoring 793
7.2.2.5 Cold load pick-up (CLPU) 794
7.2.2.6 Switch-on-to-fault (SOTF) 794
7.2.2.7 Auto-reclosing (0 → 1; 79) 795
7.2.2.8 Zero sequence recloser (79N) 796

7.2.2.9 Vector jump (Δφ; 78) 796
7.2.2.10 Synchrocheck (ΔV/Δa/Δf; 25) 797
7.2.3 Monitoring functions 797
7.2.3.1 Current transformer supervision 797
7.2.3.2 Voltage transformer supervision (60) 798
7.2.3.3 Circuit breaker wear monitoring 799
7.2.3.4 Current total harmonic distortion 799
7.2.3.5 Fault locator (21FL) 800
7.2.3.6 Event logger 801
7.2.3.7 Disturbance recorder 801
7.3 Tests and environmental 801
8 Ordering information 805
9 Contact and reference information 807

© Arcteq Relays Ltd

Disclaimer

Please read these instructions carefully before using the equipment or taking any other actions with respect to the equipment. Only trained and qualified persons are allowed to perform installation, operation, service or maintenance of the equipment. Such qualified persons have the responsibility to take all appropriate measures, including e.g. use of authentication, encryption, anti-virus programs, safe switching programs etc. necessary to ensure a safe and secure environment and usability of the equipment. The warranty granted to the equipment remains in force only provided that the instructions contained in this document have been strictly complied with.

Nothing contained in this document shall increase the liability or extend the warranty obligations of the manufacturer Arcteq Relays Ltd. The manufacturer expressly disclaims any and all liability for any damages and/or losses caused due to a failure to comply with the instructions contained herein or caused by persons who do not fulfil the aforementioned requirements. Furthermore, the manufacturer shall not be liable for possible errors in this document.

Please note that you must always comply with applicable local legislation and regulations. The manufacturer gives no warranties that the content of this document is in all respects in line with local laws and regulations and assumes no liability for such possible deviations.

You are advised to notify the manufacturer in case you become aware of any errors in this document or of defects in the equipment.

The manufacturer reserves the right to update or amend this document at any time.

Copyright

Copyright © Arcteq Relays Ltd. 2026. All rights reserved.

1 Document information

1.1 Version 1 revision notes

Table. 1.1 - 1. Version 1 revision notes

Revision	1.00
Date	2.6.2026
Changes	• The first revision.

1.2 Safety information

This document contains important instructions that should be saved for future use. Read the document carefully before installing, operating, servicing, or maintaining this equipment. Please read and follow all the instructions carefully to prevent accidents, injury and damage to property.

Additionally, this document may contain four (4) types of special messages to call the reader's attention to useful information as follows:



NOTICE!
"Notice" messages indicate relevant factors and conditions to the concept discussed in the text, as well as to other relevant advice.

CAUTION!
"Caution" messages indicate a potentially hazardous situation which, if not avoided, **could** result in minor or moderate personal injury, in equipment/property damage, or software corruption.



WARNING!
"Warning" messages indicate a potentially hazardous situation which, if not avoided, **could** result in death or serious personal injury as well as serious damage to equipment/property.



DANGER!
"Danger" messages indicate an imminently hazardous situation which, if not avoided, **will** result in death or serious personal injury.

These symbols are added throughout the document to ensure all users' personal safety and to avoid unintentional damage to the equipment or connected devices.

Please note that although these warnings relate to direct damage to personnel and/or equipment, it should be understood that operating damaged equipment may also lead to further, indirect damage to personnel and/or equipment. Therefore, we expect any user to fully comply with these special messages.

© Arcteq Relays Ltd

1.3 Abbreviations

AI – Analog input

AR – Auto-recloser

ASDU – Application service data unit

AVR – Automatic voltage regulator

BCD – Binary-coded decimal

CB – Circuit breaker

CBFP – Circuit breaker failure protection

CLPU – Cold load pick-up

CPU – Central processing unit

CT – Current transformer

CTM – Current transformer module

CTS – Current transformer supervision

DG – Distributed generation

DHCP – Dynamic Host Configuration Protocol

DI – Digital input

DO – Digital output

DOL – Direct-on-line

DR – Disturbance recorder

DT – Definite time

FF – Fundamental frequency

FFT – Fast Fourier transform

FTP – File Transfer Protocol

GI – General interrogation

HMI – Human-machine interface

HR – Holding register

HV – High voltage

HW – Hardware

IDMT – Inverse definite minimum time

IGBT – Insulated-gate bipolar transistor

© Arcteq Relays Ltd

I/O – Input and output

IRIG-B – Inter-range instruction group, timecode B

LCD – Liquid-crystal display

LED – Light emitting diode

LV – Low voltage

NC – Normally closed

NO – Normally open

NTP – Network Time Protocol

RMS – Root mean square

RSTP – Rapid Spanning Tree Protocol

RTD – Resistance temperature detector

RTU – Remote terminal unit

SCADA – Supervisory control and data acquisition

SG – Setting group

SOTF – Switch-on-to-fault

SW – Software

THD – Total harmonic distortion

TRMS – True root mean square

VT – Voltage transformer

VTM – Voltage transformer module

VTS – Voltage transformer supervision

© Arcteq Relays Ltd

2 General

AQ-ONE is the one product designed to meet your every protection and control need — a unified concept with true scalability. One software environment defines functionality and configuration, while a single hardware platform — available in three mechanical sizes — enables cost optimization and ensures a perfect fit for any installation.

AQ-ONE is flexibly packaged and optimized for power systems up to 150 kV, while also offering a powerful and reliable solution for higher voltage grids depending on the application.

Every AQ-ONE relay operates on the same firmware and follows the same operating principles. This ensures a uniform user experience, no matter which hardware size you choose.

- Same logic and behavior in every device.
- Extensive function packages that include everything typically needed for each application.
- The relay's functionality can be expanded at any time by adding optional function packages.

All AQ-ONE relays are configured, set, and commissioned using a single tool — AQtivate — ensuring a consistent engineering workflow and reducing training needs for maintenance staff.

AQ-ONE offers function packages for a wide range of protection applications. Each package can be tailored to deliver the exact functionality your application requires. And as needs evolve, you can upgrade or switch function packages at any time to meet your new requirements.

© Arcteq Relays Ltd

3 Local panel structure

The front panel of AQ-ONE devices have multiple LEDs, control buttons and a local RJ-45 Ethernet port for configuration.

Local panel structure of AQ-ONEs small version

Figure. 3 - 1. Local panel structure of AQ-ONEs small version.

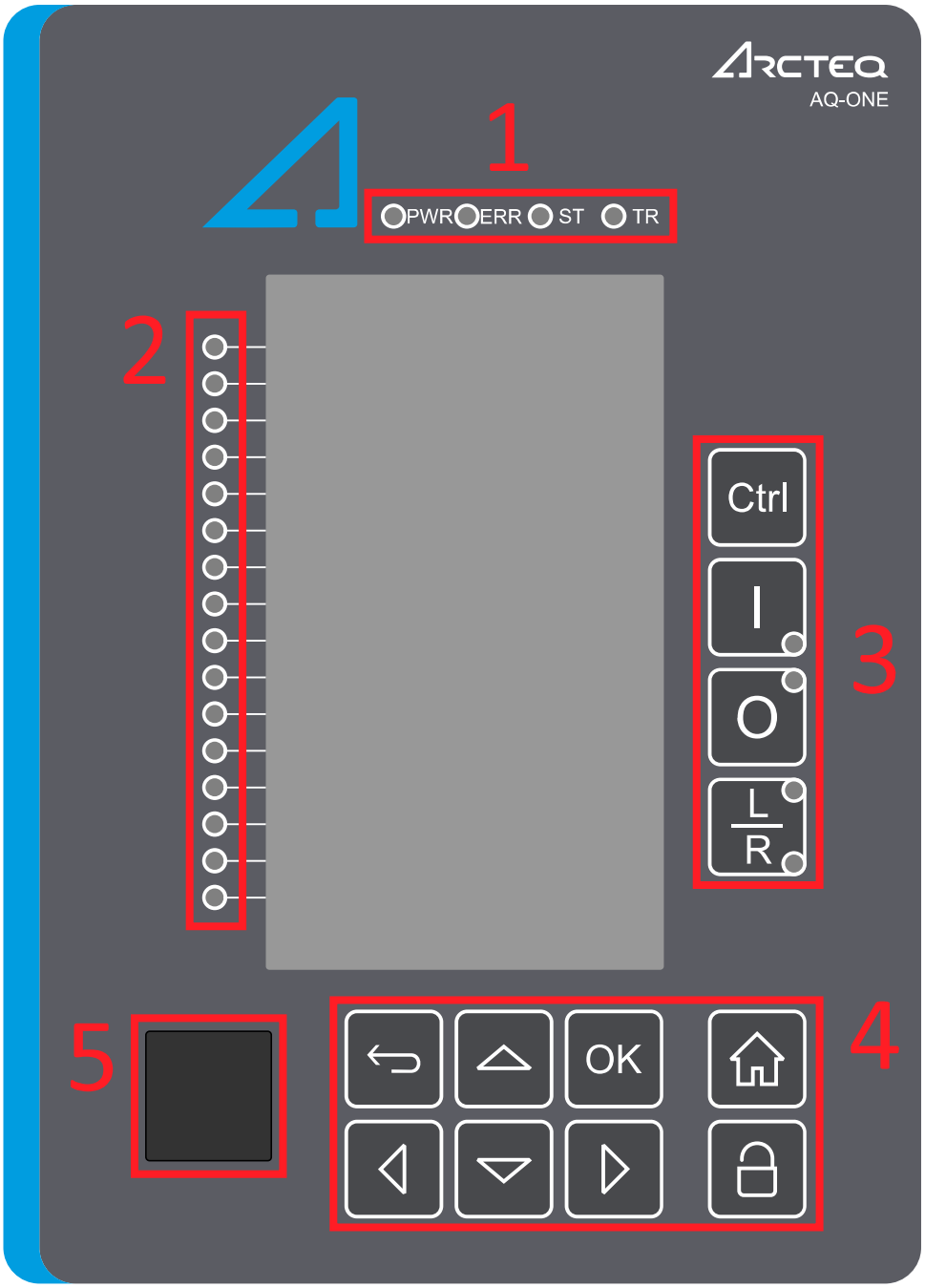

1. Four (4) default LEDs: "Power", "Error", "Start" (configurable) and "Trip" (configurable).
2. Sixteen (16) configurable LEDs (red, orange, green) with programmable legend texts.

© Arcteq Relays Ltd

3. Three (3) object control buttons: Choose the controllable object with the Ctrl button and control the breaker or other object with the I and the O buttons. The L/R button switches between the local and the remote control modes.
4. Eight (8) buttons for device local programming, navigation and control:
    - four (4) navigation buttons,
    - Back button,
    - OK button,
    - Home button for switching between user view and configuration view,
    - Lock button for accessing and setting up user levels. For more information, see "User access control" chapter.
5. One (1) RJ-45 Ethernet port for device configuration.

When the unit is powered on, the green "Power" LED is lit. When the red "Error" LED is lit, the device has an internal (hardware or software) error that affects the operation of the unit. The activation of the yellow "Start" LED and the red "Trip" LED are based on the setting the user has put in place in the software.

The sixteen freely configurable LEDs are located on the left side of the display. Their activation and color (green, orange, red) are based on the settings the user has put in place in the software.

The view in the screen is freely configurable. Virtual switches and buttons can be added which can be used to control the device's general logic locally or remotely. The status of the object (circuit breaker, disconnector) can be displayed on the screen. All measured and calculated values regardless of the magnitude catecory (current, voltage, power, energy, frequency, etc.) can be shown on the screen.

Holding the I (object control) button down for five seconds brings up the button test menu. It displays all the physical buttons on the front panel. Pressing any of the listed buttons marks them as tested. When all buttons are marked as having been tested, the device will return back to the default view.

Local panel structure of AQ-ONEs medium version

Figure. 3 - 2. Local panel structure of AQ-ONEs medium version.

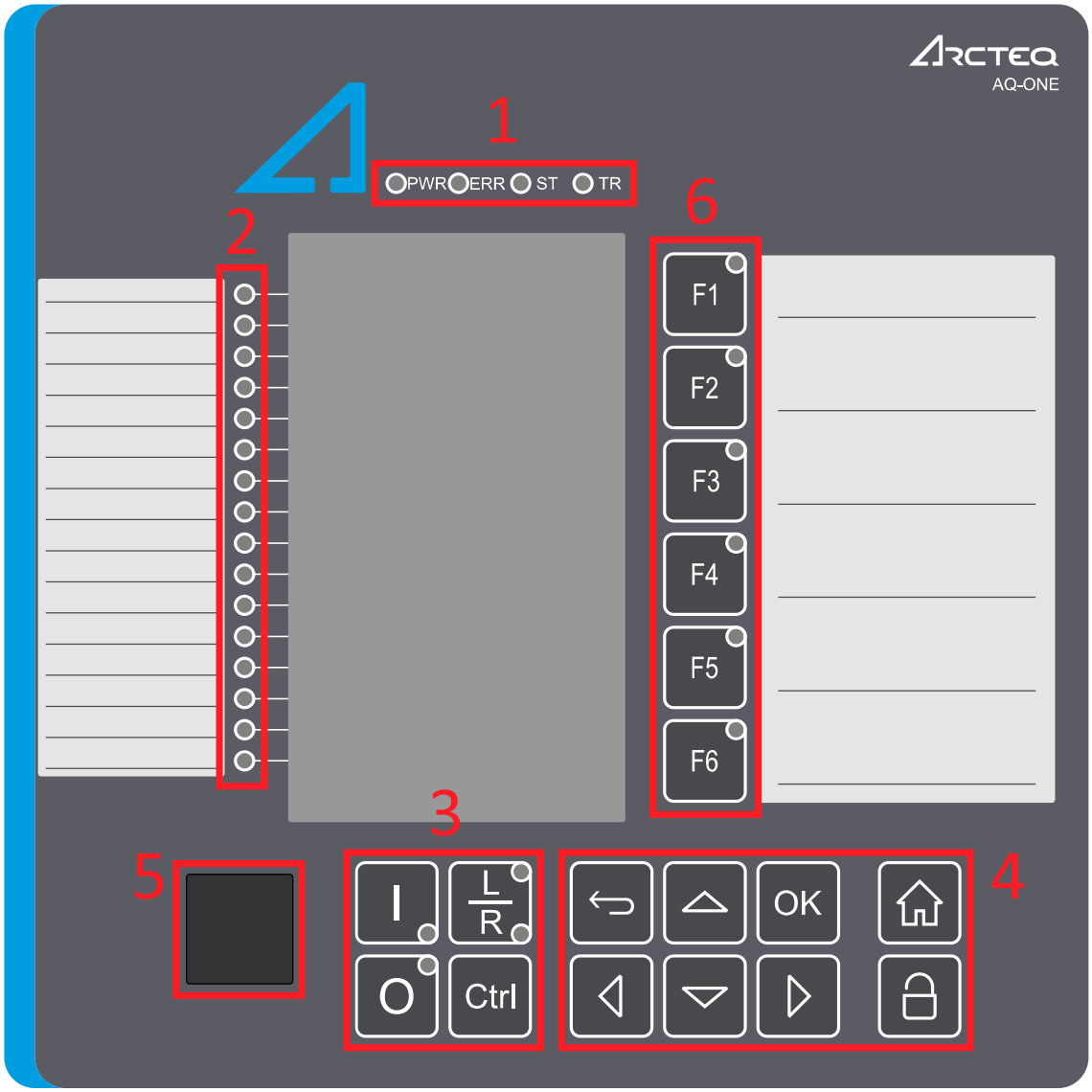

1. Four (4) default LEDs: "Power", "Error", "Start" (configurable) and "Trip" (configurable).
2. Sixteen (16) configurable LEDs (red, orange, green) with programmable legend texts and a text pocket.
3. Three (3) object control buttons: Choose the controllable object with the **Ctrl** button and control the breaker or other object with the **I** and the **O** buttons. The **L/R** button switches between the local and the remote control modes.
4. Eight (8) buttons for device local programming, navigation and control:
    - four (4) navigation buttons,
    - **Back** button,
    - **OK** button,
    - **Home** button for switching between user view and configuration view,
    - **Lock** button for accessing and setting up user levels. For more information, see "User access control" chapter.
5. One (1) RJ-45 Ethernet port for device configuration.
6. Six (6) freely configurable function buttons (F1…F6). Each button has a freely configurable LED (red, orange, green).

© Arcteq Relays Ltd

When the unit is powered on, the green "Power" LED is lit. When the red "Error" LED is lit, the device has an internal (hardware or software) error that affects the operation of the unit. The activation of the yellow "Start" LED and the red "Trip" LED are based on the setting the user has put in place in the software.

The sixteen freely configurable LEDs are located on the left side of the display. Their activation and color (green, orange, red) are based on the settings the user has put in place in the software.

The view in the screen is freely configurable. Virtual switches and buttons can be added which can be used to control the device's general logic locally or remotely. The status of the object (circuit breaker, disconnector) can be displayed on the screen. All measured and calculated values regardless of the magnitude catecory (current, voltage, power, energy, frequency, etc.) can be shown on the screen.

Holding the I (object control) button down for five seconds brings up the button test menu. It displays all the physical buttons on the front panel. Pressing any of the listed buttons marks them as tested. When all buttons are marked as having been tested, the device will return back to the default view.

Local panel structure of AQ-ONEs large version

Figure. 3 - 3. Local panel structure of AQ-ONEs large version.

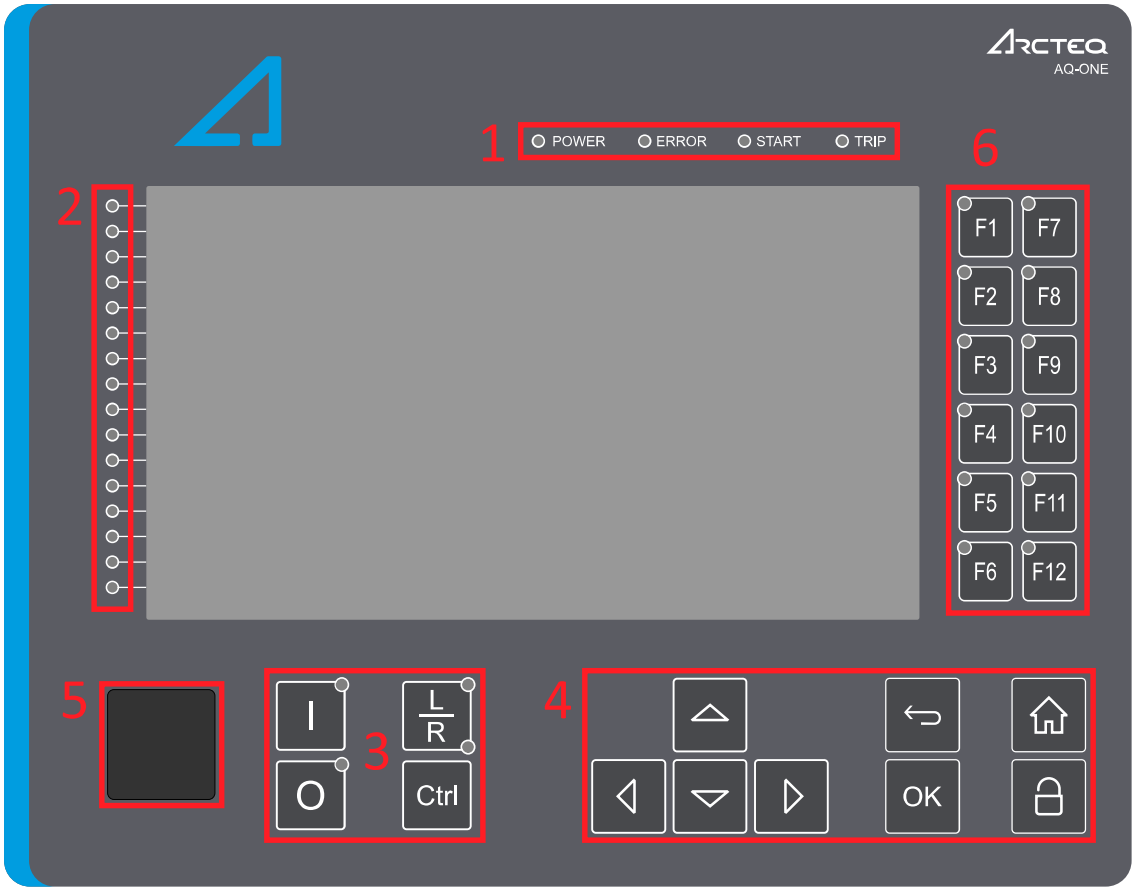

1. Four (4) default LEDs: "Power", "Error", "Start" (configurable) and "Trip" (configurable).
2. Sixteen (16) configurable LEDs (red, orange, green) with programmable legend texts.
3. Three (3) object control buttons: Choose the controllable object with the Ctrl button and control the breaker or other object with the I and the O buttons. The L/R button switches between the local and the remote control modes.

4. Eight (8) buttons for device local programming, navigation and control:
    - four (4) navigation buttons,
    - Back button,
    - OK button,
    - Home button for switching between user view and configuration view,
    - Lock button for accessing and setting up user levels. For more information, see "User access control" chapter.
5. One (1) RJ-45 Ethernet port for device configuration.
6. Twelve (12) freely configurable function buttons (F1…F12). Each button has a freely configurable LED (red, orange, green).

When the unit is powered on, the green "Power" LED is lit. When the red "Error" LED is lit, the device has an internal (hardware or software) error that affects the operation of the unit. The activation of the yellow "Start" LED and the red "Trip" LED are based on the setting the user has put in place in the software.

The sixteen freely configurable LEDs are located on the left side of the display. Their activation and color (green, orange, red) are based on the settings the user has put in place in the software.

The view in the screen is freely configurable. Virtual switches and buttons can be added which can be used to control the device's general logic locally or remotely. The status of the object (circuit breaker, disconnector) can be displayed on the screen. All measured and calculated values regardless of the magnitude catecory (current, voltage, power, energy, frequency, etc.) can be shown on the screen.

Holding the I (object control) button down for five seconds brings up the button test menu. It displays all the physical buttons on the front panel. Pressing any of the listed buttons marks them as tested. When all buttons are marked as having been tested, the device will return back to the default view.

© Arcteq Relays Ltd

4 Functions

4.1 Functions included

The device can be ordered with various combinations of function packages:

- Alarm annunciator
- Capacitor bank protection
- Power factor controller
- Feeder protection
- Motor protection
- Synchronous motor protection
- Transformer protection
- Automatic voltage regulator
- Line protection
- Line differential protection
- Distance protection
- Voltage protection
- Bay control
- Generator protection
- Synchronizer
- Power measurement
- Directional protection
- Single-phase protection

See "Ordering information" chapter to see hardware dependencies of each function package.

Full list of available functions are listed below.

Table. 4.1 - 2. General functions included in AQ-ONE devices.

Name	IEC	ANSI	Description
GNSIG	-	-	Common trip.
SGS	-	-	Setting group selection. (8 setting groups available)
MREC	-	-	Measurement recorder.
DR	-	-	Disturbance recorder.
VREC	-	-	Fault register.
OBJ	-	-	Object control and monitoring. (10 objects available)
CIN	-	-	Indicator object monitoring. (10 indicators available)
CBW	-	-	Circuit breaker wear monitor. Requires CT module.
CTS	-	-	Current transformer supervision. Requires CT module.

© Arcteq Relays Ltd

Name	IEC	ANSI	Description
THD	-	-	Current total harmonic distortion. Requires CT module.
VTS	-	60	Voltage transformer supervision. Requires VT module.
THDV	-	-	Voltage total harmonic distortion. Requires VT module.
PGS (10)	PGx>/<	99	Programmable stage. Requires VT and CT module.
ARC (1)	IArc>/I0Arc>	50Arc/50NArc	Arc fault protection. Requires arc protection module.
RTD (1...16)	-	-	RTD alarms (Resistance temperature detector). Requires RTD module.

Table. 4.1 - 3. Functions included in "alarm annunciator function" package (ALM).

Name	IEC	ANSI	Description
ALARM	-	-	Alarming function (128 alarms).

Table. 4.1 - 4. Functions included in "synchronizer" function package (SYN).

Name	IEC	ANSI	Description
GSYN	ΔV/Δa/Δf	25	Synchronizer.

Table. 4.1 - 5. Functions included in "single-phase function" package (PHW).

Name (number of stages)	IEC	ANSI	Description
NOCS (2)	IPW> IPW>>	50/51	Single-pole non-directional overcurrent protection.
OBJS	-	-	Single-pole object control and monitoring.

Table. 4.1 - 6. Functions included in "automatic voltage regulator" function package (AVR).

Name	IEC	ANSI	Description
VRG	-	90	Automatic voltage regulator (independent or parallel).

Table. 4.1 - 7. Functions included in "power factor controller" function package (PFC).

Name	IEC	ANSI	Description
PFC	-	55	Power factor controller.

© Arcteq Relays Ltd

Table. 4.1 - 8. Functions included in "feeder protection" function package (FDR).

Name	IEC	ANSI	Description
NOC (4)	I> I>> I>>> I>>>>	50/51	Non-directional overcurrent protection.
NEF (4)	I0> I0>> I0>>> I0>>>>	50N/ 51N	Non-directional earth fault protection.
CUB (4)	I2> I2>> I2>>> I2>>>>	46/ 46R/ 46L	Negative sequence overcurrent/ phase current reversal/ current unbalance protection.
HOC (4)	Ih> Ih>> Ih>>> Ih>>>>	50H/ 51H/ 68H	Harmonic overcurrent protection. The detection and blocking or tripping based on a selectable harmonic. The phase currents and the residual currents have separate stages.
REF (1)	I0d>	87N	Low-impedance or high-impedance restricted earth fault/ cable end differential protection.
CBFP	CBFP	50BF/ 52BF	Circuit breaker failure protection.
TOLF (1)	TF>	49F	Line thermal overload protection.
SOTF	SOTF	-	Switch-on-to-fault.
AR	0 → 1	79	Auto-recloser.
CLPU	CLPU	-	Cold load pick-up.

Table. 4.1 - 9. Functions included in "voltage protection" function package (VOL).

Name	IEC	ANSI	Description
NOV (4)	U0> U0>> U0>>> U0>>>>	59N	Neutral overvoltage protection.
OV (4)	U> U>> U>>> U>>>>	59	Overvoltage protection.
UV (4)	U< U<< U<<< U<<<<	27	Undervoltage protection.
LVRT (1)	LVRT	27T	Low-voltage ride-through.

Name	IEC	ANSI	Description
VUB (4)	U1/U2>/< U1/U2>>/<< U1/U2>>>/<<< U1/U2>>>>/<<<<<	47/27P/59PN	Sequence voltage protection.
FRQV (8)	f> f>> f>>> f>>>> f< f<< f<<< f<<<<<	81O/81U	Overfrequency and underfrequency protection.
ROCOF (8)	df/dt>/< (1…8)	81R	Rate-of-change of frequency.
VHZ (1)	V/Hz>	24	Volts-per-hertz overexcitation protection.
VJP	Δφ	78	Vector jump.
OOS (1)	Pslip	78	Pole slip protection.
LSH	-	81LSH	Load shedding.
NJK	-	79N	Zero sequence recloser.
SYN	ΔV/Δa/Δf	25	Synchrocheck.

Table. 4.1 - 10. Functions included in "capacitor bank protection" function package (CAP).

Name	IEC	ANSI	Description
CPB (1)	-	-	Capacitor bank module.
COL (2)	Icol> Icol>>	49OL	Capacitor bank overload protection.
CNU (1)	Cnu>	50UB	Capacitor bank neutral unbalance protection.
UCP (1)	Iuc>	46C	Capacitor bank current unbalance protection.
NOC (4)	I> I>> I>>> I>>>>	50/51	Non-directional overcurrent protection.
NEF (4)	I0> I0>> I0>>> I0>>>>	50N/ 51N	Non-directional earth fault protection.
CUB (4)	I2> I2>> I2>>> I2>>>>	46/ 46R/ 46L	Negative sequence overcurrent/ phase current reversal/ current unbalance protection.

© Arcteq Relays Ltd

Name	IEC	ANSI	Description
HOC (4)	Ih> Ih>> Ih>>> Ih>>>>	50H/ 51H/ 68H	Harmonic overcurrent protection. The detection and blocking or tripping based on a selectable harmonic. The phase currents and the residual currents have separate stages.
REF (1)	I0d>	87N	Low-impedance or high-impedance restricted earth fault/ cable end differential protection.
CBFP	CBFP	50BF/ 52BF	Circuit breaker failure protection.

Table. 4.1 - 11. Functions included in "generator protection" function package (GEN).

Name	IEC	ANSI	Description
NOC (4)	I> I>> I>>> I>>>>	50/51	Non-directional overcurrent protection.
NEF (4)	I0> I0>> I0>>> I0>>>>	50N/ 51N	Non-directional earth fault protection.
CUB (4)	I2> I2>> I2>>> I2>>>>	46/ 46R/ 46L	Negative sequence overcurrent/ phase current reversal/ current unbalance protection.
HOC (4)	Ih> Ih>> Ih>>> Ih>>>>	50H/ 51H/ 68H	Harmonic overcurrent protection. The detection and blocking or tripping based on a selectable harmonic. The phase currents and the residual currents have separate stages.
REF (1)	I0d>	87N	Low-impedance or high-impedance restricted earth fault/ cable end differential protection.
CBFP	CBFP	50BF/ 52BF	Circuit breaker failure protection.
DOC (4)	Idir> Idir>> Idir>>> Idir>>>>	67	Directional overcurrent protection.
DEF (4)	I0dir> I0dir>> I0dir>>> I0dir>>>>	67N/ 32N	Directional earth fault protection.
IEF (1)	I0int>	67NT	Intermittent earth fault protection.

Name	IEC	ANSI	Description
PQS (4)	P, Q, S>/< P, Q, S>>/< P, Q, S>>>/<<< P, Q, S>>>>/<<<<	32	Power protection.
NOV (4)	U0> U0>> U0>>> U0>>>>	59N	Neutral overvoltage protection.
OV (4)	U> U>> U>>> U>>>>	59	Overvoltage protection.
UV (4)	U< U<< U<<< U<<<<	27	Undervoltage protection.
LVRT (1)	LVRT	27T	Low-voltage ride-through.
VUB (4)	U1/U2>/< U1/U2>>/<< U1/ U2>>>/<<< U1/ U2>>>>/<<<<	47/ 27P/ 59PN	Sequence voltage protection.
FRQV (8)	f> f>> f>>> f>>>> f< f<< f<<< f<<<<	81O/ 81U	Overfrequency and underfrequency protection.
ROCOF (8)	df/dt>/< (1…8)	81R	Rate-of-change of frequency.
GST	-	-	Generator status monitoring.
VHZ (1)	V/Hz>	24	Volts-per-hertz overexcitation protection.
OOS (1)	Pslip	78	Pole slip protection.
TOLM (1)	TM>	49M	Machine thermal overload protection.
SEF (1)	U03rd<	64S	100 % stator earth fault protection.
UEX (1)	Q<	40	Underexcitation protection.
UIM (2)	Z< Z<<	21U	Underimpedance protection.

© Arcteq Relays Ltd

Name	IEC	ANSI	Description
URX (2)	X< X<<	21/40	Underreactance protection.
VOC (1)	Iv>	51V	Voltage-restrained overcurrent protection.
IAE (1)	I>U<IAE	50/27	Inadvertent energizing protection.
UPF (1)	PF<	55	Power factor protection.
SYN	ΔV/Δa/Δf	25	Synchrocheck.
OOS (1)	Pslip	-	Pole slip protection.
VJP	Δφ	78	Vector jump.
LSH	-	81LSH	Load shedding.
NJK	-	79N	Zero sequence recloser.
RHC	-	-	Running hour counter.

Table. 4.1 - 12. Functions included in "motor protection" function package (MOT).

Name	IEC	ANSI	Description
NOC (4)	I> I>> I>>> I>>>>	50/51	Non-directional overcurrent protection.
NEF (4)	I0> I0>> I0>>> I0>>>>	50N/ 51N	Non-directional earth fault protection.
CUB (4)	I2> I2>> I2>>> I2>>>>	46/ 46R/ 46L	Negative sequence overcurrent/ phase current reversal/ current unbalance protection.
HOC (4)	Ih> Ih>> Ih>>> Ih>>>>	50H/ 51H/ 68H	Harmonic overcurrent protection. The detection and blocking or tripping based on a selectable harmonic. The phase currents and the residual currents have separate stages.
REF (1)	I0d>	87N	Low-impedance or high-impedance restricted earth fault/ cable end differential protection.
CBFP	CBFP	50BF/ 52BF	Circuit breaker failure protection.
MST	-	-	Motor status monitoring.
TOLM (1)	TM>	49M	Machine thermal overload protection.

Name	IEC	ANSI	Description
LCR (1)	Ist>	48/14	Motor startup/locked rotor monitoring.
FSP (1)	N>	66	Frequent start protection.
NUC (1)	I<	37	Non-directional undercurrent protection.
MJP (1)	Im>	51M	Mechanical jam protection.
RHC	-	-	Running hour counter.

Table. 4.1 - 13. Functions included in "transformer protection" function package (TRF).

Name	IEC	ANSI	Description
NOC (4)	I> I>> I>>> I>>>>	50/51	Non-directional overcurrent protection.
NEF (4)	I0> I0>> I0>>> I0>>>>	50N/ 51N	Non-directional earth fault protection.
CUB (4)	I2> I2>> I2>>> I2>>>>	46/ 46R/ 46L	Negative sequence overcurrent/ phase current reversal/ current unbalance protection.
HOC (4)	Ih> Ih>> Ih>>> Ih>>>>	50H/ 51H/ 68H	Harmonic overcurrent protection. The detection and blocking or tripping based on a selectable harmonic. The phase currents and the residual currents have separate stages.
REF (1)	I0d>	87N	Low-impedance or high-impedance restricted earth fault/ cable end differential protection.
CBFP	CBFP	50BF/ 52BF	Circuit breaker failure protection.
TRF	-	-	Transformer status monitoring.
TOLT (1)	TT>	49T	Transformer thermal overload protection.
RHC	-	-	Running hour counter.

© Arcteq Relays Ltd

Table. 4.1 - 14. Functions included in "line protection" function package (LPM).

Name	IEC	ANSI	Description
NOC (4)	I> I>> I>>> I>>>>	50/51	Non-directional overcurrent protection.
NEF (4)	I0> I0>> I0>>> I0>>>>	50N/ 51N	Non-directional earth fault protection.
CUB (4)	I2> I2>> I2>>> I2>>>>	46/ 46R/ 46L	Negative sequence overcurrent/ phase current reversal/ current unbalance protection.
HOC (4)	Ih> Ih>> Ih>>> Ih>>>>	50H/ 51H/ 68H	Harmonic overcurrent protection. The detection and blocking or tripping based on a selectable harmonic. The phase currents and the residual currents have separate stages.
REF (1)	I0d>	87N	Low-impedance or high-impedance restricted earth fault/ cable end differential protection.
CBFP	CBFP	50BF/ 52BF	Circuit breaker failure protection.
TOLF (1)	TF>	49F	Line thermal overload protection.
SOTF	SOTF	-	Switch-on-to-fault.
AR	AR	79	Auto-recloser.
CLPU	CLPU	-	Cold load pick-up.
LPM	-	-	Line protection module.
PVPS	-	85	Teleprotection.

Table. 4.1 - 15. Functions included in "bay control" function package (BCU).

Name	IEC	ANSI	Description
CIN (11…20)	-	-	10 additional indicator objects.
AR	0 → 1	79	Auto-recloser.
SYN	ΔV/Δa/Δf	25	Synchrocheck.

Table. 4.1 - 16. Functions included in "directional" function package (DIR).

Name	IEC	ANSI	Description
DOC (4)	Idir> Idir>> Idir>>> Idir>>>>	67	Directional overcurrent protection.
DEF (4)	I0dir> I0dir>> I0dir>>> I0dir>>>>	67N/32N	Directional earth fault protection.
IEF (1)	I0int>	67NT	Intermittent earth fault protection.
NOV (4)	U0> U0>> U0>>> U0>>>>	59N	Neutral overvoltage protection.
PQS (4)	P, Q, S>/< P, Q, S>>/<< P, Q, S>>>/<<< P, Q, S>>>>/<<<<	32	Power protection.
FLX	-	21FL	Fault locator

Table. 4.1 - 17. Functions included in "synchronous machine" function package (SMT).

Name	IEC	ANSI	Description
UEX (1)	Q<	40	Underexcitation protection.
UIM (2)	Z< Z<<	21U	Underimpedance protection.
URX (2)	X< X<<	40	Underreactance protection.
VOC (1)	Iv>	51V	Voltage-restrained overcurrent protection.
IAE (1)	I>U<IAE	50/27	Inadvertent energizing protection.
UPF (1)	PF<	55	Power factor protection.

Table. 4.1 - 18. Functions included in "line differential" function package "LDF".

Name	IEC	ANSI	Description
LDIF1	IdL>	87L	Line differential protection.

Table. 4.1 - 19. Functions included in "differential" application package (DIF).

Name	IEC	ANSI	Description
DIF1	Idb>/Idi>/I0dHV>/I0dLV>	87T/87G/ 87M/87N	Generator/ motor / transformer differential protection with integrated restricted earth fault protection.

© Arcteq Relays Ltd

Table. 4.1 - 20. Functions included in "power measurement" function package (POW).

Name	IEC	ANSI	Description
RHC	-	-	Running hour counter.

Table. 4.1 - 21. Functions included in "distance protection" function package (DIS).

Name	IEC	ANSI	Description
DPP (10)	Z<	21	Distance protection.
OOS (1)	-	66/78	Power swing blocking and out of step tripping.

4.2 Measurements

4.2.1 Current measurement and scaling

The current measurement module (CT module, or CTM) is used for measuring the currents from current transformers. The current measurements are updated every 5 milliseconds. The measured values are processed into the measurement database and they are used by measurement and protection functions. It is essential to understand the concept of current measurements to be able to get correct measurements.



NOTICE!
This chapter describes the configuration and connections of the CT module in a device equipped with a single CT module. The following chapter covers the corresponding configuration and connections for devices with two CT modules.

Figure. 4.2.1 - 4. Current measurement terminology.

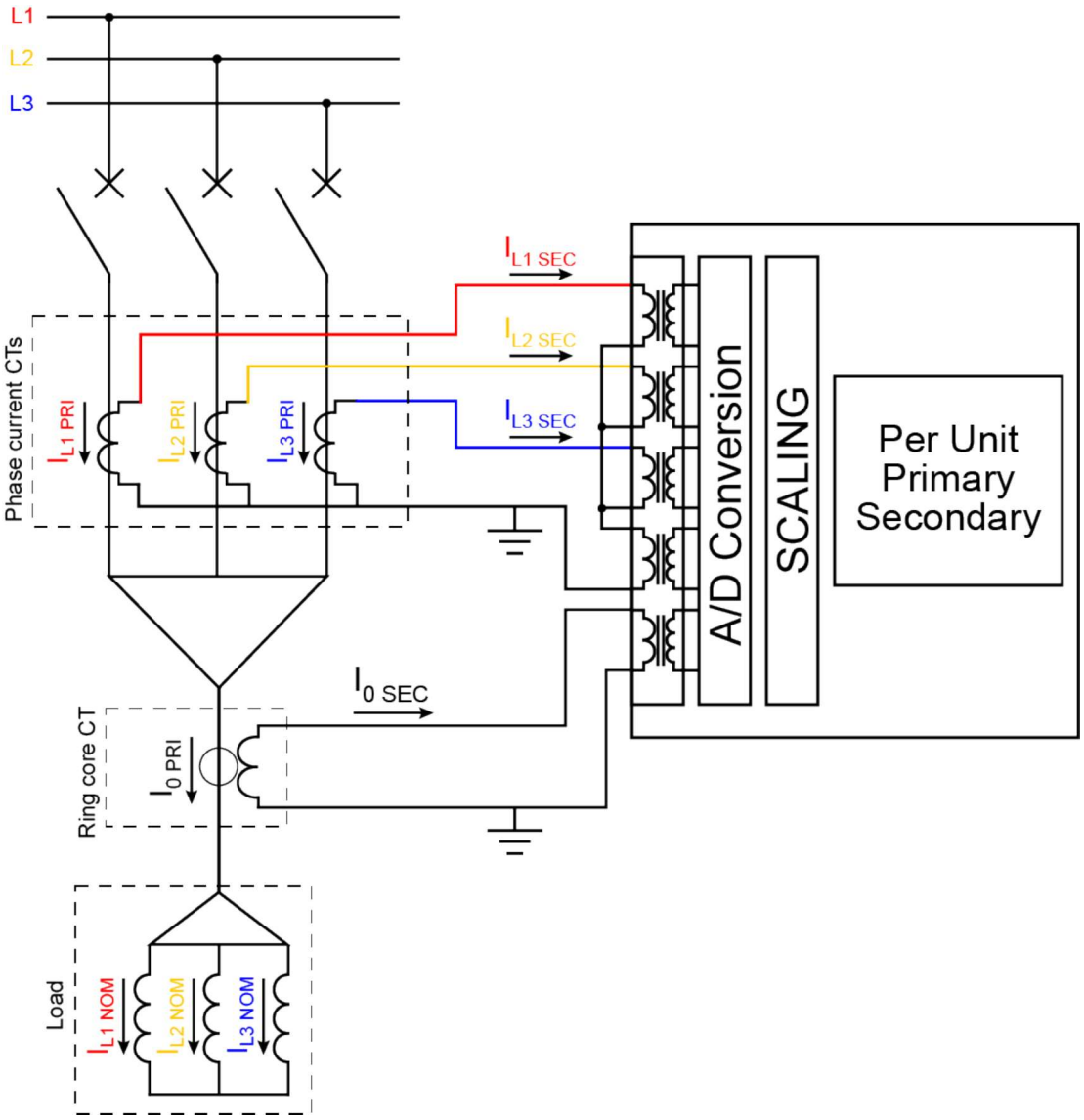

PRI: The primary current, i.e. the current which flows in the primary circuit and through the primary side of the current transformer.

SEC: The secondary current, i.e. the current which the current transformer transforms according to its ratios. This current is measured by the device.

NOM: The nominal primary current of the protected object.

For the measurements to be correct the user needs to ensure that the measurement signals are connected to the correct inputs, that the current direction is connected to the correct polarity, and that the scaling is set according to the nominal values of the current transformer.

© Arcteq Relays Ltd
IM00099

The device calculates the scaling factors based on the set values of the CT primary, the CT secondary and the nominal current settings. The device measures the secondary current, the current output from the current transformer installed into application's primary circuit. The rated primary and secondary currents of the CT need to be set for the device to "know" the primary and per-unit values. With motors and other specific electrical apparatus protections, the motor's nominal current should be set for the values to be in per unit with regards to the apparatus nominal instead of the CT nominal. This is not always mandatory as some devices still require manual calculations for the correct settings; however, setting the motors nominal current makes motor protection much easier and more straightforward. In modern protection devices this scaling calculation is done internally after the current transformer's primary current, secondary current and motor nominal current are set.

Example of CT scaling

The following figure presents how CTs are connected to the device's measurement inputs. It also shows example CT ratings and nominal current of the load.

Figure. 4.2.1 - 5. Connections.

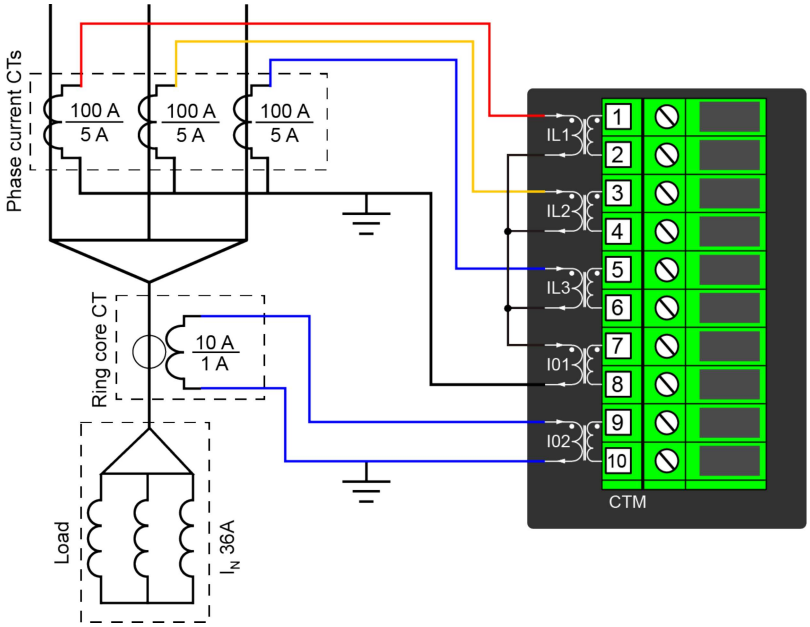

The following table presents the initial data of the connection.

Table. 4.2.1 - 22. Initial data.

Phase current CT: • CT primary: 100 A • CT secondary: 5 A	Ring core CT in Input I02: • I0CT primary: 10 A • I0CT secondary: 1 A	Load (nominal): 36 A
• The phase currents are connected to the I01 residual via a Holmgren connection. • The starpoint of the phase current CT's secondary current is towards the line.		

Phase CT scaling

Next, to scale the current to per-unit values, we have to select whether the basis of the phase CT scaling is the protected object's nominal current or the CT primary value.

If the CT values are chosen to be the basis for the per-unit scaling, the option "CT nom. p.u." is selected for the "Scale meas to In" setting (see the image below).

Figure. 4.2.1 - 6. Setting the phase current transformer scalings to CT nominal.

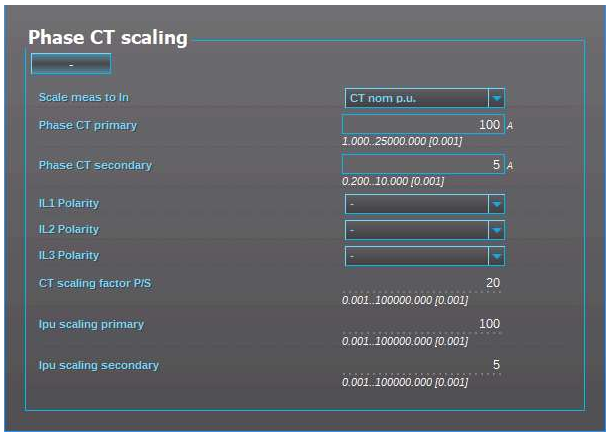

Once the setting have been sent to the device, device calculates the scaling factors and displays them for the user. The "CT scaling factor P/S" describes the ratio between the primary current and the secondary current. The per-unit scaling factors ("Ipu scaling") for both primary and secondary values are also displayed (in this case they are the set primary and secondary currents of the CT).

If the protected object's nominal current is chosen to be the basis for the per-unit scaling, the option "Object in p.u." is selected for the "Scale meas to In" setting (see the image below).

Figure. 4.2.1 - 7. Setting the phase current transformer scalings to the protected object's nominal current.

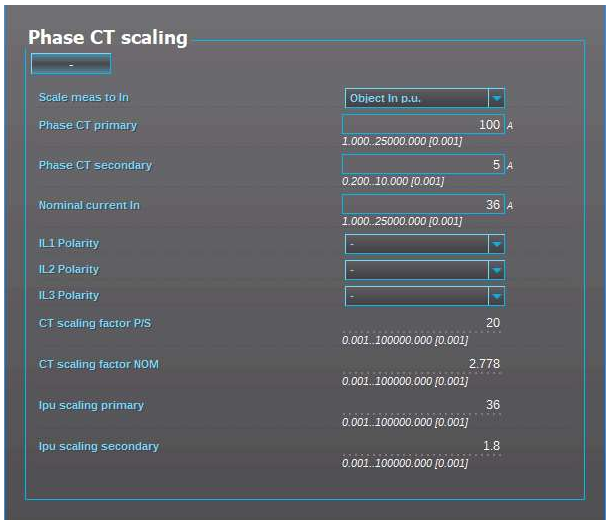

Once the measurement scaling is tied to the protected object's nominal current, the user must set the appropriate input for the "Nominal current In" setting. One can now see the differences between the two scaling options (CT nominal vs. object nominal). The "CT scaling factor P/S" is the direct ratio between the set CT current values, and the "CT scaling factor NOM" is now the ratio between the set CT primary and the nominal current. The "Ipu scaling primary" is now equal to the set nominal current, and the "Ipu scaling secondary" is the ratio between the nominal current and the "CT scaling factor P/S".

Residual I0 CT scaling

Next, we set the residual IO CT scalings according to how the phase current CTs and the ring core CT are connected to the module (see the Connections image at the beginning of this chapter).

© Arcteq Relays Ltd

The phase current CTs are connected to the module via a Holmgren (summing) connection, which requires the use of coarse residual current measurement settings: the "I01 CT" settings are set according to the phase current CTs' ratings (100/5 A).

Figure. 4.2.1 - 8. Residual I01 CT scaling (coarse).

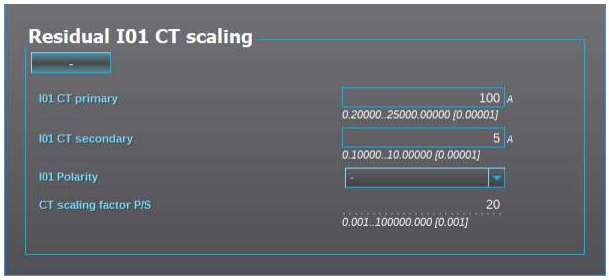

The ring core CT is connected to the CTM directly, which requires the use of sensitive residual current measurement settings: the "I02 CT" settings are set according to the ring core CT's ratings (10/1 A).

Figure. 4.2.1 - 9. Residual I02 CT scaling (sensitive).

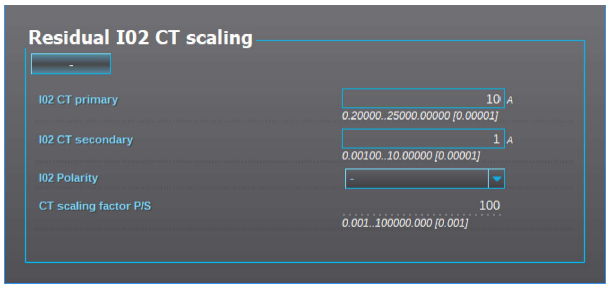

Displaying the scaling

Depending on whether the scaling was done based on the CT primary values or the protected object's nominal current, the measurements are displayed slightly differently. The first of the two images shows how the measurements are displayed when the CT primary values are the basis for the scaling; the second shows them when the protected object's nominal current is the basis for the scaling.

Figure. 4.2.1 - 10. Scalings display (based on the CT nominal).

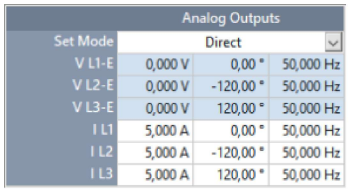

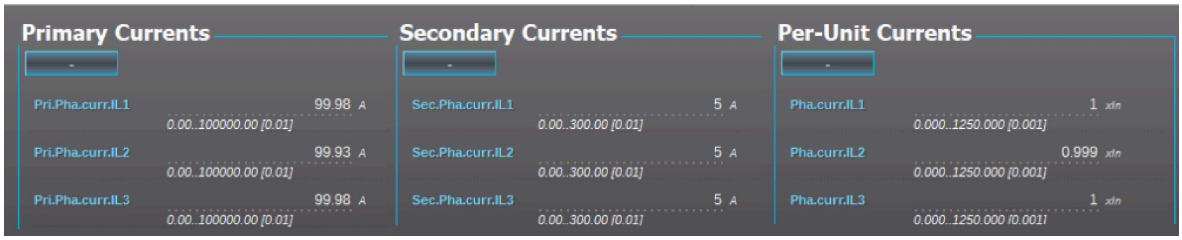

Figure. 4.2.1 - 11. Scalings display (based on the protected object's nominal current).

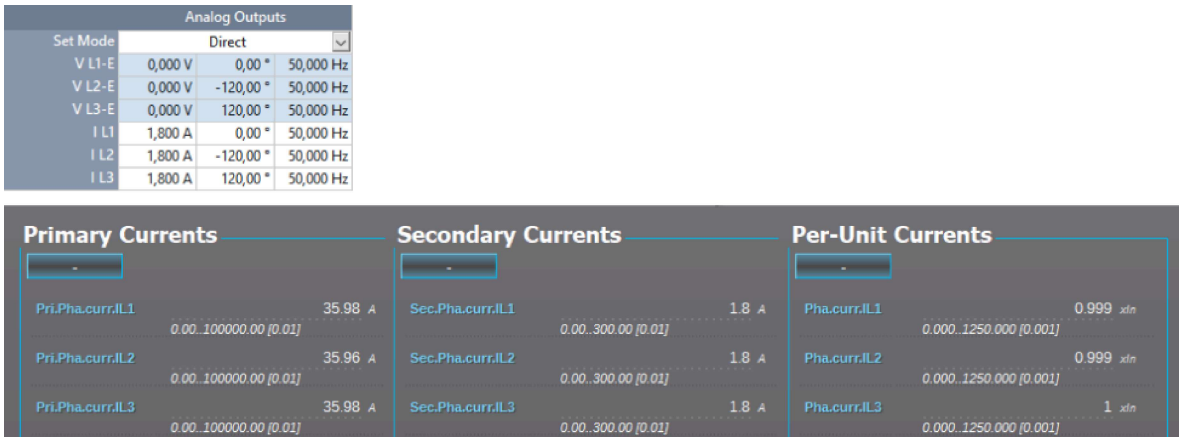

As the images above show, the scaling selection does not affect how primary and secondary currents are displayed (as actual values). The only effect is that the per-unit system in the device is scaled either to the CT nominal or to the object nominal, making the settings input straightforward.

Example of zero sequence CT scaling

Zero sequence CT scaling (ZCT scaling) is done when a zero sequence CT instead of a ring core CT is part of the measurement connection. In such a case the zero sequence CT should be connected to the I02 channel which has lower CT scaling ranges (see the image below).

Figure. 4.2.1 - 12. Connections of ZCT scaling.

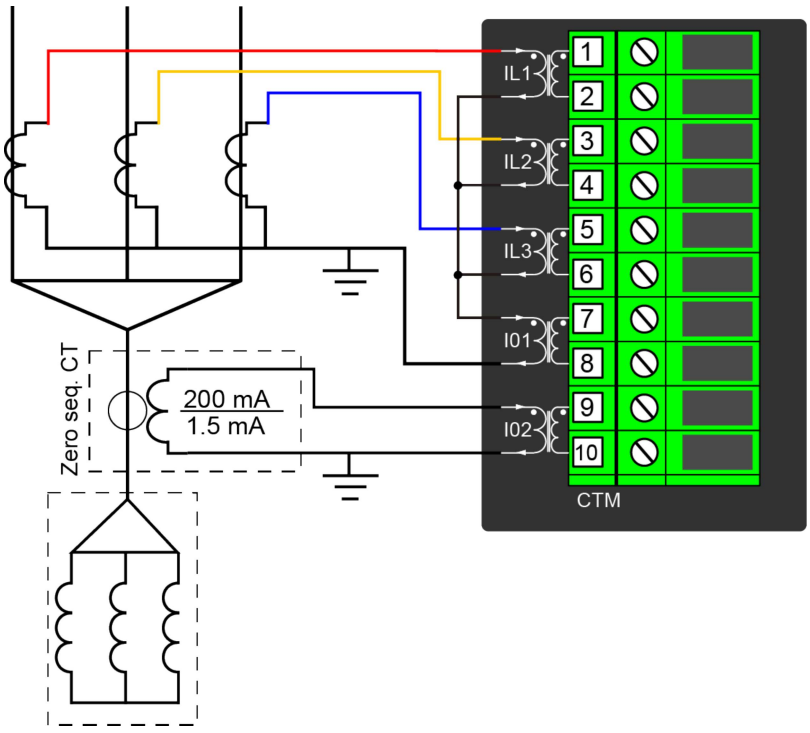

Troubleshooting

When the measured current values differ from the expected current values, the following table offers possible solutions for the problems.

© Arcteq Relays Ltd

WARNING!
If you work with energized CTs, extreme caution needs to be taken when checking the connections! An opened CT secondary circuit may generate dangerously high voltages. A "buzzing" sound from the connector can indicate an open circuit.

Problem	Solution
The measured current amplitude in all phases does not match the injected current.	The scaling settings may be wrong, check that the settings match with the connected current transformer (*Measurement → Transformers → Phase CT scaling*). Also check that the "Scale meas. to In" is set accordingly. If possible, check the actual CTs and their ratings as there may have been a need to change the original plan.
The measured current amplitude does not match one of the measured phases./ The calculated I0 is measured even though it should not.	Check the wiring connections between the injection device or the CTs and the device.
The measured current amplitudes are OK but the angles are strange./ The phase unbalance protection trips immediately after activation./ The earth fault protection trips immediately after activation.	The phase currents are connected to the measurement module but the order or polarity of one or all phases is incorrect. In device settings, go to *Measurement → Phasors* and check the "Phase current vectors" diagram. When all connections are correct, the diagram (symmetric feeding) should look like this: 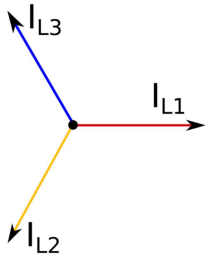 See the following tables for the most common problems with phase polarity and network rotation (mixed phases).

The following image presents the most common problems with phase polarity. Problems with phase polarity are easy to find because the vector diagram points towards the opposite polarity when a phase has been incorrectly connected.

Figure. 4.2.1 - 13. Common phase polarity problems.

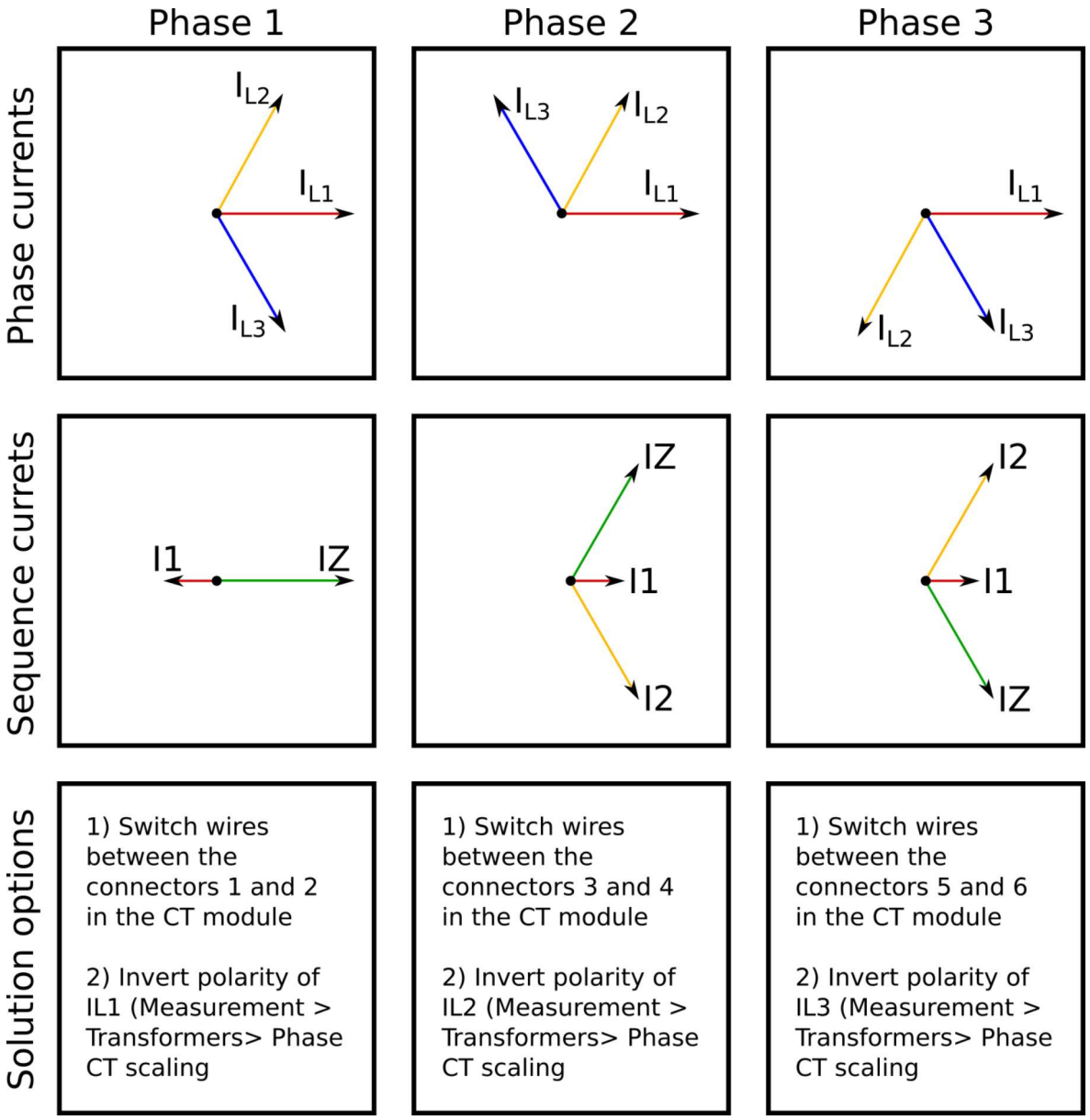

The following image presents the most common problems with network rotation (mix phases). These problems can be difficult to find because the measurement result is always the same in the device. If two phases are mixed together, the network rotation always follows the pattern IL1-IL3-IL2 and the measured negative sequence current is therefore always 1.00 (in. p.u.).

© Arcteq Relays Ltd

Figure. 4.2.1 - 14. Common network rotation (mixed phases) problems.

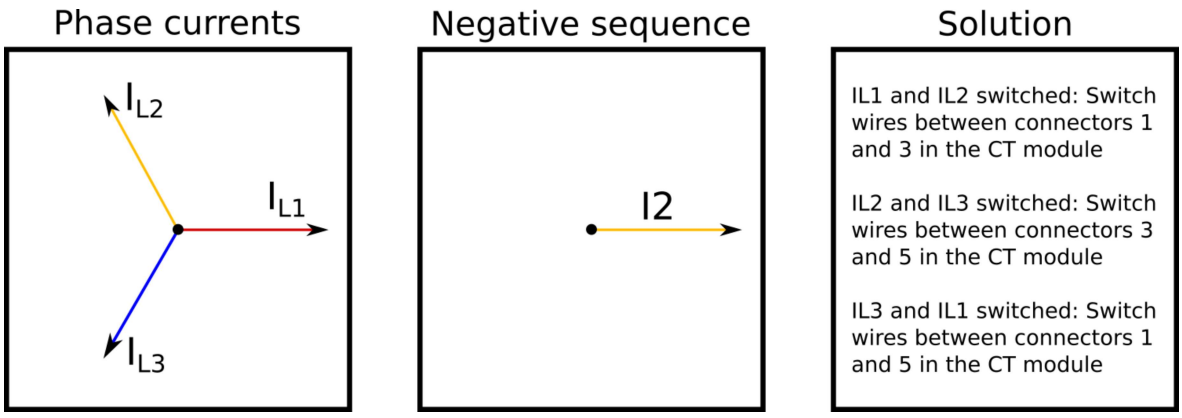

Settings

Table. 4.2.1 - 23. Settings of the Phase CT scaling.

Name	Range	Step	Default	Description
Scale measurement to In	• CT nom p.u. • Object In p.u.	-	• CT nom p.u.	The selection of the reference used in the device's per-unit system scaling. Either the set phase current CT primary or the protected object's nominal current.
Phase CT primary	1.000…25 000.000A	0.001	100.000	The rated primary current of the current transformer.
Phase CT secondary	0.200…10.000A	0.001	5.000	The rated secondary current of the current transformer.
Nominal current In	1.000…25 000.000A	0.001	100.000	The nominal current of the protected object. This setting is only visible if the option "Object In p.u." has been selected in the "Scale measurement to In" setting.
IL1 Polarity	• - • Invert	-	-	The selection of the first current measurement channel's (IL1) polarity (direction). The default setting is for the positive current to flow from connector 1 to connector 2, with the secondary currents' starpoint pointing towards the line.
IL2 Polarity	• - • Invert	-	-	The selection of the second current measurement channel's (IL2) polarity (direction). The default setting is for the positive current to flow from connector 3 to connector 4, with the secondary currents' starpoint pointing towards the line.
IL3 Polarity	• - • Invert	-	-	The selection of the third current measurement channel's (IL3) polarity (direction). The default setting is for the positive current to flow from connector 5 to connector 6, with the secondary currents' starpoint pointing towards the line.
CT scaling factor P/S	-	-	-	A feedback value; the calculated scaling factor that is the ratio between the primary current and the secondary current.

Name	Range	Step	Default	Description
CT scaling factor NOM	-	-	-	A feedback value; the calculated scaling factor that is the ratio between the set primary current and the set nominal current. This parameter is only visible if the option "Object In p.u." has been selected in the "Scale measurement to In" setting.
Ipu scaling primary	-	-	-	A feedback value; the scaling factor for the primary current's per-unit value.
Ipu scaling secondary	-	-	-	A feedback value; the scaling factor for the secondary current's per-unit value.

Table. 4.2.1 - 24. Settings of the Residual I01 CT scaling.

Name	Unit	Range	Step	Default	Description
I01 CT primary	A	0.200 00…25 000.000 00	0.000 01	100.000 00	The rated primary current of the current transformer.
I01 CT secondary	A	0.100 00…10.000 00	0.000 01	1.000 00	The rated secondary current of the current transformer.
I01 Polarity	-	• - • Invert	-	-	The selection of the coarse residual measurement channel's (I01) polarity (direction). The default setting is for the positive current to flow from connector 7 to connector 8.
CT scaling factor P/S	-	-	-	-	A feedback value; the calculated scaling factor that is the ratio between the primary current and the secondary current.

Table. 4.2.1 - 25. Settings of the Residual I02 CT scaling.

Name	Unit	Range	Step	Default	Description
I02 CT primary	A	0.200 00…25 000.000 00	0.000 01	100.000 00	The rated primary current of the current transformer.
I02 CT secondary	A	0.001 00…10.000 00	0.000 01	0.200 00	The rated secondary current of the current transformer.
I02 Polarity	-	• - • Invert	-	-	The selection of the sensitive residual measurement channel's (I02) polarity (direction). The default setting is for the positive current to flow from connector 9 to connector 10.
CT scaling factor P/S	-	-	-	-	A feedback value; the calculated scaling factor that is the ratio between the primary current and the secondary current.

Measurements

The following measurements are available in the measured current channels.

© Arcteq Relays Ltd

Table. 4.2.1 - 26. Per-unit phase current measurements.

Name	Unit	Range	Step	Description
Pha.curr.ILx	× In	0.000…1 250.000	0.001	The current fundamental frequency component (in p.u.) from each of the phase current channels.
Pha.curr.ILx TRMS	× In	0.00…1 250.00	0.01	The TRMS current (inc. harmonics up to 31st) measurement (in p.u.) from each of the phase current channels.
P-P curr.ILx	× In	0.00…500.00	0.01	The peak-to-peak current measurement (in p.u.) from each of the phase current channels.

Table. 4.2.1 - 27. Primary phase current measurements.

Name	Unit	Range	Step	Description
Pri.Pha.curr.ILx	A	0.00…1 000 000.00	0.01	The primary current measurement fundamental frequency component from each of the phase current channels.
Pha.curr.ILx TRMS Pri	A	0.00…1 000 000.00	0.01	The primary TRMS current (inc. harmonics up to 31st) measurement from each of the phase current channels.

Table. 4.2.1 - 28. Secondary phase current measurements.

Name	Unit	Range	Step	Description
Sec.Pha.curr.ILx	A	0.00…300.00	0.01	The primary current measurement fundamental frequency component from each of the phase current channels.
Pha.curr.ILx TRMS Sec	A	0.00…300.00	0.01	The primary TRMS current (inc. harmonics up to 31st) measurement from each of the phase current channels.

Table. 4.2.1 - 29. Phase angle measurements.

Name	Unit	Range	Step	Description
Pha.angle ILx	deg	0.00…360.00	0.01	The phase angle measurement from each of the three phase current inputs.

Table. 4.2.1 - 30. Per-unit residual current measurements.

Name	Unit	Range	Step	Description
Res.curr.I0x	× In	0.00…1 250.00	0.01	The current measurement fundamental frequency component (in p.u.) from the residual current channel I01 or I02.
Calculated I0	× In	0.00…1 250.00	0.01	The current measurement fundamental frequency component (in p.u.) from the calculated I0 current channel.
Res.curr.I0x TRMS	× In	0.00…1 250.00	0.01	The TRMS current (inc. harmonics up to 31st) measurement (in p.u.) from the residual current channel I01 or I02.
P-P curr.I0x	× In	0.00…500.00	0.01	The peak-to-peak current measurement (in p.u.) from the residual current channel I01 or I02.

Table. 4.2.1 - 31. Primary residual current measurements.

Name	Unit	Range	Step	Description
Pri.Res.curr.I0x	A	0.00…1 000 000.00	0.01	The primary current measurement fundamental frequency component from the residual current channel I01 or I02.
Pri.calc.I0	A	0.00…1 000 000.00	0.01	The primary current measurement fundamental frequency component from the calculated current channel I0.
Res.curr.I0x TRMS Pri	A	0.00…1 000 000.00	0.01	The TRMS current (inc. harmonics up to 31st) measurement from the primary residual current channel I01 or I02.

Table. 4.2.1 - 32. Secondary residual current measurements.

Name	Unit	Range	Step	Description
Sec.Res.curr.I0x	A	0.00…300.00	0.01	The secondary current measurement fundamental frequency component from the residual current channel I01 or I02.
Sec.calc.I0	A	0.00…300.00	0.01	The secondary current measurement fundamental frequency component from the calculated current channel I0.
Res.curr.I0x TRMS Sec	A	0.00…300.00	0.01	The secondary TRMS current (inc. harmonics up to 31st) measurement from the secondary residual current channel I01 or I02.

Table. 4.2.1 - 33. Residual phase angle measurements.

Name	Unit	Range	Step	Description
Res.curr.angle I0x	deg	0.00…360.00	0.01	The residual current angle measurement from the I01 or I02 current input.
calc.I0 Pha.angle	deg	0.00…360.00	0.01	The calculated residual current angle measurement.

Table. 4.2.1 - 34. Per-unit sequence current measurements.

Name	Unit	Range	Step	Description
Positive sequence current	× In	0.00…1 250.00	0.01	The measurement (in p.u.) from the calculated positive sequence current.
Negative sequence current	× In	0.00…1 250.00	0.01	The measurement (in p.u.) from the calculated negative sequence current.
Zero sequence current	× In	0.00…1 250.00	0.01	The measurement (in p.u.) from the calculated zero sequence current.

© Arcteq Relays Ltd

Table. 4.2.1 - 35. Primary sequence current measurements.

Name	Unit	Range	Step	Description
Pri.Positive sequence curr.	A	0.00…1 000 000.00	0.01	The primary measurement from the calculated positive sequence current.
Pri.Negative sequence curr.	A	0.00…1 000 000.00	0.01	The primary measurement from the calculated negative sequence current.
Pri.Zero sequence curr.	A	0.00…1 000 000.00	0.01	The primary measurement from the calculated zero sequence current.

Table. 4.2.1 - 36. Secondary sequence current measurements.

Name	Unit	Range	Step	Description
Sec.Positive sequence curr.	A	0.00…300.00	0.01	The secondary measurement from the calculated positive sequence current.
Sec.Negative sequence curr	A	0.00…300.00	0.01	The secondary measurement from the calculated negative sequence current.
Sec.Zero sequence curr.	A	0.00…300.00	0.01	The secondary measurement from the calculated zero sequence current.

Table. 4.2.1 - 37. Sequence phase angle measurements.

Name	Unit	Range	Step	Description
Positive sequence curr.angle	deg	0.00…360.00	0.01	The calculated positive sequence current angle.
Negative sequence curr.angle	deg	0.00…360.00	0.01	The calculated negative sequence current angle.
Zero sequence curr.angle	deg	0.00…360.00	0.01	The calculated zero sequence current angle.

Table. 4.2.1 - 38. Harmonic current measurements.

Name		Range	Step	Description
Harm Abs.or Perc.	-	• Percent • Absolute	-	Defines whether the harmonics are calculated as percentage or absolute values.
Harmonics display	-	• Per unit • Primary A • Secondary A	-	Defines how the harmonics are displayed: in p.u values, as primary current values, or as secondary current values.
Ixx maximum harmonic	A	0.00...100 000.00	0.01	Displays the maximum harmonics value of the selected current input ILx or I0x.
Ixx fundamental	A	0.00...100 000.00	0.01	Displays the current value of the fundamental frequency component (RMS) from the selected current input ILx or I0x.
Ixx harmonics (2nd...31st harmonic)	A	0.00…100 000.00	0.01	Displays the selected harmonic from the current input ILx or I0x.

Name		Range	Step	Description
Ixx Amplitude THD	%	0.000...100.000	0.001	Amplitude ratio THD voltage. Recognized by IEC.
Ixx Power THD	%	0.000...100.000	0.001	Power ratio THD voltage. Recognized by the IEEE.

4.2.2 Current measurement and scaling in differential applications

The current measurement module (CT module, or CTM) is used for measuring the currents from current transformers. The current measurements are updated every 5 milliseconds. The measured values are processed into the measurement database and they are used by measurement and protection functions. It is essential to understand the concept of current measurements to be able to get correct measurements.

Figure. 4.2.2 - 15. Current measurement terminology.

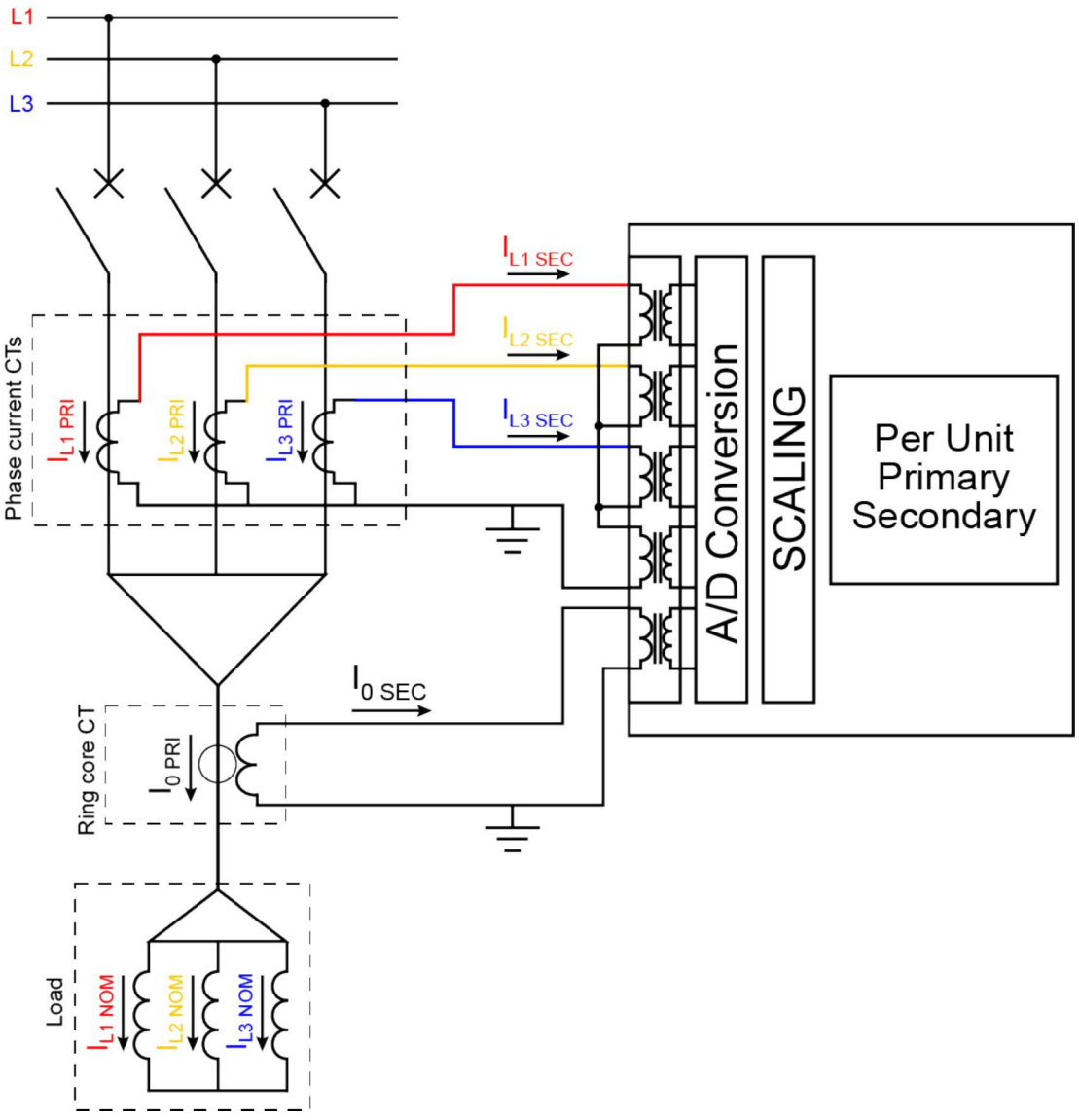

PRI: The primary current, i.e. the current which flows in the primary circuit and through the primary side of the current transformer.

© Arcteq Relays Ltd

SEC: The secondary current, i.e. the current which the current transformer transforms according to its ratios. This current is measured by the device.

NOM: The nominal primary current of the protected transformer. The nominal current on the HV side differs from that on the LV side according to the transformer voltage ratio. The nominal current is calculated based on the transformer's MVA and the nominal voltage on each winding.

For the measurements to be correct the user needs to ensure that the measurement signals are connected to the correct inputs, that the current direction is connected correctly, and that the scaling is set correctly.

The device calculates the scaling factors based on the set values of the CT primary, the CT secondary and the nominal current. The device measures the secondary current, the current output from the current transformer installed into application's primary circuit. The rated primary and secondary currents of the CT need to be set for the device to "know" the primary and per-unit values. In power transformers, the protected unit's nominal current in both windings is calculated based on the given nominal power (MVA) and the nominal voltage. The settings can only give the apparatus nominal in p.u. (per-unit) when the nominal current is known. Also, knowing what the transformer's nominal current is makes the unit protection much easier and more straightforward to configure. In modern protection devices this scaling calculation is done internally after the current transformer's primary current, secondary current and machine nominal current are set.

Figure. 4.2.2 - 16. Nominal current calculation in differential protection devices.

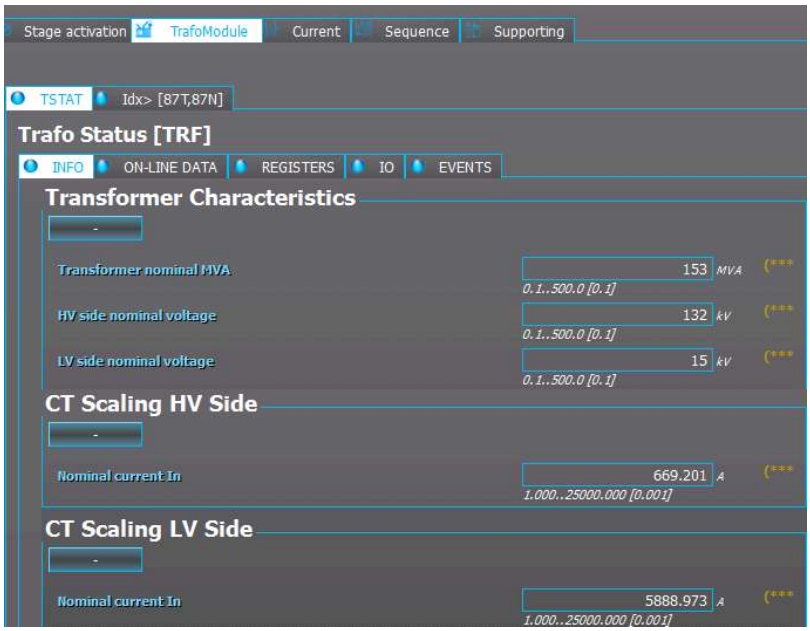

Example of CT scaling (application 1)

The following figure presents how CTs are connected to the device's measurement inputs. It also shows the CT ratings and the transformer nominal current. Note that S1 is always connected to an odd connector regardless of the CT direction. The CT direction is selected in the settings of the transformer differential protection function.

Figure. 4.2.2 - 17. Connections (application 1).

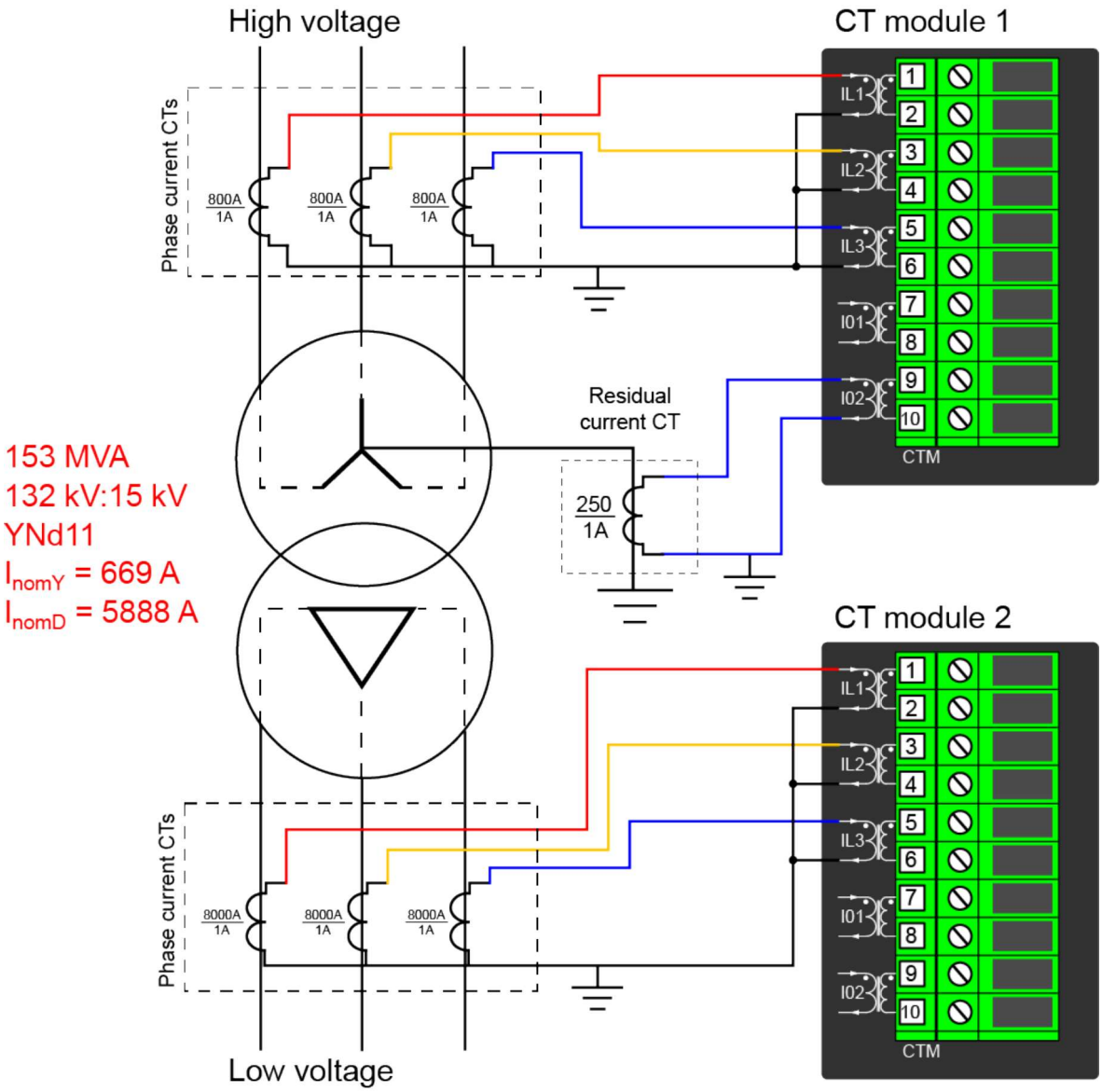

Because of the direction of the CTs and because the CTs' P1/S1 side is always wired to the modules's odd inputs, the "Differential calculation mode" setting has to be set to "Subtract" (*Protection → TrafoModule → Idx> [87T,87N] → Settings*). This way the direction of the measured currents are checked correctly from the device's perspective.

The following table presents the initial data of the connection as well as the ratings.

Table. 4.2.2 - 39. Initial data.

High-voltage side CT: • CT primary: 800 A • CT secondary: 1 A High-voltage side nominal current: 669 A	Ring core CT in Input I02: • 3I0CT primary: 250 A • 3I0CT secondary: 1 A	Low-voltage side CT: • CT primary: 8 000 A • CT secondary: 1 A Low-voltage side nominal current: 5 888 A
• Both CTs are pointing through the transformer (HV-S2 and LV-S2 are pointing in the same direction).		

© Arcteq Relays Ltd

The nominal current for both the HV and LV sides of the protected transformer are calculated based on the values set in the *Transformer characteristics* menu (*Protection* → *TrafoModule* → *TSTAT* → *INFO*). The ratio between the CT modules 1 and 2 can be set in their respective tabs at *Measurement* → *Transformers*. The per-unit scaling ("Scale meas. to In") is automatically set to "Object in p.u." in all machine protection devices and it cannot be changed.

Figure. 4.2.2 - 18. Phase CT scaling to machine nominal.

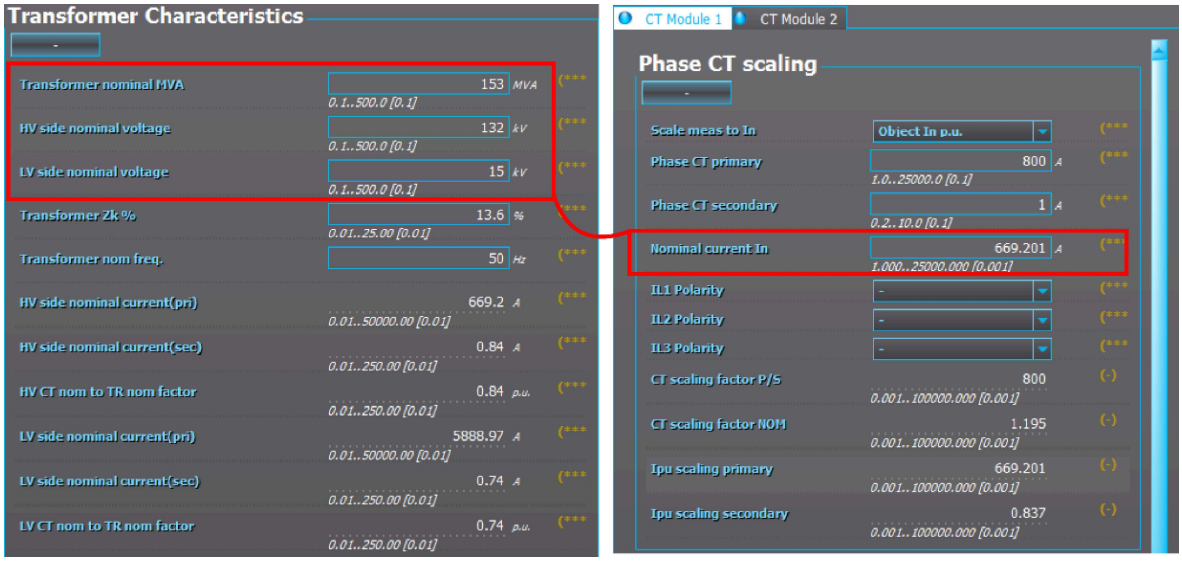

As seen in the image above, device calculates both the HV side nominal current (669.2 A) and the LV side nominal current (5,888.97 A). The nominal current calculations are done according to the following formulas:

$$\text{HV side nominal current (pri)} = \frac{trafo_{nom}/3}{U_{HV}/\sqrt{3}} = \frac{153\,000\,000/3}{132\,000/\sqrt{3}} \approx 669.201\ \text{A}$$

$$\text{LV side nominal current (pri)} = \frac{trafo_{nom}/3}{U_{LV}/\sqrt{3}} = \frac{153\,000\,000/3}{15\,000/\sqrt{3}} \approx 5888.97\ \text{A}$$

The HV and LV side nominal current can also be calculated in per unit values as follows:

$$\text{HV CT nom to TR nom factor} = \frac{HV\ side\ nominal\ current\ (pri)}{Phase\ CT\ primary} = \frac{669.2\ \text{A}}{800\ \text{A}} \approx 0.84\ \text{p.u.}$$

$$\text{LV CT nom to TR nom factor} = \frac{LV\ side\ nominal\ current\ (pri)}{Phase\ CT\ primary} = \frac{5888.97\ \text{A}}{8000\ \text{A}} \approx 0.74\ \text{p.u.}$$

The secondary nominal current (in amperes) is the result of multiplying the per unit value with the phase CT secondary side current. This current can be used when the unit is commissioned and when the directions of CTs are checked. See the example calculation below:

$$\text{HV side nominal current (sec)} = HV\ CT\ nom\ to\ TR\ nom\ factor \times Phase\ CT\ secondary = 0.84\ \text{p.u.} \times 1\ \text{A} = 0.84\ \text{A}$$

$$\text{LV side nominal current (sec)} = LV\ CT\ nom\ to\ TR\ nom\ factor \times Phase\ CT\ secondary = 0.74\ \text{p.u.} \times 1\ \text{A} = 0.74\ \text{A}$$

In case the phase current CTs are connected to the module via a Holmgren (summing) connection, the use of coarse residual current measurement settings is required: the "I01 CT" settings are set according to the phase current CTs' ratings (800/1 A).

Figure. 4.2.2 - 19. Residual I01 CT scaling (coarse).

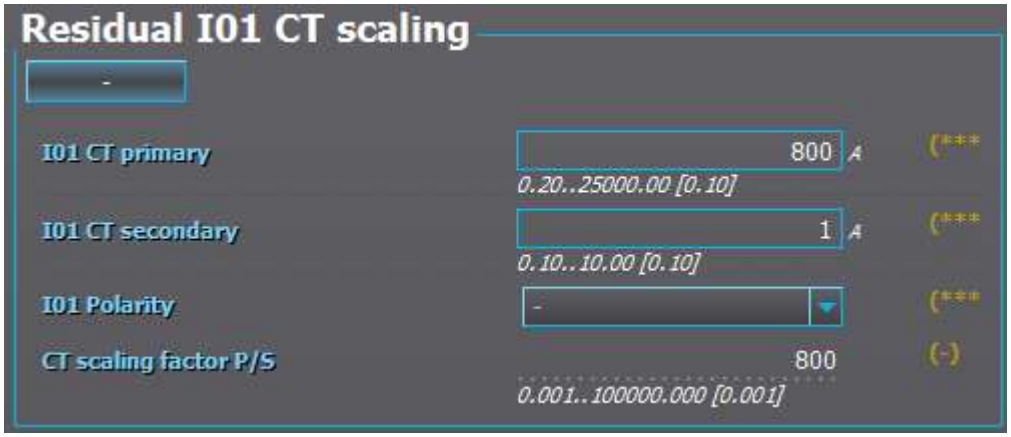

The residual current CT is connected to the first CTM directly, which requires the use of sensitive residual current measurement settings: the "Residual I02 CT scaling" settings are set according to the residual current CT's ratings (250/1 A).

Figure. 4.2.2 - 20. Residual I02 CT scaling (sensitive).

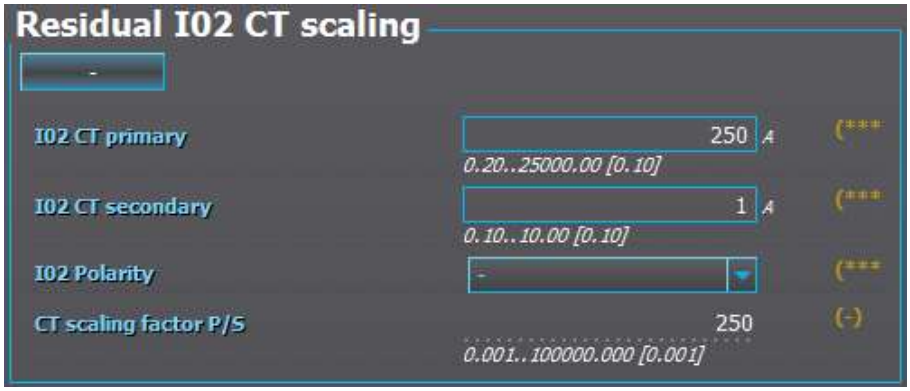

Example of CT scaling (application 2)

The following figure presents how the CTs are connected to the device's measurement inputs. It also shows the CT ratings and the transformer nominal current. Note that S1 is always connected to an odd connector regardless of the CT direction. The CT direction is selected in the settings of the transformer differential protection function.

© Arcteq Relays Ltd

Figure. 4.2.2 - 21. Connections (application 2).

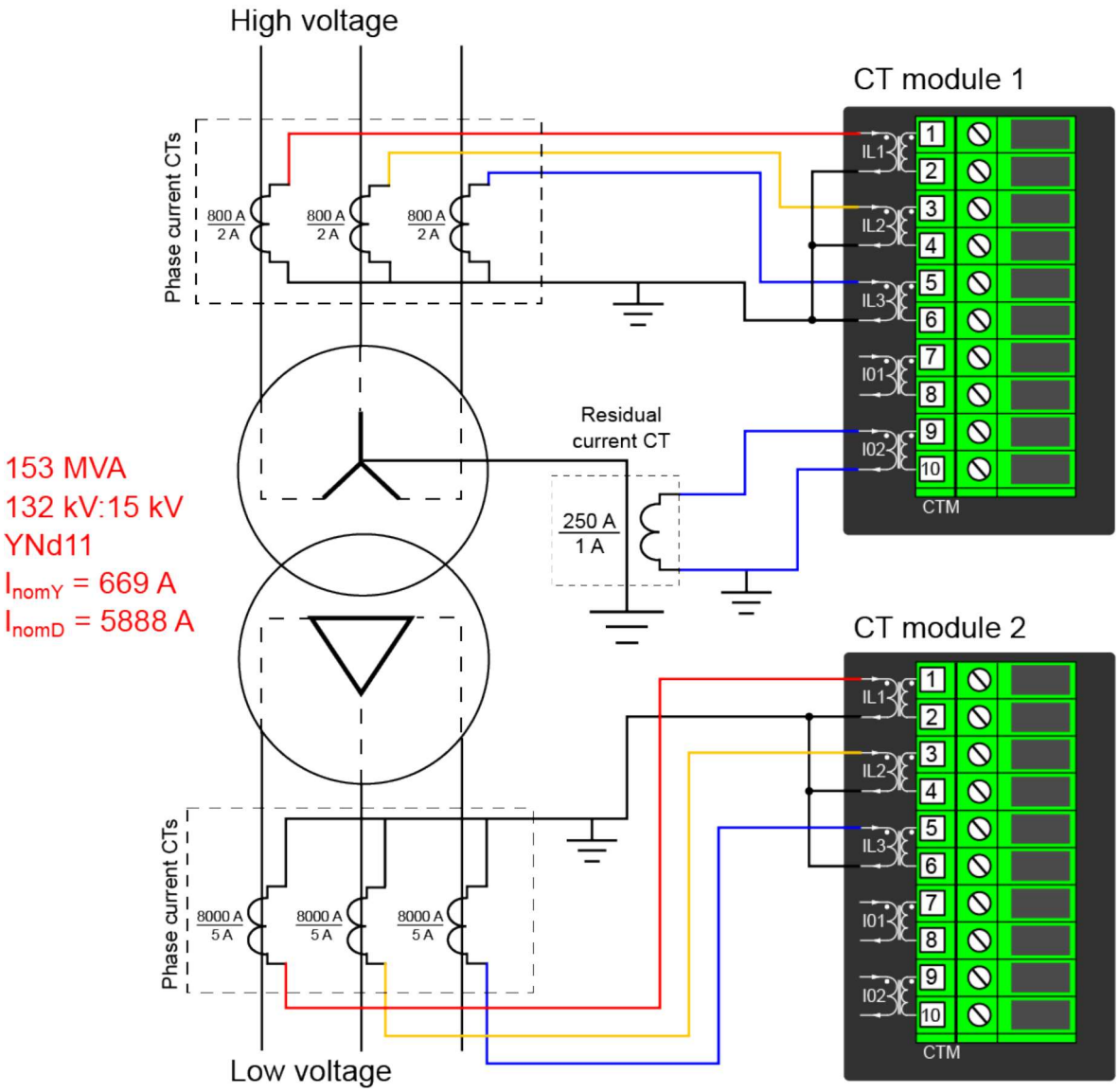

Because of the direction of the CTs and because the CTs' P1/S1 side is always wired to the modules's odd inputs, the "Differential calculation mode" has to be set to "Add" (*Protection → TrafoModule → Idx> [87T,87N] → Settings*). The difference with the first application is that here the CTs point towards the protected object instead of pointing through it.

The following table presents the initial data of the connection as well as the ratings.

Table. 4.2.2 - 40. Initial data.

Machine nominal power: 153 MVA Machine high voltage side nominal amplitude: 132 kV Machine low voltage side nominal amplitude: 15 kV		
High voltage side CT: • CT primary: 800 A • CT secondary: 2 A High-voltage side nominal current: 669 A	Residual current CT in Input I02: • 3I0CT primary: 250 A • 3I0CT secondary: 1 A	Low voltage side CT. • CT primary: 8 000 A • CT secondary: 5 A Low-voltage side nominal current: 5 888 A

- Both CTs are pointing towards the protected object (HV-S2 and LV-S2 are pointing at each other).

The nominal currents on both the HV and the LV sides are the same as in Application 1. However, the CTs' secondary current levels have been changed to 2 A (on the HV side) and to 5 A (on the LV side). The nominal currents are still calculated the same way:

$$\text{HV side nominal current (pri)} = \frac{trafo_{nom}/_{3}}{U_{HV}/_{\sqrt{3}}} = \frac{153\,000\,000/_{3}}{132\,000/_{\sqrt{3}}} \approx 669.201\ \text{A}$$

$$\text{LV side nominal current (pri)} = \frac{trafo_{nom}/_{3}}{U_{LV}/_{\sqrt{3}}} = \frac{153\,000\,000/_{3}}{15\,000/_{\sqrt{3}}} \approx 5888.97\ \text{A}$$

The HV and LV side nominal current can also be calculated in per unit values as follows:

$$\text{HV CT nom to TR nom factor} = \frac{HV\ side\ nominal\ current\ (pri)}{Phase\ CT\ primary} = \frac{669.2\ \text{A}}{800\ \text{A}} \approx 0.84\ \text{p.u.}$$

$$\text{LV CT nom to TR nom factor} = \frac{LV\ side\ nominal\ current\ (pri)}{Phase\ CT\ primary} = \frac{5888.97\ \text{A}}{8000\ \text{A}} \approx 0.74\ \text{p.u.}$$

The secondary nominal current (in amperes) is the result of multiplying the per unit value with the phase CT secondary side current. This current can be used when the unit is commissioned and when the directions of CTs are checked. In Application 2 it is necessary to inject higher amplitudes to the CTs via the secondary injection tool in order to reach the nominal currents. See the example calculation below:

$$\text{HV side nominal current (sec)}$$
$$= HV\ CT\ nom\ to\ TR\ nom\ factor \times Phase\ CT\ secondary = 0.84\ \text{p.u.} \times 2\ \text{A} = 1.68\ \text{A}$$

$$\text{LV side nominal current (sec)}$$
$$= LV\ CT\ nom\ to\ TR\ nom\ factor \times Phase\ CT\ secondary = 0.74\ \text{p.u.} \times 5\ \text{A} = 3.70\ \text{A}$$

Settings

Table. 4.2.2 - 41. Settings of the Phase CT scaling.

Name	Unit	Range	Step	Default	Description
Scale measurement to In	-	• CT nom p.u. • Object In p.u.	-	• CT nom p.u.	The selection of the reference used in the device's per-unit system scaling. Either the set phase current CT primary or the protected object's nominal current. **CAUTION!** Not applicable in machine protection!
Phase CT primary	A	1…25 000	0.001	100	The rated primary current of the current transformer.

© Arcteq Relays Ltd

Name	Unit	Range	Step	Default	Description
Phase CT secondary	A	0.2…10	0.001	5	The rated secondary current of the current transformer.
Nominal current In	A	1…25 000	0.001	100	The nominal current of the protected object. This setting is only visible if the option "Object In p.u." has been selected in the "Scale meas. to In" setting.
IL1 Polarity	-	• - • Invert	-	• -	The selection of the first current measurement channel's (IL1) polarity (direction). The default setting is for the positive current to flow from connector 1 to connector 2, with the secondary currents' starpoint pointing towards the line.
IL2 Polarity	-	• - • Invert	-	• -	The selection of the second current measurement channel's (IL2) polarity (direction). The default setting is for the positive current to flow from connector 3 to connector 4, with the secondary currents' starpoint pointing towards the line.
IL3 Polarity	-	• - • Invert	-	• -	The selection of the third current measurement channel's (IL3) polarity (direction). The default setting is for the positive current to flow from connector 5 to connector 6, with the secondary currents' starpoint pointing towards the line.
CT scaling factor P/S	-	-	-	-	A feedback value; the calculated scaling factor that is the ratio between the primary current and the secondary current.
CT scaling factor NOM	-	-	-	-	A feedback value; the calculated scaling factor that is the ratio between the set primary current and the set nominal current.
Ipu scaling primary	-	-	-	-	A feedback value; the scaling factor for the primary current's per-unit value.
Ipu scaling secondary	-	-	-	-	A feedback value; the scaling factor for the secondary current's per-unit value.

Table. 4.2.2 - 42. Settings of the Residual I01 CT scaling.

Name	Unit	Range	Step	Default	Description
I01 CT primary	A	0.2…25 000	0.000 01	100	The rated primary current of the current transformer.
I01 CT secondary	A	0.1…10	0.000 01	1.0	The rated secondary current of the current transformer.

Name	Unit	Range	Step	Default	Description
I01 Polarity	-	• - • Invert	-	-	The selection of the coarse residual measurement channel's (I01) polarity (direction). The default setting is for the positive current to flow from connector 7 to connector 8.
CT scaling factor P/S	-	-	-	-	A feedback value; the calculated scaling factor that is the ratio between the primary current and the secondary current.

Table. 4.2.2 - 43. Settings of the Residual I02 CT scaling.

Name	Unit	Range	Step	Default	Description
I02 CT primary	A	1…25 000	0.000 01	100	The rated primary current of the current transformer.
I02 CT secondary	A	0.001…10	0.000 01	0.2	The rated secondary current of the current transformer.
I02 Polarity	-	• - • Invert	-	-	The selection of the sensitive residual measurement channel's (I02) polarity (direction). The default setting is for the positive current to flow from connector 9 to connector 10.
CT scaling factor P/S	-	-	-	-	A feedback value; the calculated scaling factor that is the ratio between the primary current and the secondary current.

Measurements

The following measurements are available in the measured current channels.

Table. 4.2.2 - 44. Per-unit phase current measurements.

Name	Unit	Range	Step	Description
Pha.curr.ILx	× In	0.000…1 250.000	0.001	The RMS current measurement (in p.u.) from each of the phase current channels.
Pha.curr.ILx TRMS	× In	0.000…1 250.000	0.001	The TRMS current (inc. harmonics up to 31st) measurement (in p.u.) from each of the phase current channels.
P-P curr.ILx	× In	0.000…500.000	0.001	The peak-to-peak current measurement (in p.u.) from each of the phase current channels.

Table. 4.2.2 - 45. Primary phase current measurements.

Name	Unit	Range	Step	Description
Pri.Pha.curr.ILx	A	0.000…1 000 000.000	0.001	The primary RMS current measurement from each of the phase current channels.
Pha.curr.ILx TRMS Pri	A	0.000…1 000 000.000	0.001	The primary TRMS current (inc. harmonics up to 31st) measurement from each of the phase current channels.

© Arcteq Relays Ltd
IM00099

Table. 4.2.2 - 46. Secondary phase current measurements.

Name	Unit	Range	Step	Description
Sec.Pha.curr.ILx	A	0.000…300.000	0.001	The primary RMS current measurement from each of the phase current channels.
Pha.curr.ILx TRMS Sec	A	0.000…300.000	0.001	The primary TRMS current (inc. harmonics up to 31st) measurement from each of the phase current channels.

Table. 4.2.2 - 47. Phase current angle measurements.

Name	Unit	Range	Step	Description
Pha.angle ILx	deg	0.000…360.000	0.001	The phase angle measurement from each of the three phase current inputs.

Table. 4.2.2 - 48. Per-unit residual current measurements.

Name	Unit	Range	Step	Description
Res.curr.I0x	× In	0.000…1 250.000	0.001	The RMS current measurement (in p.u.) from the residual current channel I01 or I02.
Calculated I0	× In	0.000…1 250.000	0.001	The RMS current measurement (in p.u.) from the calculated I0 current channel.
Res.curr.I0x TRMS	× In	0.000…1 250.000	0.001	The TRMS current (inc. harmonics up to 31st) measurement (in p.u.) from the residual current channel I01 or I02.
P-P curr.I0x	× In	0.000…500.000	0.001	The peak-to-peak current measurement (in p.u.) from the residual current channel I01 or I02.

Table. 4.2.2 - 49. Primary residual current measurements.

Name	Unit	Range	Step	Description
Pri.Res.curr.I0x	A	0.000…1 000 000.000	0.001	The primary RMS current measurement from the residual current channel I01 or I02.
Pri.calc.I0	A	0.000…1 000 000.000	0.001	The primary RMS current measurement from the calculated current channel I0.
Res.curr.I01 TRMS Pri	A	0.000…1 000 000.000	0.001	The TRMS current (inc. harmonics up to 31st) measurement from the primary residual current channel I01 or I02.

Table. 4.2.2 - 50. Secondary residual current measurements.

Name	Unit	Range	Step	Description
Sec.Res.curr.I0x	A	0.000…300.000	0.001	The secondary RMS current measurement from the residual current channel I01 or I02.

Name	Unit	Range	Step	Description
Sec.calc.I0	A	0.000…300.000	0.001	The secondary RMS current measurement from the calculated current channel I0.
Res.curr.I0x TRMS Sec	A	0.000…300.000	0.001	The secondary TRMS current (inc. harmonics up to 31st) measurement from the secondary residual current channel I01 or I02.

Table. 4.2.2 - 51. Residual current phase angle measurements.

Name	Unit	Range	Step	Description
Res.curr.angle I0x	deg	0.000…360.000	0.001	The residual current angle measurement from the I01 or I02 current input.
Calculated I0 angle	deg	0.000…360.000	0.001	The calculated residual current angle measurement.

Table. 4.2.2 - 52. Per-unit sequence current measurements.

Name	Unit	Range	Step	Description
Positive sequence curr.	× In	0.00…1 250.0	0.001	The measurement (in p.u.) from the calculated positive sequence current.
Negative sequence curr.	× In	0.00…1 250.0	0.001	The measurement (in p.u.) from the calculated negative sequence current.
Zero sequence curr.	× In	0.00…1 250.0	0.001	The measurement (in p.u.) from the calculated zero sequence current.

Table. 4.2.2 - 53. Primary sequence current measurements.

Name	Unit	Range	Step	Description
Pri.Positive sequence curr.	A	0.00…1 000 000.0	0.001	The primary measurement from the calculated positive sequence current.
Pri.Negative sequence curr.	A	0.00…1 000 000.0	0.001	The primary measurement from the calculated negative sequence current.
Pri.Zero sequence curr.	A	0.00…1 000 000.0	0.001	The primary measurement from the calculated zero sequence current.

Table. 4.2.2 - 54. Secondary sequence current measurements.

Name	Unit	Range	Step	Description
Sec.Positive sequence curr.	A	0.000…300.000	0.001	The secondary measurement from the calculated positive sequence current.
Sec.Negative sequence curr.	A	0.000…300.000	0.001	The secondary measurement from the calculated negative sequence current.

© Arcteq Relays Ltd

Name	Unit	Range	Step	Description
Sec.Zero sequence curr.	A	0.000…300.000	0.001	The secondary measurement from the calculated zero sequence current.

Table. 4.2.2 - 55. Sequence phase angle measurements.

Name	Unit	Range	Step	Description
Positive sequence curr.angle	deg	0.000…360.0	0.001	The calculated positive sequence current angle.
Negative sequence curr.angle	deg	0.000…360.0	0.001	The calculated negative sequence current angle.
Zero sequence curr.angle	deg	0.000…360.0	0.001	The calculated zero sequence current angle.

Table. 4.2.2 - 56. Harmonic current measurements.

Name	Unit	Range	Step	Default	Description
Harm Abs.pr Perc.	-	• Percent • Absolute	-	Percent	Defines whether the harmonics are calculated as percentage or absolute values.
Harmonics display	-	• Per unit • Primary A • Secondary A	-	Per unit	Defines how the harmonics are displayed: in p.u. values, as primary current values, or as secondary current values.
IxxMaximum harmonic	A	0.000…1 000 000.000	0.001	-	Displays the maximum harmonics value of the selected current input ILx or I0x.
Ixx fundamental	A	0.000…1 000 000.000	0.001	-	Displays the current value of the fundamental frequency measurement (RMS) from the selected current input ILx or I0x.
Ixx harmonics (2nd…31st harmonic)	A	0.000…1 000 000.000	0.001	-	Displays the selected harmonic from the current input ILx or I0x.

4.2.3 Voltage measurement and scaling

The voltage measurement module (VT module, or VTM) is used for measuring the voltages from voltage transformers. The voltage measurements are updated every 5 milliseconds. The measured values are processed into the measurement database and they are used by measurement and protection functions. It is essential to understand the concept of voltage measurements to be able to get correct measurements.

Figure. 4.2.3 - 22. Voltage measurement terminology

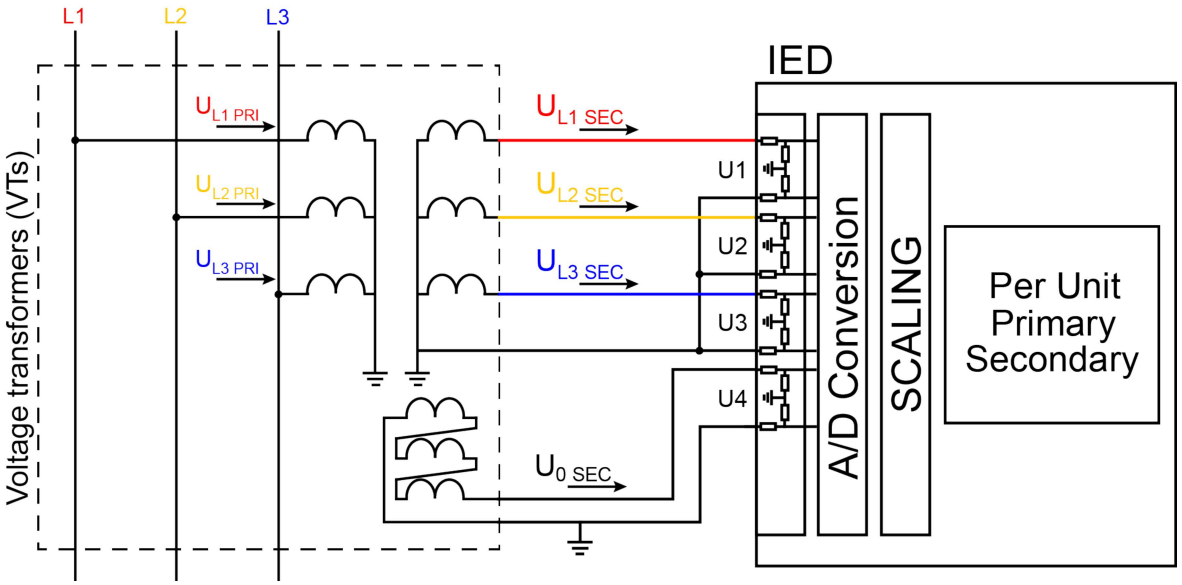

PRI: The primary voltage, i.e. the voltage in the primary circuit which is connected to the primary side of the voltage transformer.

SEC: The secondary voltage, i.e. the voltage which the voltage transformer transforms according to the ratio. This voltage is measured by the device.

For the measurements to be correct the user needs to ensure that the measurement signals are connected to the correct inputs, that the voltage direction correct, and that the scaling is set correctly.

The device calculates the scaling factors based on the set VT primary, and secondary voltage values. The device measures secondary voltages, which are the voltage outputs from the VT installed into the application's primary circuit. The voltage can be measured directly from the system as well (up to 400 V nominal line to neutral voltage). When connecting voltage directly, measuring mode must be set to 3LN+U4 mode. The rated primary and secondary voltages of the VT need to be set for the device to "know" the primary and per-unit values. In modern protection devices this scaling calculation is done internally after the voltage transformer's primary and secondary voltages are set.

Normally, the primary line-to-line voltage rating for VTs is 400 V...60 kV, while the secondary voltage ratings are 100 V...210 V. Non-standard ratings can also be directly connected as the scaling settings are flexible and have large ranges.

Example of VT scaling

The following figure presents how VTs are connected to the device's measurement inputs. It also shows the VT ratings. In the figure below, three line-to-neutral voltages are connected along with the zero sequence voltage; therefore, the 3LN+U4 mode must be selected and the U4 channel must be set as U0. Other possible connections are presented later in this chapter.

© Arcteq Relays Ltd

Figure. 4.2.3 - 23. Connections.

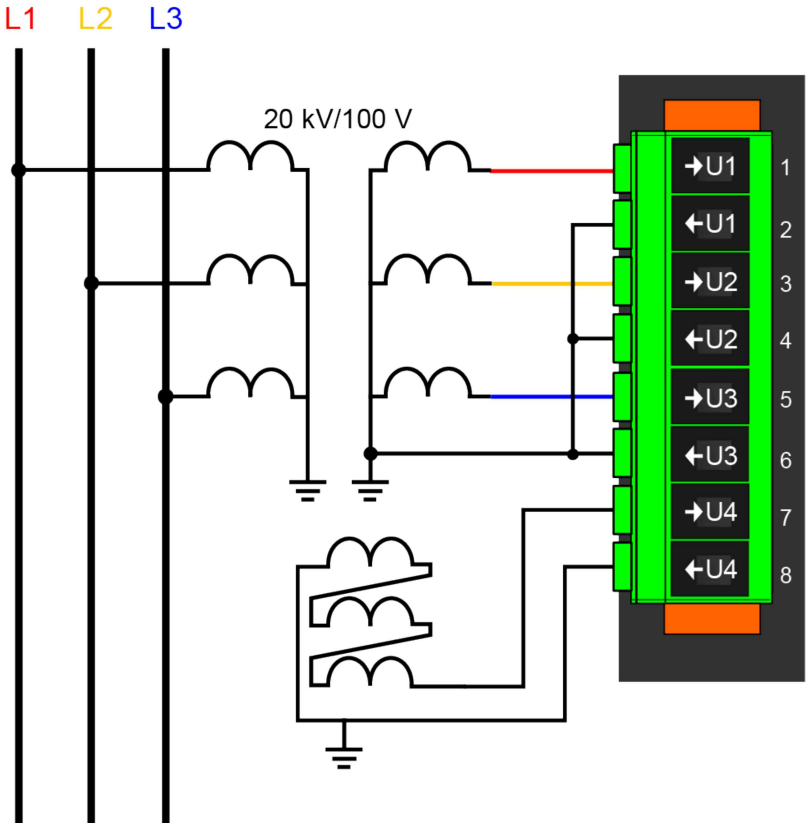

The following table presents the initial data of the connection.

Table. 4.2.3 - 57. Initial data.

Phase voltage VT - VT primary: 20 000 V - VT secondary: 100 V	Zero sequence voltage VT - U4 VT primary: 20 000 V - U4 VT secondary: 100 V
- the zero sequence voltage is connected similarly to line-to-neutral voltages (+U0). - in case wiring is incorrect, all polarities can be individually switched by 180 degrees in the device.	

Once the settings have been sent to the device, device calculates the scaling factors and displays them for the user. The "VT scaling factor P/S" describes the ratio between the primary voltage and the secondary voltage. The per-unit scaling factors ("VT scaling factor p.u.") for both primary and secondary values are also displayed.

There are several different ways to use all four voltage channels. The voltage measurement modes are the following:

- 3LN+U4 (three line-to-neutral voltages and U4 can be used for either zero sequence voltage or synchrochecking)
- 3LL+U4 (three line-to-line voltages and U4 can be used either for zero sequence voltage or synchrochecking)
- 2LL+U3+U4 (two line-to-line voltages and the U3 and the U4 channels can be used for synchrochecking, zero sequence voltage, or for both)

The 3LN+U0 is the most common voltage measurement mode. See below for example connections of voltage line-to-line measurement (3LL on the left, 2LL on the right).

Figure. 4.2.3 - 24. Example connections for voltage line-to-line measurement.

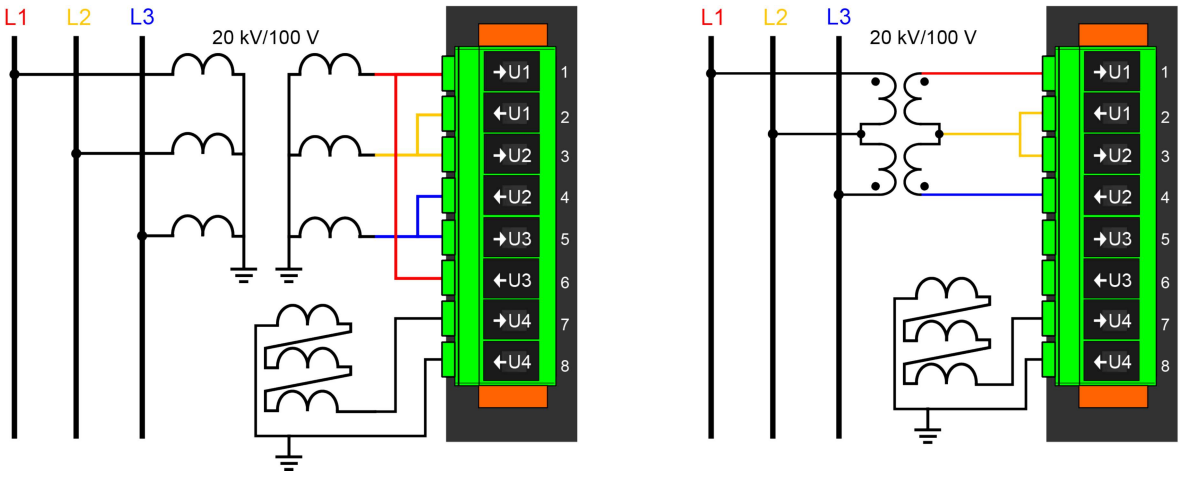

If only two line-to-line voltages are measured, the third one (U_{L31}) is calculated based on the U_{L12} and U_{L23} vectors. When measuring line-to-line voltages, the line-to-neutral voltages can also be calculated as long as the value of U0 is measured.

The voltage measurement channel U4 can be used to measure the zero sequence voltage (U0), the side 2 voltage of the circuit breaker (Synchrocheck), or for automatic voltage regulator function. If the 2LL+U3+U4 mode is selected, the third channel (U3) can be used for this purpose. Please note that U0 can only be measured by using a single channel.

In the image below is an example of 2LL+U0+SS, that is, two line-to-line measurements with the zero sequence voltage and voltage from side 2 for Synchrocheck. Since U0 is available, line-to-neutral voltages can be calculated.

© Arcteq Relays Ltd

Figure. 4.2.3 - 25. 2LL+U0+SS settings and connections.

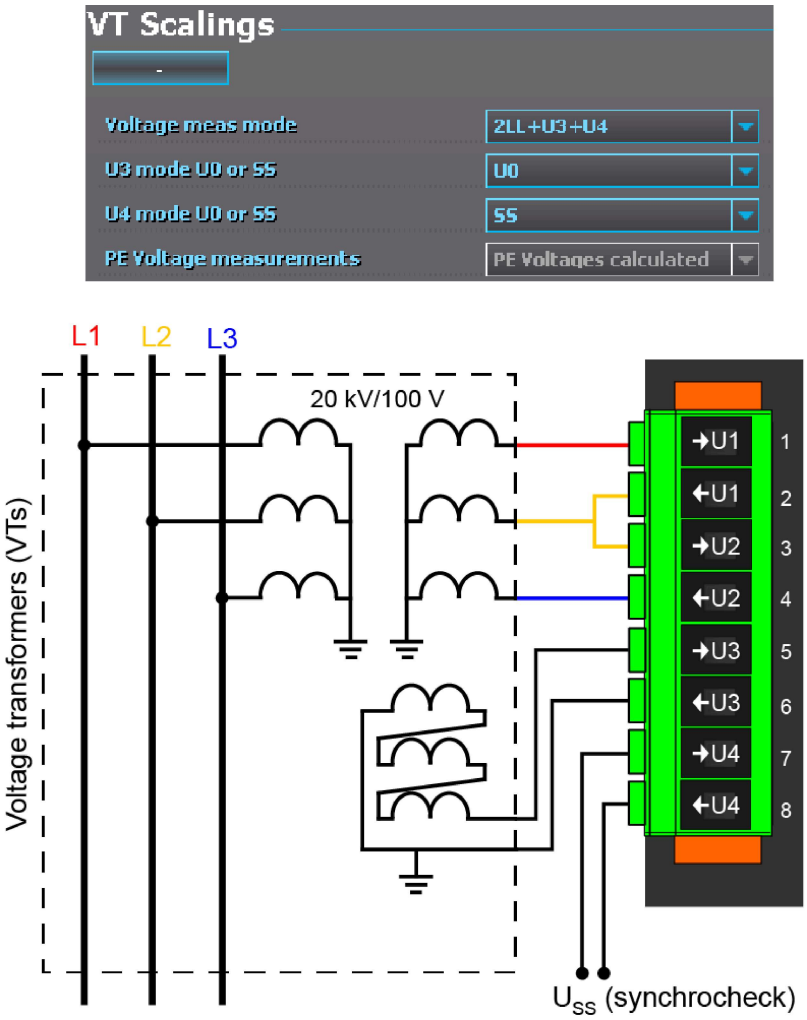

The image collection below presents the device's behavior when nominal voltage is injected into the device via secondary test equipment. The measurement mode is 3LN+U4 which means that the device is measuring line-to-neutral voltages. The VT scaling has been set to 20 000 : 100 V. The U4 channel measures the zero sequence voltage which has the same ratio (20 000 : 100 V).

Figure. 4.2.3 - 26. Measurement behavior when nominal voltage injected.

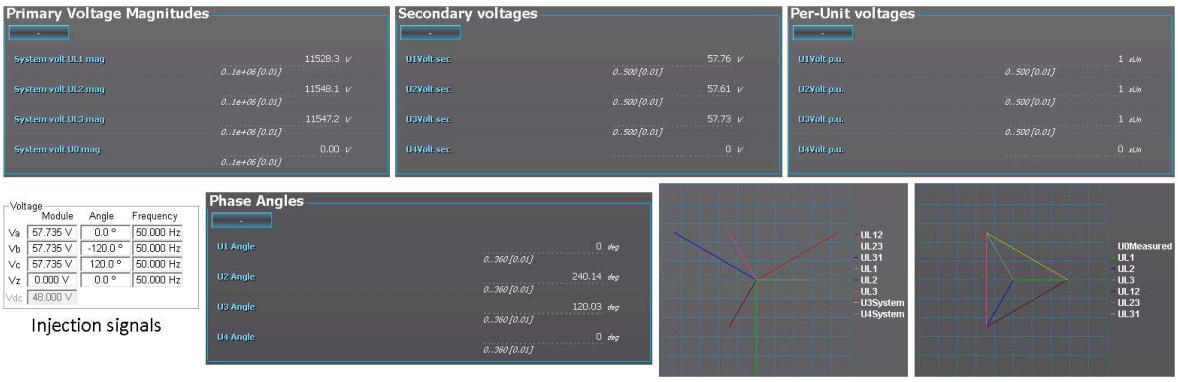

The image collection below presents the device's behavior when voltage is injected into the device via secondary test equipment during an earth fault. The measurement mode is 3LN+U4 which means that the device is measuring line-to-neutral voltages. The VT scaling has been set to 20 000 : 100 V. The U4 channel measures the zero sequence voltage which has the same ratio (20 000 : 100 V).

Figure. 4.2.3 - 27. Device behavior when voltage injected during an earth fault.

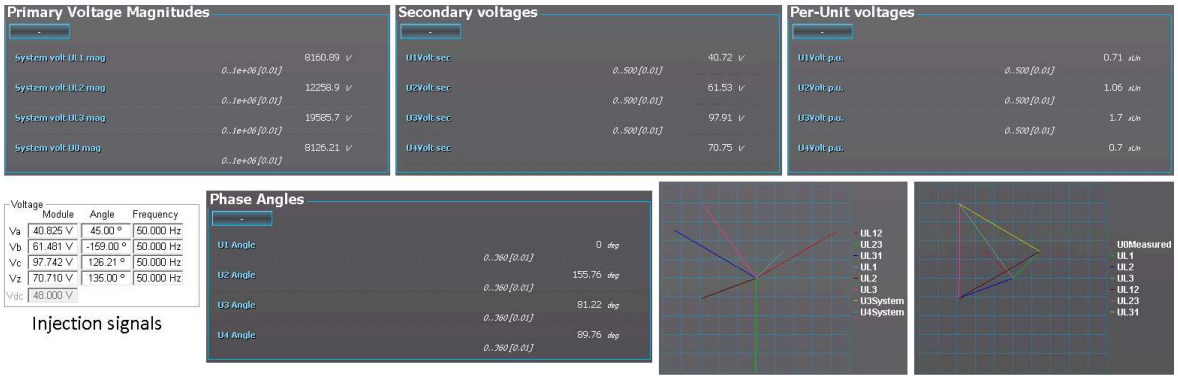

Troubleshooting

When the measured voltage values differ from the expected voltage values, the following table offers possible solutions for the problems.

Problem	Check / Resolution
The measured voltage amplitude in all phases does not match the injected voltage.	The scaling settings or the voltage measurement mode may be wrong, check that the settings match with the connected voltage transformer (*Measurement → Transformers → VT Module*).
The measured voltage amplitude does not match one of the measured phases./ The calculated U0 is measured even though it should not.	Check the wiring connections between the injection device or the VTs and the device.
The measured voltage amplitudes are OK but the angles are strange./ The voltage unbalance protection trips immediately after activation./ The earth fault protection trips immediately after it is activated and voltage calculated.	The voltages are connected to the measurement module but the order or polarity of one or all phases is incorrect. In device settings, go to *Measurement → Phasors* and check the "System voltage vectors" diagram. When all connections are correct, the diagram (symmetric feeding) should look like this: 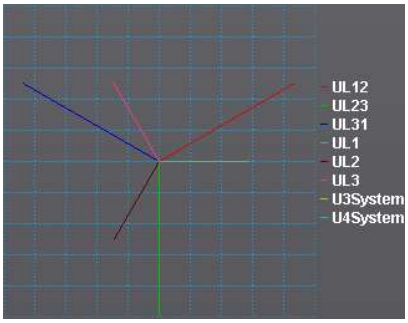

© Arcteq Relays Ltd

Alternative

Settings

Table. 4.2.3 - 58. Settings of the VT scaling.

Name	Range	Step	Default	Description
Voltage measurement mode	• 3LN+U4 • 3LL+U4 • 2LL+U3+U4	-	3LN+U4	The device's voltage wiring method. The voltages are scaled according the set voltage measurement mode.
U3 mode U0 or SS	• Not Used • U0 • SS	-	Not Used	The voltage channel U3 can be used to measure zero sequence voltage (U0) or the Synchrocheck voltage (SS). If neither is needed, the (default) option "Not Used" should be active. This setting is only valid if the "2LL+U3+U4" mode is selected.
U4 mode U0 or SS				The voltage channel U4 can be used to measure zero sequence voltage (U0) or the Synchrocheck voltage (SS). If neither is needed, the (default) option "Not Used" should be active.
U0 (U3) Measured from	• Broken Delta • Neutral point • Open delta	-	Broken delta	Defines how the secondary voltage is scaled to the primary. "Broken Delta" is the most common mode. Does not affect how protection operates, it only affects the displayed primary voltages. This parameter is visible when the "U4 mode U0 or SS" has been set to the "U0" mode. Example with scaling 20000/100 for Uo and injection 10V secondary: • Broken delta: 1155V (10%) • Neutral point: 2000 V (17.34%) • Open delta: 667V (5.78%)
U0 (U4) Measured from				Defines how the secondary voltage is scaled to the primary. "Broken Delta" is the most common mode. Does not affect how protection operates, it only affects the displayed primary voltages. This parameter is visible when the "U4 mode U0 or SS" has been set to the "U0" mode. Example with scaling 20000/100 for Uo and injection 10V secondary: • Broken delta: 1155V (10%) • Neutral point: 2000 V (17.34%) • Open delta: 667V (5.78%)
Set input voltage thresholds	• No • Yes	-	Yes	If this parameter is enabled, it is possible to set minimum voltage required for voltage measurement to start.
U1 input threshold	0.10...50.00 V_{sec}	0.01 V_{sec}	1.00 V_{sec}	Sets the lowest voltage the channel is allowed to measure.
U2 input threshold				
U3 input threshold				
U4 input threshold				

Name	Range	Step	Default	Description
Voltage memory	• Disabled • Activated	-	Disabled	Activates the voltage memory. The "Voltage memory" chapter describes the function in more detail.
P-E Voltage measurements	• No P-E voltages available • P-E Voltages calculated • P-E Voltages measured	-	-	Indicates whether or not phase-to-earth voltages are available. Also indicates whether P-E voltages are measured from the voltage channels directly or if they are calculated from measured line-to-line and zero sequence voltages.
VT primary	1.0…1 000 000.0V	0.1V	20 000.0V	The rated primary voltage of the voltage transformer.
VT secondary	0.2…400.0V	0.1V	100.0V	The rated secondary voltage of the voltage transformer.
U3 Res/SS VT primary	1.0…1 000 000V	0.1V	20 000.0V	The primary nominal voltage of the connected U0 or SS VT. This setting is only valid if the "2LL+U3+U4" mode is selected.
U3 Res/SS VT secondary	0.2…400.0V	0.1V	100.0V	The secondary nominal voltage of the connected U0 or SS VT. This setting is only valid if the "2LL+U3+U4" mode is selected.
U4 Res/SS VT primary	1.0…1 000 000.0V	0.1V	20 000.0V	The primary nominal voltage of the connected U0 or SS VT.
U4 Res/SS VT secondary	0.2…400.0V	0.1V	100.0V	The secondary nominal voltage of the connected U0 or SS VT.
U1 Polarity	• - • Invert	-	-	The selection of the first voltage measurement channel's (U1) polarity (direction). The default setting is for the positive voltage to flow from connector 1 to connector 2, with the secondary voltage's starpoint pointing towards the line.
U2 Polarity				The selection of the second voltage measurement channel's (U2) polarity (direction). The default setting is for the positive voltage to flow from connector 3 to connector 4, with the secondary voltage's starpoint pointing towards the line.
U3 Polarity				The selection of the third voltage measurement channel's (U3) polarity (direction). The default setting is for the positive voltage to flow from connector 5 to connector 6, with the secondary voltage's starpoint pointing towards the line.
U4 Polarity				The selection of the fourth voltage measurement channel's (U4) polarity (direction). The default setting is for the positive voltage to flow from connector 7 to connector 8, with the secondary voltage's starpoint pointing towards the line.

© Arcteq Relays Ltd

Table. 4.2.3 - 59. Read-only parameters of the VT scaling.

Name	Description
VT scaling factor P/S	The calculated scaling factor that is the ratio between the primary voltage and the secondary voltage.
VT scaling factor p.u. Pri	The scaling factor for the primary voltage's per-unit value.
VT scaling factor p.u. Sec	The scaling factor for the secondary voltage's per-unit value.
U3 VT scaling factor P/S U0/SS	The scaling factor that is the ratio between the U3 channel's primary and secondary voltages. This setting is only valid if the "2LL+U3+U4" mode is selected.
U3 scaling factor p.u. Pri	Scaling factor for the primary voltage's per-unit value. This setting is only valid if the "2LL+U3+U4" mode is selected.
U3 scaling factor p.u. Sec	Scaling factor for the secondary voltage's per-unit value. This setting is only valid if the "2LL+U3+U4" mode is selected.
U4 VT scaling factor P/S U0/SS	Scaling factor that is the ration between the U4 channel's primary and secondary voltages. This setting is only valid is the "2LL+U3+U4" mode is selected.
U4 scaling factor p.u. Pri	Scaling factor for the primary voltage's per-unit value. This setting is only valid if the "2LL+U3+U4" mode is selected.
U4 scaling factor p.u. Sec	Scaling factor for the secondary voltage's per-unit value. This setting is only valid if the "2LL+U3+U4" mode is selected.

Measurements

The following measurements are available in the measured voltage channels.

Table. 4.2.3 - 60. Per-unit voltage measurements.

Name	Range	Step	Description
UxVolt p.u.	0.00…500.00xU_N	0.01xU_N	The voltage measurement fundamental frequency component (in p.u.) from each of the voltage channels.
UxVolt TRMS p.u.	0.00…500.00xU_N	0.01xU_N	The TRMS voltage (inc. harmonics up to 31st) measurement (in p.u.) from each of the voltage channels.

Table. 4.2.3 - 61. Secondary voltage measurements.

Name	Range	Step	Description
Ux Volt sec	0.00…500.00V	0.01V	The secondary voltage measurement fundamental frequency component from each of the voltage channels.
UxVolt TRMS sec	0.00…500.00V	0.01V	The secondary TRMS voltage (inc. harmonics up to 31st) measurement from each of the voltage channels.

Table. 4.2.3 - 62. Voltage phase angle measurements.

Name	Range	Step	Description
Ux Angle	0.00…360.00°	0.01°	The phase angle measurement from each of the four voltage inputs.

Table. 4.2.3 - 63. Per-unit sequence voltage measurements.

Name	Range	Step	Description
Pos.seq.Volt.p.u.	0.00…500.00×U_N	0.01xU_N	The measurement (in p.u.) from the calculated positive sequence voltage.
Neg.seq.Volt.p.u.	0.00…500.00xU_N	0.01xU_N	The measurement (in p.u.) from the calculated negative sequence voltage.
Zero.seq.Volt.p.u.	0.00…500.00xU_N	0.01xU_N	The measurement (in p.u.) from the calculated zero sequence voltage.

Table. 4.2.3 - 64. Primary sequence voltage measurements.

Name	Range	Step	Description
Pos.seq.Volt.pri	0.00…1 000 000.00V	0.01V	The primary measurement from the calculated positive sequence voltage.
Neg.seq.Volt.pri	0.00…1 000 000.00V	0.01V	The primary measurement from the calculated negative sequence voltage.
Zero.seq.Volt.pri	0.00…1 000 000.00V	0.01V	The primary measurement from the calculated zero sequence voltage.

Table. 4.2.3 - 65. Secondary sequence voltage measurements.

Name	Range	Step	Description
Pos.seq.Volt.sec	0.00…4 800.00V	0.01V	The secondary measurement from the calculated positive sequence voltage.
Neg.seq.Volt.sec	0.00…4 800.00V	0.01V	The secondary measurement from the calculated negative sequence voltage.
Zero.seq.Volt.sec	0.00…4 800.00V	0.01V	The secondary measurement from the calculated zero sequence voltage.

Table. 4.2.3 - 66. Sequence voltage angle measurements.

Name	Range	Step	Description
Pos.seq.Volt.Angle	0.00…360.00°	0.01°	The calculated positive sequence voltage angle.
Neg.seq.Volt.Angle	0.00…360.00°	0.01°	The calculated negative sequence voltage angle.
Zero.seq.Volt.Angle	0.00…360.00°	0.01°	The calculated zero sequence voltage angle.

© Arcteq Relays Ltd

Table. 4.2.3 - 67. System primary voltage measurements.

Name	Range	Step	Description
System volt UL12 mag	0.00…1 000 000.00V	0.01V	The primary line-to-line UL12 voltage fundamental frequency component (measured or calculated). You can also select the row where the unit for this is kV.
System volt UL23 mag	0.00…1 000 000.00V	0.01V	The primary line-to-line UL23 voltage fundamental frequency component (measured or calculated). You can also select the row where the unit for this is kV.
System volt UL31 mag	0.00…1 000 000.00V	0.01V	The primary line-to-line UL31 voltage fundamental frequency component (measured or calculated). You can also select the row where the unit for this is kV.
System volt UL1 mag	0.00…1 000 000.00V	0.01V	The primary line-to-neutral UL1 voltage fundamental frequency component (measured or calculated). You can also select the row where the unit for this is kV.
System volt UL2 mag	0.00…1 000 000.00V	0.01V	The primary line-to-neutral UL2 voltage fundamental frequency component (measured or calculated). You can also select the row where the unit for this is kV.
System volt UL3 mag	0.00…1 000 000.00V	0.01V	The primary line-to-neutral UL3 voltage fundamental frequency component (measured or calculated). You can also select the row where the unit for this is kV.
System volt U0 mag	0.00…1 000 000.00V	0.01V	The primary zero sequence U0 voltage fundamental frequency component (measured or calculated). You can also select the row where the unit for this is kV. There is also a row where the unit is %.
System volt U3 mag	0.00…1 000 000.00V	0.01V	The primary measured Synchrocheck voltage fundamental frequency component (SS). This magnitude is displayed only when the "2LL+U3+U4" mode is selected and both U3 and U4 are in use. You can also select the row where the unit for this is kV.
System volt U4 mag	0.00…1 000 000.00V	0.01V	The primary measured Synchrocheck voltage fundamental frequency component (SS). This magnitude is displayed only when the "2LL+U3+U4" mode is selected and both U3 and U4 are in use. You can also select the row where the unit for this is kV.

Table. 4.2.3 - 68. Primary system voltage angles.

Name	Range	Step	Description
System volt UL12 ang	0.00…360.00°	0.01°	The primary line-to-line angle UL12 (measured or calculated).
System volt UL23 ang	0.00…360.00°	0.01°	The primary line-to-line angle UL23 (measured or calculated).

Name	Range	Step	Description
System volt UL31 ang	0.00…360.00°	0.01°	The primary line-to-line angle UL23 (measured or calculated).
System volt UL1 ang	0.00…360.00°	0.01°	The primary line-to-neutral angle UL1 (measured or calculated).
System volt UL2 ang	0.00…360.00°	0.01°	The primary line-to-neutral angle UL2 (measured or calculated).
System volt UL3 ang	0.00…360.00°	0.01°	The primary line-to-neutral angle UL3 (measured or calculated).
System volt U0 ang	0.00…360.00°	0.01°	The primary zero sequence angle U0 (measured or calculated).
System volt U3 ang	0.00…360.00°	0.01°	The primary measured Synchrocheck angle SS. This magnitude is only valid when the "2LL+U3+U4" mode is selected and both U3 and U4 are in use.
System volt U4 ang	0.00…360.00°	0.01°	The primary measured Synchrocheck angle SS. This magnitude is displayed only when the "2LL+U3+U4" mode is selected and both U3 and U4 are in use.

Table. 4.2.3 - 69. Harmonic voltage measurements.

Name	Range	Step	Description
Harm Abs.or Perc.	• Percent • Absolute	-	Defines whether the harmonics are calculated as percentages or absolute values.
Harmonics display	• Per unit • Primary V • Secondary V	-	Defines how the harmonics are displayed: in p.u. values, as primary voltage values, or as secondary voltage values.
UxMaxH	0.00…100 000.00V	0.01V	Displays the maximum harmonics value of the selected voltage input Ux.
Ux Fund	0.00…100 000.00V	0.01V	Displays the voltage value of the fundamental frequency component of the selected voltage input Ux.
Ux harmonics (2nd…31st harmonic)	0.00…100 000.00V	0.01V	Displays the selected harmonic from the voltage input Ux.
Ux Amplitude THD	0.000…100.000V	0.001V	Amplitude ratio THD voltage. Recognized by IEC.
Ux Power THD	0.000…100.000V	0.001V	Power ratio THD voltage. Recognized by the IEEE.

© Arcteq Relays Ltd

Voltage memory

Some protection functions (such as directional overcurrent) use the device's measured current and voltage to determine whether the electrical network fault appears to be inside the protected area. The determination is made by comparing the angle between the operating quantity (zone/tripping area) and the actual measured quantity. The function then produces an output when the required terms are met.

In close-in faults the system voltage on the secondary side may fall down to a few volts or close to nothing. In such cases, when the measured voltage is absent, the fault direction cannot be solved. As a backup, non-directional protection can be used for tripping, but in such cases the selectivity of the network will be reduced. However, an angle memory for voltage can be used to prevent this from happening. An adjustable voltage level with pre-fault voltage angles can be used as a reference for fault direction and/or distance. The reference can be set manually for duration. Configurable voltage memory enables even time-delayed backup tripping to be initiated.

The user can activate voltage memory (and find all related settings) by following this path in device settings: *Measurement → Transformers → VT Module (3U/4U) 1 → Voltage memory* ("Activated"/"Disabled").

The activation of voltage memory depends of following criteria:

1. Normal voltage levels have been present for longer than 2.5 seconds before voltages have dropped.
2. All used line-to-line or line-to-neutral voltages need to be below the set value for the "VMEM activation voltage" parameter.
3. At least one phase current must be above the set value for the "Measured current condition 3I>" parameter. This setting limit is optional.

Figure. 4.2.3 - 28. Directional overcurrent characteristics.

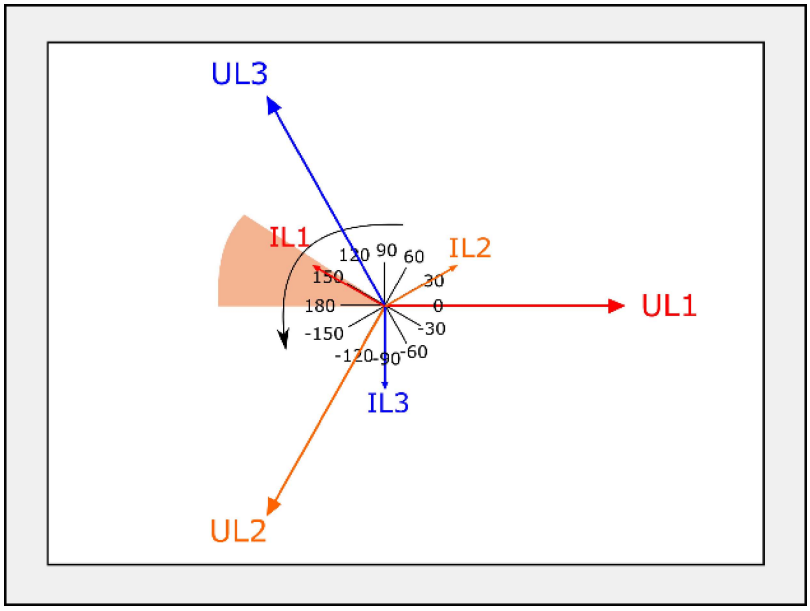

Voltage memory activates when the above-mentioned criteria are met. Voltage memory uses the "VMEM activation voltage" parameter as voltage amplitude even when the actual measured voltage has decreased below it or close to zero. The angle used by this function is the one captured the moment before the fault occurred and voltage memory was activated. When voltage memory is activated, the output "Voltage memory on" signal is activated. This signal can be found in the device's I/O matrix.

While voltage memory is active, voltages are absent and therefore angle measurement is not possible. Healthy state angles (before a fault) are used during a fault. This is why a drift between the assumed voltage angle and the actual measured phase current angle takes place. While voltage memory is used, the angle of phase currents drifts approximately one degree for each passing second (see the graph below).

Figure. 4.2.3 - 29. Voltage angle drift.

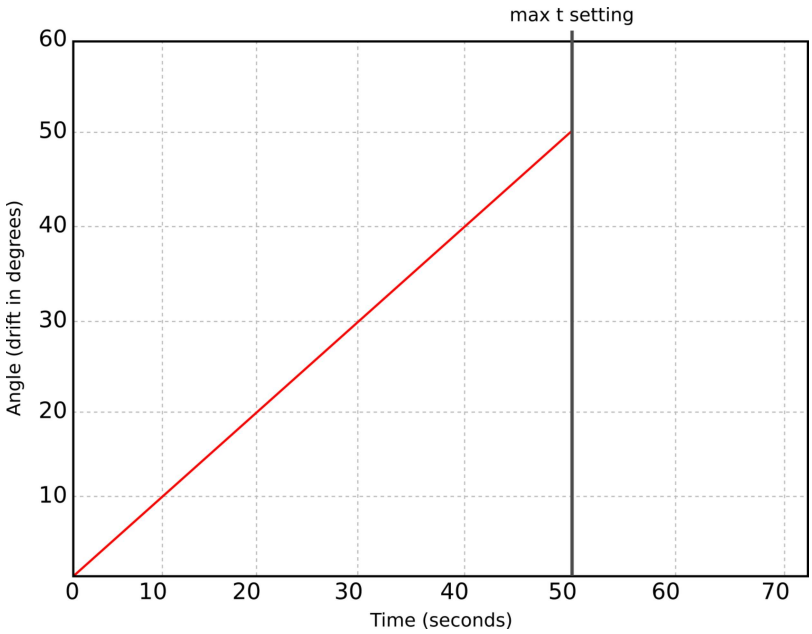

The blocking signal for voltage memory can be found among other stage-related settings in the tab *VT Module (3U/4U) 1*. The blocking signal is checked in the beginning of each program cycle.

VMEM activation voltage and Measured current condition 3I>

When the voltage memory function is enabled, it activates when all line voltages drop below the "VMEM activation voltage" threshold limit. When "Measured current condition 3I>" is used, activation cannot be based on just the voltage. Therefore, at least one of the three-phase currents must also rise above the set current pick-up setting.

VMEM max active time

Voltage memory can be active for a specific period of time, set in "VMAX active time". It can be anything between 0.02...50.00 seconds. The function supports the definite time (DT) delay type. It depends on the application for how long the memory should be used. During massive bolted faults, the fault should be cleared and the breaker opened as soon as possible; therefore, a short operating time for voltage memory is usually applied. A typical delay for voltage memory is between 0.5...1.0 s. When the operating time passes and voltage memory is no longer used, the protection function operation is blocked and possible START or TRIP signals are reset. The memory uses longer operating times when a backup protection is applied.

Forced CT f tracking on VMEM

While fixed frequency tracking is used, all protection stage-based sampling (apart from frequency protection) is based on a set fixed frequency such as 50 Hz or 60 Hz. When the frequency drops massively during a fault while angle memory is in use, it is also possible that the frequency of the system starts to fluctuate. In such cases, if current sampling of used protection stages is based on 50/60 Hz, there could be an error in current magnitude and in angle measurement. To minimize these errors, it is recommended that the frequency is measured and protection-based sampling from the current is performed while voltages are gone.

© Arcteq Relays Ltd

When the "Forced CT f tracking" parameter is activated and voltages are gone, the frequency from the selected current-based reference channel 3 (the current from IL3) is used for current sampling. This eliminates any possible measurement errors in the fixed frequency mode.

For example, let us say a 500 A current is measured on the primary side while the fixed frequency is set to 50 Hz. This results in the frequency dropping to 46 Hz, while the actual current measurement would be 460 A. Therefore, the system would have an error of 40 A.

Table. 4.2.3 - 70. Voltage memory parameters.

Name	Range	Step	Default	Description
Voltage memory	• Disabled • Activated	-	Enabled	Enables or activates voltage memory function.
VMEM activation voltage	0.10…50.00 %Un	0.01 %Un	15.00 %Un	Voltage threshold for activating voltage memory. When all voltage measurements are under this setting value, voltage memory is activated.
VMEM max active time	0.020…50.000 s	0.005 s	15.000 s	Maximum duration for voltage memory. After the time set in this parameter has passed, voltage memory is reset.
Enable forced CT f tracting on VMEM	• Disabled • Activated	-	Disabled	When in use, frequency tracking is forced to "reference 3" when no voltage can be measured. If this parameter is used, frequency reference 3 should be set to "IL3".
Forced CT tracking status	• Disabled • Activated	-	-	Displays the current status of the "forced CT tracking".
Measured current condition 3I>	• Disabled • Activated	-	Disabled	Enables or activates current condition monitoring. When in use, at least one of the phase currents must rise above a set value for the voltage memory to activate.
Minimum current for VMEM	0.01…50.00 xIn	0.01 xIn	1.00 xIn	Minimum required current for current condition.
Current condition status	• Disabled • Activated	-	-	Displays the current monitoring status.

Table. 4.2.3 - 71. Voltage memory event messages.

Event block name	Event names
M1VT1	Voltage memory enabled/disabled
M1VT1	Voltage low detected ON/OFF
M1VT1	Current high detected ON/OFF
M1VT1	Frequency tracked from CT ON/OFF
M1VT1	Using Voltage memory ON/OFF
M1VT1	Voltage memory blocked ON/OFF

4.2.4 Power and energy calculation

Power is divided into three magnitudes: apparent power (S), active power (P) and reactive power (Q). Energy measurement calculates magnitudes for active and reactive energy. Energy can flow to the forward direction (exported) or to the reverse direction (imported).

If a unit has more than one CT measurement module, the user can choose which module's current measurement is used by the power calculation. The power and energy measurements are updated every 5 milliseconds.

Line-to-neutral voltages available

Power is calculated from line-to-neutral voltages and phase currents. If line-to-line voltages are connected, the device can calculate line-to-neutral voltages based on the measured zero sequence voltage. The following equations apply for power calculations with the line-to-neutral mode and the line-to-line voltage mode (with U0 connected and measured):

Figure. 4.2.4 - 30. Three-phase power (S) calculation.

$$S_{L1} = U_{L1} \times I_{L1}$$
$$S_{L2} = U_{L2} \times I_{L2}$$
$$S_{L3} = U_{L3} \times I_{L3}$$
$$S = S_{L1} + S_{L2} + S_{L3}$$

Figure. 4.2.4 - 31. Three-phase active power (P) calculation.

$$P_{L1} = U_{L1} \times I_{L1} \cos\varphi$$
$$P_{L2} = U_{L2} \times I_{L2} \cos\varphi$$
$$P_{L3} = U_{L3} \times I_{L3} \cos\varphi$$
$$P = P_{L1} + P_{L2} + P_{L3}$$

In these equations, phi (φ) is the angle difference between voltage and current.

Figure. 4.2.4 - 32. Three-phase reactive power (Q) calculation.

$$Q_{L1} = U_{L1} \times I_{L1} \sin\varphi$$
$$Q_{L2} = U_{L2} \times I_{L2} \sin\varphi$$
$$Q_{L3} = U_{L3} \times I_{L3} \sin\varphi$$
$$Q = Q_{L1} + Q_{L2} + Q_{L3}$$

Active power can be to the forward or the reverse direction. The direction of active power can be indicated with the power factor (Cos (φ), or Cosine phi), which is calculated according the following formula:

© Arcteq Relays Ltd

$$3PH\ Cos(phi) = {}^{P}/_{S}$$

$$L1\ Cos(phi) = {}^{P_{L1}}/_{S_{L1}}$$

$$L2\ Cos(phi) = {}^{P_{L2}}/_{S_{L2}}$$

$$L3\ Cos(phi) = {}^{P_{L3}}/_{S_{L3}}$$

The direction of reactive power is divided into four quadrants. Reactive power may be inductive or capacitive on both forward and reverse directions. Reactive power quadrant can be indicated with Tan (φ) (tangent phi), which is calculated according the following formula:

$$3PH\ Tan(phi) = {}^{Q}/_{P}$$

$$L1\ Tan(phi) = {}^{Q_{L1}}/_{P_{L1}}$$

$$L2\ Tan(phi) = {}^{Q_{L2}}/_{P_{L2}}$$

$$L3\ Tan(phi) = {}^{Q_{L3}}/_{P_{L3}}$$

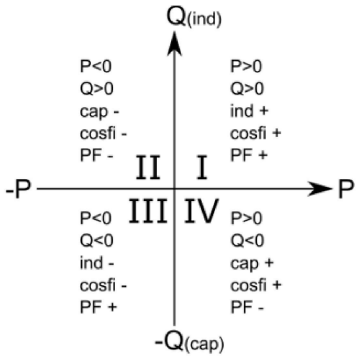

Power factor calculation is done similarly to the Cosine phi calculation but the polarity is defined by the reactive power direction. Therefore, the power factor is calculated with the following formula:

$$3PH\ PF = {}^{P}/_{S} * {}^{Q}/_{|Q|}$$

$$L1\ PF = {}^{P_{L1}}/_{S_{L1}} * {}^{Q_{L1}}/_{|Q_{L1}|}$$

$$L2\ PF = {}^{P_{L2}}/_{S_{L2}} * {}^{Q_{L2}}/_{|Q_{L2}|}$$

$$L3\ PF\ = {}^{P_{L3}}/_{S_{L3}} * {}^{Q_{L3}}/_{|Q_{L3}|}$$

Only line-to-line voltages available

If the line-to-line voltages are measured but the zero sequence voltage is not measured or is not otherwise known, the three-phase power calculation is based on Aron's theorem:

$$S = U_{23} \times I_{L1} \cos(30) + U_{31} \times I_{L2} \cos(30)$$

$$P = U_{23} \times I_{L1} \cos(30 - \varphi) + U_{31} \times I_{L2} \cos(30 + \varphi)$$

$$Q = U_{23} \times I_{L1} + \sin(30 - \varphi) + U_{31} \times I_{L2} \sin(30 + \varphi)$$

Both cos(φ) and tan(φ) are calculated in the same way as in the line-to-neutral mode.

Troubleshooting

Check the "Troubleshooting" section in chapters "Current measurement and scaling" and "Voltage measurement and scaling" for more information. Most power and energy measurement problems are usually related to the same issues (i.e. wiring errors, wrong measurement modes, faulty frequency settings, etc.).

Settings

Table. 4.2.4 - 72. Power and energy measurement settings

Name	Range	Step	Default	Description
Power measurement currents from	• CT1 • CT2 • CT3	-	CT1	Defines which current transformer module is used in power and energy calculation.
3ph active energy measurement	• Disabled • Enabled	-	Disabled	Enables/disables the active energy measurement.
3ph reactive energy measurement	• Disabled • Enabled	-	Disabled	Enables/disables the reactive and apparent energy measurement.
3ph energy megas or kilos	• Mega • Kilo	-	Mega	Defines whether energy is measured with the prefix 'kilo' (10^3) or 'mega' (10^6).
Edit energy values	• Disabled • Enabled	-	Disabled	When this parameter is enabled it is possible to manually edit exported and imported active energy values. NOTICE! "E 3ph M or k" parameter has to be set to "kilo" for this feature to function.
Invert imp/ exp energy directions	• Not inverted • Inverted	-	Not inverted	Inverts the direction of imported and exported energy without affecting the direction of power calculation.
Nominal power kVA	0.10...500000.00kVA	0.01kVA	100kVA	Defines the nominal power of the protected object.
PQ Quadrant	• Undefined • Q1 Fwd Ind • Q2 Rev Cap • Q3 Rev Ind • Q4 Fwd Cap	-	Undefined	Indicates what the power PQ quadrant is at that moment.
VA Quadrant	• Undefined • Q1 Fwd Cap AV • Q2 Rev Ind AV • Q3 Rev Cap VA • Q4 Fwd Ind VA	-	Undefined	Indicates what the power VA quadrant is at that moment.
Reset energy calculators ("Reset 3ph Energies")	• - • Reset	-	-	Resets the memory of the three-phase energy calculators. Goes automatically back to the "-" state after the reset is finished.
Phase active energy measurement	• Disabled • Enabled	-	Disabled	Enables/disables the active energy per phase measurement.

© Arcteq Relays Ltd

Name	Range	Step	Default	Description
Phase reactive energy measurement	• Disabled • Enabled	-	Disabled	Enables/disables the reactive energy per phase measurement.
Phase energies megas or kilos	• Mega • Kilo	-	Mega	Defines whether energy (per phase) is measured with the prefix 'kilo' (10^3) or 'mega' (10^6).
Reset energy calculators (per phase) ("Reset E per phase")	• - • Reset	-	-	Resets the memory of the indivisual phase energy calculator. Goes automatically back to the "-" state after the reset is finished.

Table. 4.2.4 - 73. Energy Dose Counter 1 settings

Name	Range	Step	Default	Description
Energy dose counter mode	• Disabled • Activated	-	Disabled	Enables/disables energy dose counters generally.
Energy dose counter LN mode	• On • Blocked • Test • Test/Blocked • Off	-	On	Set mode of DOS block. This parameter is visible only when *Allow setting of individual LN mode* is enabled in *General* menu.
Energy does counter LN behaviour	• On • Blocked • Test • Test/Blocked • Off	-	-	Displays the mode of DOS block. This parameter is visible only when *Allow setting of individual LN mode* is enabled in *General* menu.
Clear pulse counter	• - • Clear	-	-	Resets the "DC 1…4 Pulses sent" counters back to zero.
DC 1…4 enable	• Disabled • Enabled	-	Disabled	Enables/disables the energy dose counter 1…4 individually.
DC 1…4 Input signal select	• 3PH.Fwd.Act.EP • 3PH.Rev.Avt.EP • 3PH.Fwd.React.EQ.CAP • 3PH.Fwd.React.EQ.IND • 3PH.Rev.React.EQ.CAP • 3PH.Rev.React.EQ.IND	-	3PH.Fwd.Act.EP	Selects whether the energy is active or reactive, whether the direction of the energy is forward of reverse, and whether reactive energy is inductive or capacitive.
DC 1…4 Input signal	$-1 \times 10^6 \ldots 1 \times 10^6$	0.01	-	The total amount of energy consumed.
DC 1…4 Pulse magnitude	0…1800kW/var	0.005kW/var	1kW/Var	The set pulse size. An energy pulse is given every time the set magnitude is exceeded.

Name	Range	Step	Default	Description
DC 1…4 Pulse length	0…1800s	0.005s	1s	The total length of a control pulse.
DC1…4 Pulses sent	0…4 294 967 295	1	-	Indicates the total number of pulses sent.

Table. 4.2.4 - 74. DC 1…4 Pulse out settings

Name	Range	Step	Default	Description
DC 1…4 Pulse out	OUT1…OUTx	-	None selected	The selection of the controlled physical outputs.

Power measurements

The following power calculations are available when the voltage and the current cards are available.

Table. 4.2.4 - 75. Three-phase power calculations.

Name	Range	Step	Description
3PH Apparent power (S)	$-1x10^6…1x10^6$kVA	0.001kVA	The total three-phase apparent power in kilo-volt-ampere
3PH Active power (P)	$-1x10^6…1x10^6$kW	0.001kW	The total three-phase active power in kilowatts
3PH Reactive power (Q)	$-1x10^6…1x10^6$kVar	0.001kVar	The total three-phase reactive power in kilovars
3PH Apparent power (S MVA)	$-1x10^5…1x10^5$MVA	0.001MVA	The total three-phase apparent power in megawatts
3PH Active power (P MW)	$-1x10^5…1x10^5$MW	0.001MW	The total three-phase active power in mewatts
3PH Reactive power (QMVar)	$-1x10^5…1x10^5$MVar	0.001MVar	The total three-phase active power in megavars
3PH Tan(phi)	$-1x10^6…1x10^6$	0.001	The direction of three-phase active power
3PH Cos(phi)	$-1x10^6…1x10^6$	0.001	The direction of three-phase reactive power
3PH Power factor	$-1x10^6…1x10^6$	0.0001	The three-phase power factor

Table. 4.2.4 - 76. Single-phase power calculations (L1...L3).

Name	Unit	Range	Step	Description
Lx Apparent power (S)	kVA	$-1x10^6…1x10^6$	0.001	The apparent power of Phase Lx in kilo-volt-amperes
Lx Active power (P)	kW	$-1x10^6…1x10^6$	0.001	The active power of Phase Lx in kilowatts
Lx Reactive power (Q)	kVar	$-1x10^6…1x10^6$	0.001	The reactive power of Phase Lx kilovars

© Arcteq Relays Ltd

Name	Unit	Range	Step	Description
Lx Tan(phi)	-	$-1x10^6 \ldots 1x10^6$	0.001	The direction of Phase Lx's active power
Lx Cos(phi)	-	$-1x10^6 \ldots 1x10^6$	0.001	The direction of Phase Lx's reactive power
Lx Power factor	-	$-1x10^6 \ldots 1x10^6$	0.0001	The power factor of Phase Lx

Energy measurements

The following energy calculations are available when the voltage and the current cards are available. Please note that the unit prefix is determined by the user's selection between 'kilo' and 'mega' in "Three-phase energy prefix ("E 3ph M or k")" under the general "Power and energy measurement settings".

Table. 4.2.4 - 77. Three-phase energy calculations.

Name	Range	Step	Description
Exported Active Energy (P) (kWh or MWh)	$-1x10^9 \ldots 1x10^9$	1	The total amount of exported active energy.
Imported Active Energy (P) (kWh or MWh)	$-1x10^9 \ldots 1x10^9$	1	The total amount of imported active energy.
Active Energy (P) Export/Import balance (kWh or MWh)	$-1x10^9 \ldots 1x10^9$	1	The sum of imported and exported active energy.
Exported (Q) while Export (P) (kVarh or MVarh)	$-1x10^9 \ldots 1x10^9$	1	The total amount of exported reactive energy while active power is exported.
Imported (Q) while Export (P). (kVarh or MVarh)	$-1x10^9 \ldots 1x10^9$	1	Total amount of imported reactive energy while active energy is exported.
Reactive energy (Q) balance while export (P) (kVarh or MVarh)	$-1x10^9 \ldots 1x10^9$	1	The sum of imported and exported reactive capacitive energy while active power is exported.
Exported (Q) while Import (P) (kVarh or MVarh)	$-1x10^9 \ldots 1x10^9$	1	The total amount of exported reactive energy while active energy is imported.
Imported (Q) while Import (P) (kVarh or MVarh)	$-1x10^9 \ldots 1x10^9$	1	The total amount of imported reactive energy while active energy is imported.
Reactive energy (Q) balance while Import (P) (kVarh or MVarh)	$-1x10^9 \ldots 1x10^9$	1	The sum of imported and exported reactive energy while active energy is imported.
Apparent Energy (S) while Export (P) (kVAh or MVAh)	$-1x10^9 \ldots 1x10^9$	1	The total amount of exported apparent energy while active energy is exported.
Apparent Energy (S) while Import (P) (kVAh or MVAh)	$-1x10^9 \ldots 1x10^9$	1	The total amount of exported apparent energy while active energy is imported.
Apparent Energy (S) Net	$-1x10^9 \ldots 1x10^9$	1	Total amount of apparent energy.
Real Energy (P) Net	$-1x10^9 \ldots 1x10^9$	1	The sum of active energy supply and demand.
Reactive Energy (Q) Net	$-1x10^9 \ldots 1x10^9$	1	The sum of reactive energy supply and demand.
Real Energy (P) Supply	$-1x10^9 \ldots 1x10^9$	1	Total amount of active energy supplied. Default supply direction towards busbar.

Name	Range	Step	Description
Reactive Energy (Q) Supply	$-1x10^9 \ldots 1x10^9$	1	Total reactive energy supplied. Default supply direction towards busbar.
Real Energy (P) Demand	$-1x10^9 \ldots 1x10^9$	1	Total amount of active energy demand. Default demand direction from busbar.
Reactive Energy (Q) Demand	$-1x10^9 \ldots 1x10^9$	1	Total amount of reactive energy demand. Default demand direction from busbar.

Table. 4.2.4 - 78. Single-phase energy calculations (L1...L3).

Name	Range	Step	Description
Export Active Energy Lx (kWh or MWh)	$-1x10^9 \ldots 1x10^9$	1	The exported active energy of the phase.
Import Active Energy (kWh or MWh)	$-1x10^9 \ldots 1x10^9$	1	The imported active energy of the phase.
Active Energy (P) Export/Import balance (kWh or MWh)	$-1x10^9 \ldots 1x10^9$	1	The sum of the phase's imported and exported active energy.
Exported (Q) while Export (P) Lx (kVarh or MVarh)	$-1x10^9 \ldots 1x10^9$	1	The exported reactive energy of the phase while active energy is exported.
Imported (Q) while Export (P) Lx (kVarh or MVarh)	$-1x10^9 \ldots 1x10^9$	1	The imported reactive energy of the phase while active energy is exported.
Reactive Energy (Q) balance while Export (P) Lx (kVarh or MVarh)	$-1x10^9 \ldots 1x10^9$	1	The sum of the phase's imported and exported reactive energy while active energy is exported.
Exported (Q) while Import (P) Lx (kVarh or MVarh)	$-1x10^9 \ldots 1x10^9$	1	The exported reactive energy of the phase while active energy is imported.
Imported (Q) while Import (P) Lx (kVarh or MVarh)	$-1x10^9 \ldots 1x10^9$	1	The imported reactive energy of the phase while active energy is imported.
Reactive energy (Q) balance while Import (P) Lx (kVarh or MVarh)	$-1x10^9 \ldots 1x10^9$	1	The sum of the phase's imported and exported reactive energy while active energy is imported.
Apparent Energy (S) while Export (P) Lx	$-1x10^9 \ldots 1x10^9$	1	The apparent energy of the phase while active energy is exported.
Apparent Energy (S) while Import (P) Lx	$-1x10^9 \ldots 1x10^9$	1	The apparent energy of the phase while active energy is imported.

Calculation examples

Here is an example of power calculation. Both wiring methods (line-to-line and line-to-neutral) are checked with the same signal injection. The voltage scaling is set to 20 000 : 100 V and the current scaling is set to 1000 : 5 A.

Voltages (line-to-neutral):	Currents:
U_{L1} = 40.825 V, 45.00°	I_{L1} = 2.5 A, 0.00°
U_{L2} = 61.481 V, -159.90°	I_{L2} = 2.5 A, -120.00°

© Arcteq Relays Ltd

Voltages (line-to-neutral):	Currents:
U_{L3} = 97.742 V, 126.21°	I_{L3} = 2.5 A, 120.00°

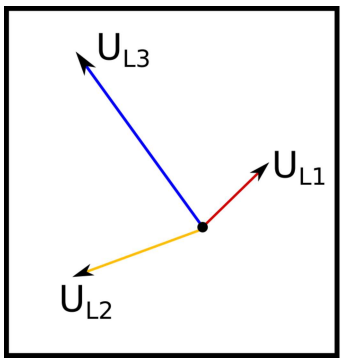

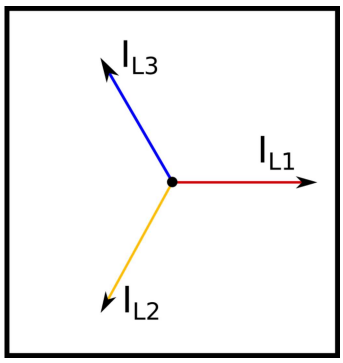

$S_{L1} = U_{L1} \times I_{L1} = 40.825\ \text{V} \times 2.5\ \text{A} = 102\ \text{VA (secondary)}\ 4.08\ \text{MVA (primary)}$

$P_{L1} = U_{L1} \times I_{L1} \cos\varphi = 40.825\ \text{V} \times 2.5\ \text{A} \cos(45° - 0°) = 72.2\ \text{W (secondary)}\ 2.89\ \text{MW (primary)}$

$Q_{L1} = U_{L1} \times I_{L1} \sin\varphi = 40.825\ \text{V} \times 2.5\ \text{A} \sin(45° - 0°) = 72.2\ \text{var (secondary)}\ 2.89\ \text{MVar (primary)}$

$L1\ Tan(phi) = {}^{Q_{L1}}/_{P_{L1}} = {}^{2.89}/_{2.89} = 1.00$ $\qquad$ $L1\ Cos(phi) = {}^{P_{L1}}/_{S_{L1}} = {}^{2.89}/_{4.08} = 0.71$

Name	Value	Name	Value	Name	Value	Name	Value
L1 (S)	4.08 MVA	L2 (S)	6.15 MVA	L3 (S)	9.77 MVA	3PH (S)	20.00 MVA
L1 (P)	2.89 MW	L2 (P)	4.72 MW	L3 (P)	9.71 MW	3PH (P)	17.32 MW
L1 (Q)	2.89 Mvar	L2 (Q)	-3.94 Mvar	L3 (Q)	1.06 Mvar	3PH (Q)	0.01 Mvar
L1 Tan	1.00	L2 Tan	-0.83	L3 Tan	0.11	3PH Tan	0.00
L1 Cos	0.71	L2 Cos	0.77	L3 Cos	0.99	3PH Cos	0.87

Voltages (line-to-line):	Currents:
U_{L12} = 100.00 V, 30.00°	I_{L1} = 2.5 A, 0.00°
U_{L23} = 100.00 V, -90.00°	I_{L2} = 2.5 A, -120.00°
	I_{L3}= 2.5 A, 120.00°

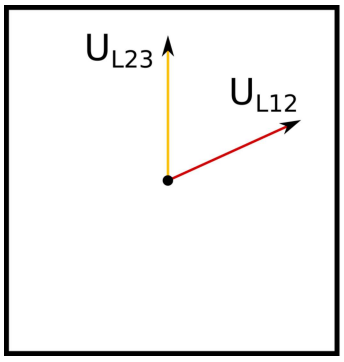

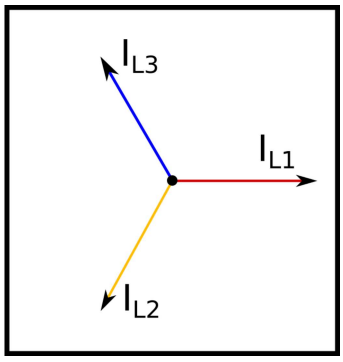

$$S = U_{12} \times I_{L1} + U_{23} \times I_{L2}$$

$$S = 100\ \text{V} \times 2.5\ \text{A} + 100\ \text{V} \times 2.5\ \text{A} = 500\ \text{VA (sec)}\ 20.00\ \text{MVA (pri)}$$

$$P = U_{12} \times I_{L1} \cos(-\varphi) + U_{23} \times I_{L2} \cos(\varphi)$$

$$P = 100\ \text{V} \times 2.5\ \text{A} \cos -(30° - 0°) + 100\ \text{V} \times 2.5\ \text{A} \cos(270° - 240°) = 433\ \text{W}\ (sec)\ 17.32\ \text{MW}\ (pri)$$

$$Q = U_{12} \times I_{L1} + \sin(-\varphi) + U_{23} \times I_{L2} \sin(\varphi)$$

$$Q = 100\ \text{V} \times 2.5\ \text{A} \sin -(30° - 0°) + 100\ \text{V} \times 2.5\ \text{A} \sin(270° - 240°) = 0\ \text{var (sec)}\ 0\ \text{Mvar}\ (pri)$$

$$3PH\ Tan(phi) = {}^{Q}/_{P} = {}^{0.01}/_{17.32} = 0.00 \qquad 3PH\ Cos(phi) = {}^{P}/_{S} = {}^{17.32}/_{20.00} = 0.87$$

Name	Values
3PH (S)	20.00 MVA
3PH (P)	17.32 MW
3PH (Q)	0.00 Mvar
3PH Tan	0.00
3PH Cos	0.87

4.2.5 Frequency tracking and scaling

Measurement sampling can be set to the frequency tracking mode or to the fixed user-defined frequency sampling mode. The benefit of frequency tracking is that the measurements are within a pre-defined accuracy range even when the fundamental frequency of the power system changes.

Frequency independent current and voltage measurement accuracy is achieved with algorithms specified in patent US 10,809,287.

Table. 4.2.5 - 79. Frequency tracking effect (FF changes from 6 Hz to 75 Hz).

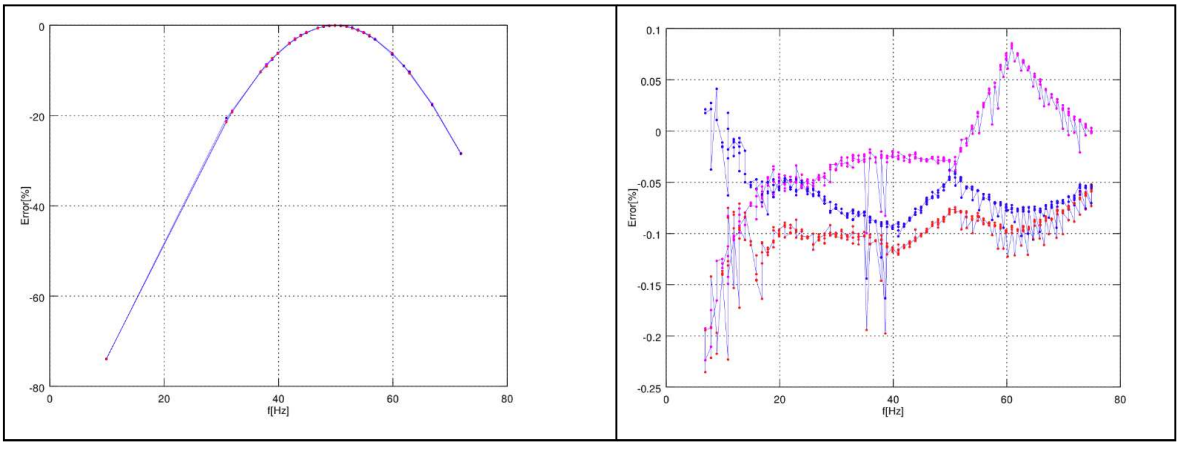

© Arcteq Relays Ltd

The measurement error with a fixed 50 Hz sampling frequency when the frequency changes. The constant current is 5 A, the frequency sweep is from 6 Hz to 75 Hz.	The measurement error with frequency tracking when the frequency changes. The constant current is 5 A, the frequency sweep is from 6 Hz to 75 Hz.

As the figures above show, the sampling frequency has a major effect on the device's measurement accuracy. If the sampling is not tracked to the system frequency, for example a 10 Hz difference between the measured and the set system frequency can give a measurement error of over 5 %. The figures also show that when the frequency is tracked and the sampling is adjusted according to the detected system frequency, the measurement accuracy has an approximate error of 0.1...- 0.2 % error in the whole frequency range.

The device has a measurement accuracy that is independent of the system frequency. This has been achieved by adjusting the sample rate of the measurement channels according to the measured system frequency; this way the FFT calculation always has a whole power cycle in the buffer. The measurement accuracy is further improved by Arcteq's patented calibration algorithms that calibrate the analog channels against eight (8) system frequency points for both magnitude and angle. This frequency-dependent correction compensates the frequency dependencies in the used, non-linear measurement hardware and improves the measurement accuracy significantly. Combined, these two methods give an accurate measurement result that is independent of the system frequency.

Troubleshooting

When the measured current, voltage or frequency values differ from the expected values, the following table offers possible solutions for the problems.

Problem	Check / Resolution
The measured current or voltage amplitude is lower than it should be./ The values are "jumping" and are not stable.	The set system frequency may be wrong. Please check that the frequency settings match the local system frequency, or change the measurement mode to "Tracking" (*Measurement* → *Frequency* → "Sampling mode") so the device adjusts the frequency itself.
The frequency readings are wrong.	In Tracking mode the device may interpret the frequency incorrectly if no current is injected into the CT (or voltage into the VT). Please check the frequency measurement settings (*Measurement* → *Frequency*).

Settings

Table. 4.2.5 - 80. Settings of the frequency tracking.

Name	Range	Step	Default	Description
Sampling mode	• Fixed • Tracking	-	Fixed	Defines which measurement sampling mode is in use: the fixed user-defined frequency, or the tracked system frequency.
System nominal frequency	7.000…75.000Hz	0.001Hz	50Hz	The user-defined system nominal frequency that is used when the "Sampling mode" setting has been set to "Fixed".
Tracked system frequency	0.000…75.000Hz	0.001Hz	-	Displays the rough measured system frequency.

Name	Range	Step	Default	Description
Sampling frequency in use	0.000…75.000Hz	0.001Hz	-	Displays the tracking frequency that is in use at that moment.
Frequency reference 1	• None • CT1IL1 • CT2IL1 • VT1U1 • VT2U1	-	CT1IL1	The first reference source for frequency tracking.
Frequency reference 2	• None • CT1IL2 • CT2IL2 • VT1U2 • VT2U2	-	CT1IL2	The second reference source for frequency tracking.
Frequency reference 3	• None • CT1IL3 • CT2IL3 • VT1U3 • VT2U3	-	CT1IL3	The third reference source for frequency tracking.
Frequency tracking quality	• No trackable channels • Reference 1 trackable • Reference 2 trackable • References 1 & 2 trackable • Reference 3 trackable • Reference 1 & 3 trackable • References 2 & 3 trackable • All references trackable	-	-	Defines the frequency tracker quality. If the measured current (or voltage) amplitude is below the threshold, the channel tracking quality is 0 and cannot be used for frequency tracking. If all channels' magnitudes are below the threshold, there are no trackable channels.
Frequency measurement in use	• No track ch • Ref1 • Ref2 • Ref3	-	-	Indicates which reference is used at the moment for frequency tracking.
Start behavior	• Start tracking immediately • First nominal or tracked	-	Start tracking immediately	Defines the how the tracking starts. Tracking can start immediately, or there can be a set delay time between the receiving of the first trackable channel and the start of the tracking.
Start sampling with	• Use track frequency • Use nom frequency	-	Use track frequency	Defines the start of the sampling. Sampling can begin with a previously tracked frequency, or with a user-set nominal frequency.
Use nominal frequency until	0…1800.000s	0.005s	0.100s	Defines how long the nominal frequency is used after the tracking has started. This setting is only valid when the "Sampling mode" setting is set to "Tracking" and when the "Start behavior" is set to "First nominal or tracked".

© Arcteq Relays Ltd

Name	Range	Step	Default	Description
Tracked f channel A	0.000…75.000Hz	0.001Hz	-	Displays the rough value of the tracked frequency in Channel A.
Tracked f channel B	0.000…75.000Hz	0.001Hz	-	Displays the rough value of the tracked frequency in Channel B.
Tracked f channel C	0.000…75.000Hz	0.001Hz	-	Displays the rough value of the tracked frequency in Channel C.
System measured frequency	• One f measured • Two f measured • Three f measured	-	-	Displays the amount of frequencies that are measured.
f.atm. Protections	0.000…75.000Hz	0.001Hz	-	Frequency measurement value used by protection functions. When frequency is not measurable this value returns to value set to "System nominal frequency" parameter.
f.atm. Display	0.000…75.000Hz	0.001Hz	-	Frequency measurement value used in display. When frequency is not measurable this value is "0 Hz".
f measurement from	• Not measurable • Avg Ref 1 • Avg Ref 2 • Avg Ref 3 • Track Ref 1 • Track Ref 2 • Track Ref 3 • Fast Ref 1 • Fast Ref 2 • Fast Ref 3	-	-	Displays which reference is used for frequency measurement.
SS1.meas.frqs	0.000…75.000Hz	0.001Hz	-	Displays frequency used by "system set" channel 1 and 2.
SS2.meas.frqs				
SS1f meas.from	• Not measurable • Fast Ref U3 • Fast Ref U4	-	-	Displays which voltage channel frequency reference is used by "system set" voltage channel.
SS2f meas.from	• Not measurable • Fast Ref U4	-	-	Displays if U4 channel frequency reference is measurable or not when the channel has been set to "system set" mode.

4.2.6 Demand measurement

This function calculates the average magnitude of a selected measurement. The function records a sample of the selected measurement once per second. The average value is updated once per minute. User can select the time frame of the average calculation between 1 to 30 minutes.

General settings

Table. 4.2.6 - 81. General settings of the function.

Name	Range	Step	Default	Description
Clear DMA memory	• - • Clear	-	-	Resets the demand measurement average to zero.
Demand time	1…30 min	1 min	10 min	Selects the time range used by the average demand calculation.
Demand measurement threshold (IL1&IL2&IL3)	0.00…0.10 xIn	0.01 xIn	0.00 xIn	Average values are calculated if the measured phase currents are above this value. If set to zero, average values are always calculated.
IL1 measurement	0.000…1250.000 xIn	0.001 xIn	-	Phase current measurement value at the moment.
IL2 measurement				
IL3 measurement				
S measurement	-1 000 000…1 000 000 kVA	0.001 kVA	-	Apparent power measurement value at the moment.
P measurement	-1 000 000…1 000 000 kW	0.001 kW	-	Active power measurement value at the moment.
Q measurement	-1 000 000…1 000 000 kvar	0.001 kvar	-	Reactive power measurement value at the moment.
PF measurement	-1.000…1.000	0.001	-	Power factor measurement value at the moment.
IL1 harmonic measurement	0.000…1250.000 %	0.001 %	-	Phase harmonic current measurement value at the moment. Measured harmonic depends on the harmonic chosen with "ILx harmonic selector" parameters.
IL2 harmonic measurement				
IL3 harmonic measurement				

Fundamental frequency values

Table. 4.2.6 - 82. Measurement settings

Name	Range	Step	Default	Description
IL1 alarm	• Off • Over >= • Under <=	-	• Off	Sets the condition for alarm limit.
IL2 alarm				
IL3 alarm				
S alarm				

© Arcteq Relays Ltd

Name	Range	Step	Default	Description
P alarm				
Q alarm				
PF alarm				
IL1 harmonic alarm				
IL2 harmonic alarm				
IL3 harmonic alarm				
IL1 harmonic selector	2nd…11th	1	2nd	Defines the supervised harmonic of the phase current. Visible if any of the "ILx harmonic alarm" parameters are activated.
IL2 harmonic selector				
IL3 harmonic selector				
Pha.curr.IL1 demand	0.000…1250.000 xIn	0.001 xIn	-	Average phase current recorded in the time frame defined with "Demand time" parameter.
Pha.curr.IL2 demand				
Pha.curr.IL3 demand				
POW1 3PH Apparent power (S) demand	-1 000 000…1 000 000 kVA	0.001 kVA	-	Average apparent power recorded in the time frame defined with "Demand time" parameter.
POW1 3PH Active power (P) demand	-1 000 000…1 000 000 kW	0.001 kW	-	Average active power recorded in the time frame defined with "Demand time" parameter.
POW1 3PH Reactive power (Q) demand	-1 000 000…1 000 000 kvar	0.001 kvar	-	Average reactive power recorded in the time frame defined with "Demand time" parameter.
POW1 3PH PF demand	-1.000…1.000	0.001	-	Average power factor recorded in the time frame defined with "Demand time" parameter.
IL1 harmonic demand	0.00…100 000.00 %	0.01 %	-	Average phase harmonic current recorded in the time frame defined with "Demand time" parameter.
IL2 harmonic demand				
IL3 harmonic demand				
IL1 alarm limit	0.10…50.00 xIn	0.01 xIn	1.20 xIn	Maximum/minimum allowed average phase current.
IL2 alarm limit				
IL3 alarm limit				
S alarm limit	-1 000 000…1 000 000 kVA	0.001 kVA	0.000 kVA	Maximum/minimum allowed average apparent power.
P alarm limit	-1 000 000…1 000 000 kW	0.001 kW	0.000 kW	Maximum/minimum allowed average active power.

Name	Range	Step	Default	Description
Q alarm limit	-1 000 000…1 000 000 kvar	0.001 kvar	0.000 kvar	Maximum/minimum allowed average reactive power.
PF alarm limit	-1.00…1.00	0.001	-0.95	Maximum/minimum allowed average power factor.
IL1 harmonic alarm limit	5.0…100.0 %	0.1 %	20.0 %	Maximum/minimum allowed average phase harmonic current.
IL2 harmonic alarm limit				
IL3 harmonic alarm limit				

Events

The demand measurement function (abbreviated "DMA" in event block names) generates events from the status changes in the events listed below. The user can select which event messages are stored in the main event buffer: ON, OFF, or both. The events triggered by the function are recorded with a time stamp.

The function's output can be used for direct I/O controlling and user logic programming.

Table. 4.2.6 - 83. Event messages.

Event block name	Event names
DMA1	IL1 demand alarm
DMA1	IL2 demand alarm
DMA1	IL3 demand alarm
DMA1	Apparent power demand alarm
DMA1	Active power demand alarm
DMA1	Reactive power demand alarm
DMA1	Power factor demand alarm
DMA1	IL1 demand harmonic alarm
DMA1	IL2 demand harmonic alarm
DMA1	IL3 demand harmonic alarm
DMA1	Demand blocked

4.3 General menu

The *General* menu consists of basic settings and indications of the device. Additionally, the all activated functions and their status are displayed in the *Protection*, *Control* and *Monitor* profiles.

© Arcteq Relays Ltd

Table. 4.3 - 84. The *General* menu read-only parameters

Name	Description
Serial number	The unique serial number identification of the unit.
Firmware version	The firmware software version of the unit.
Hardware configuration	The order code identification of the unit.
Software configuration	Function packages included in the device. See "Ordering information" chapter for more information.
System phase rotating order at the moment	The selected system phase rotating order. Can be changed with parameter "System phase rotating order".
UTC time	The UTC time value which the device's clock uses.

Table. 4.3 - 85. Parameters and indications in the *General* menu.

Name	Range	Default	Description
Device name	-	Unitname	The file name uses these fields when loading the .aqs configuration file from the device.
Device location	-	Unitlocation	
Enable stage forcing	• Disabled • Enabled	Disabled	When this parameter is enabled it is possible for the user to force the protection, control and monitoring functions to different statuses like START and TRIP. This is done in the function's *Info* page with the *Force status to* parameter.
Allow setting of device mode	• Prohibited • From HMI/ setting tool only • Allowed	Prohibited	Allows global mode to be modified from setting tool, HMI and IEC61850. Prohibited: Cannot be changed. From HMI/setting tool only: Can only be changed from the setting tool or HMI Allowed: Can be changed from the setting tool, HMI, and IEC 61850 client.
Allow setting of individual LN mode	• Prohibited • From HMI/ setting tool only • Allowed	Prohibited	Allow local modes to be modified from setting tool, HMI and IEC61850. Prohibited: Cannot be changed. From HMI/setting tool only: Can only be changed from the setting tool or HMI Allowed: Can be changed from the setting tool, HMI, and IEC 61850 client.
System phase rotating order	• A-B-C • A-C-B	A-B-C	Allows the user to switch the expected order in which the phase measurements are wired to the unit.

Name	Range	Default	Description
Language	• User defined • English • Finnish • Chinese • Spanish • French • German • Russian • Ukrainian • Kazakh	English	Changes the language of the parameter descriptions in the HMI. If the language has been set to "Other" in the settings of the AQtivate setting tool, AQtivate follows the value set into this parameter.
AQtivate ethernet port	• All • COM A • Double Ethernet card	All	If the device has a double Ethernet option card it is possible to choose which ports are available for connecting with AQtivate software.
Clear events	• - • Clear	-	Clears the event history recorded in the device.
Display brightness	0…8	4	Changes the display brightness. Brightness level 0 turns the display off.
Display sleep timeout	0…3600s	0s	If no buttons are pressed after a set time, the display changes the brightness to whatever is set on the "Display sleep brightness" parameter. If set to 0 s, this feature is not in use. When the device is in sleep mode, all button actions are disabled. Pressing any of the buttons on the front panel will wake up the display, which enables the buttons again.
Display sleep brightness	0…8	0	Defines the brightness of the display when the set display sleep timeout has elapsed. The brightness level "0" turns the display off.
Return to default view	0…3600s	0s	If the user navigates to a menu and gives no input after a period of time defined with this parameter, the unit automatically returns to the default view. If set to 0 s, this feature is not in use.
LED test	• - • Activated	-	When activated, all LEDs are lit up. LEDs with multiple possible colors blink each color.
HMI restart	• - • Restart	-	When activated, display restarts.
Display color theme	• Light theme • Dark theme	Light theme	Defines the color theme used in the HMI.
Reset latches	• - • Reset	-	Resets the latched signals in the logic and the matrix. When a reset command is given, the parameter automatically returns back to "-".
Measurement recorder	• Disabled • Enabled	Disabled	Enables the measurement recorder tool, further configured in *Tools → Misc → Measurement recorder.*

© Arcteq Relays Ltd

Name	Range	Default	Description
I/0 default object selection	• OBJ1 • OBJ2 • OBJ3 • OBJ4 • OBJ5 • OBJ6 • OBJ7 • OBJ8 • OBJ9 • OBJ10	OBJ1	"I" and "0" push buttons on the front panel of the device have an indication LED. This parameter defines which objects' status push buttons follow when lighting up the LEDs.
Device Mode	• On • Blocked • Test • Test/ Blocked • Off	On	Set mode of device block. This parameter is visible only when *Allow setting of device mode* is enabled in *General* menu.
Reconfigure mimic	• - • Reconfigure	-	Reloads the mimic to the unit.

Table. 4.3 - 86. General menu logical inputs.

Name	Description
Reset last fault registers	Signal set to this point can be used for resetting latest recorded fault register.
Reset latches	Signals set to this point can be used for resetting latched signals. An alternative to using the "Back" button on the front panel of the device.
Ph.Rotating Logic control 0=A-B-C, 1=A-C-B	Signals set to this point can be used for switching the expected phase rotating order.

4.4 Alarming function

Figure. 4.4 - 33. Front panel view

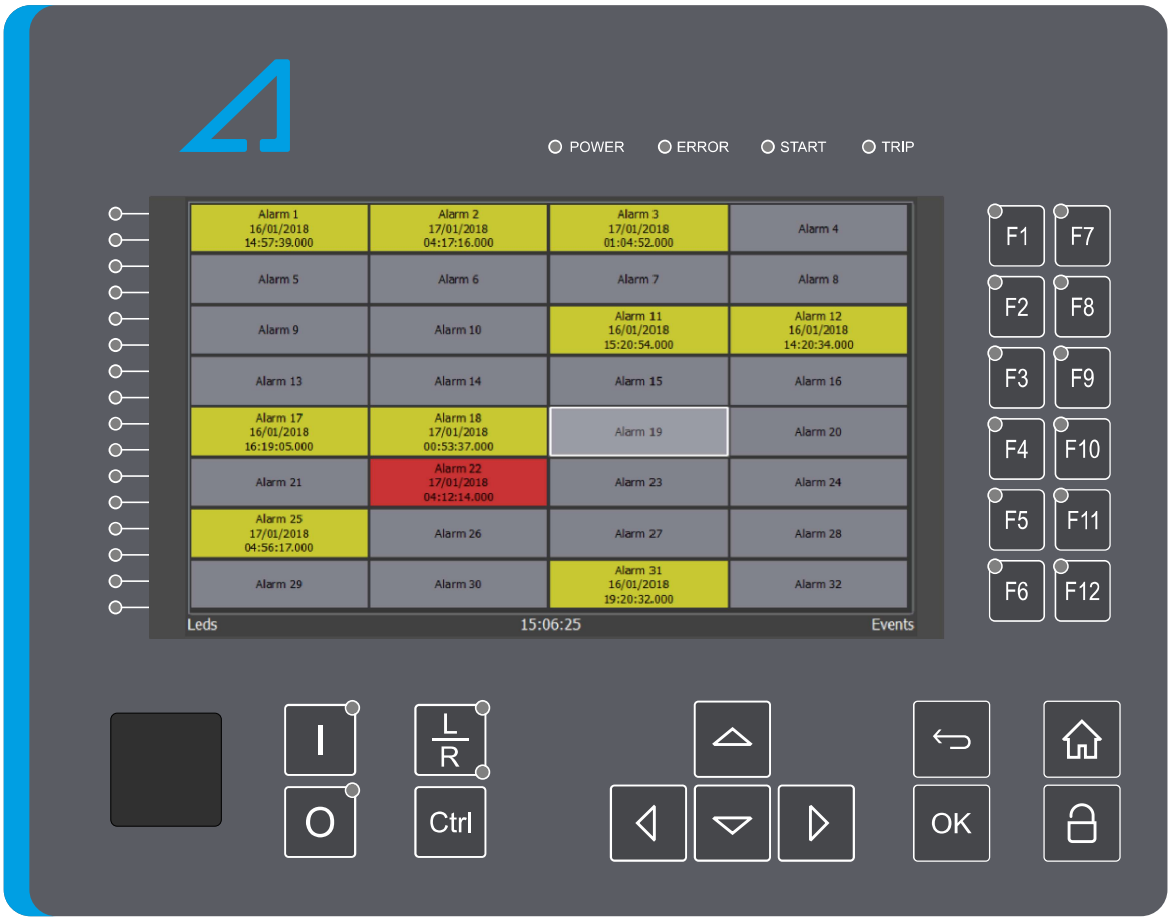

The alarming unit has 128 alarms the user can set. The user defines each alarm description and activating signal. These settings are done in the *Alarm settings* menu (*Control → Device I/O → Alarm settings*).

The alarming unit generates events with time stamps into the event history and the alarm statuses are shown on the device's display. The alarm statuses can also be read in the remote terminal unit (RTU).

Alarm descriptions

The user-edited alarm text is displayed in the *Alarm* view in the HMI when the alarm has been activated. The user can update the descriptions in the settings (*Commands → Write to relay → Parameters or Commands → Write changes*).

Table. 4.4 - 87. Alarm user description.

Name	Range	Default	Description
User editable description Alarm x	1...31 characters	Alarm x	Description of the alarm. This description is used in several menu types for easier identification.

© Arcteq Relays Ltd

Assigning alarm activation signals

Alarm activation signals are divided into eight tabs in groups of 16. The user can assign a digital input, a logic signal or a GOOSE message into each of the alarms. When any of the alarms have been activated by the assigned signal, the alarm appears in the *Alarms* view in the device's HMI.

Figure. 4.4 - 34. Digital inputs assigned as alarm activating signals.

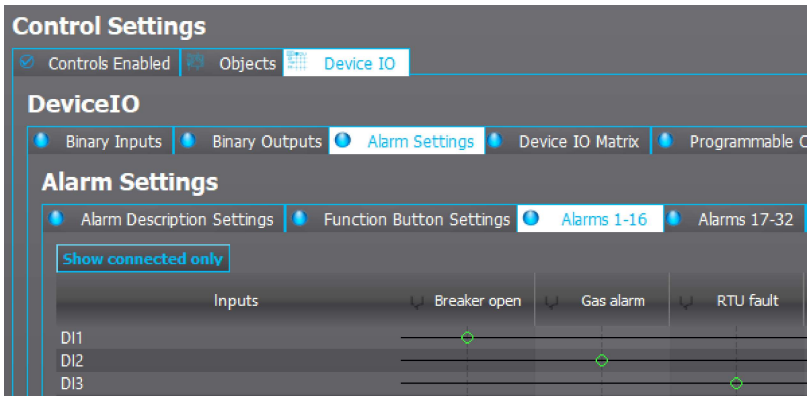

The user can assign signals into alarms by clicking on the matrix. When the matrix is done, it must be sent to the device for the changes to take effect (*Commands → Write to relay → Logic*).

If the alarm signal's ON state has been checked in the *Event Mask*, an ALARM ON event is recorded with a time stamp into the event history. These alarms are also reported in the communication protocol if one is in use.

Changing the look of the *Alarms* view

Figure. 4.4 - 35. Carousel designer view of the *Alarms* view settings.

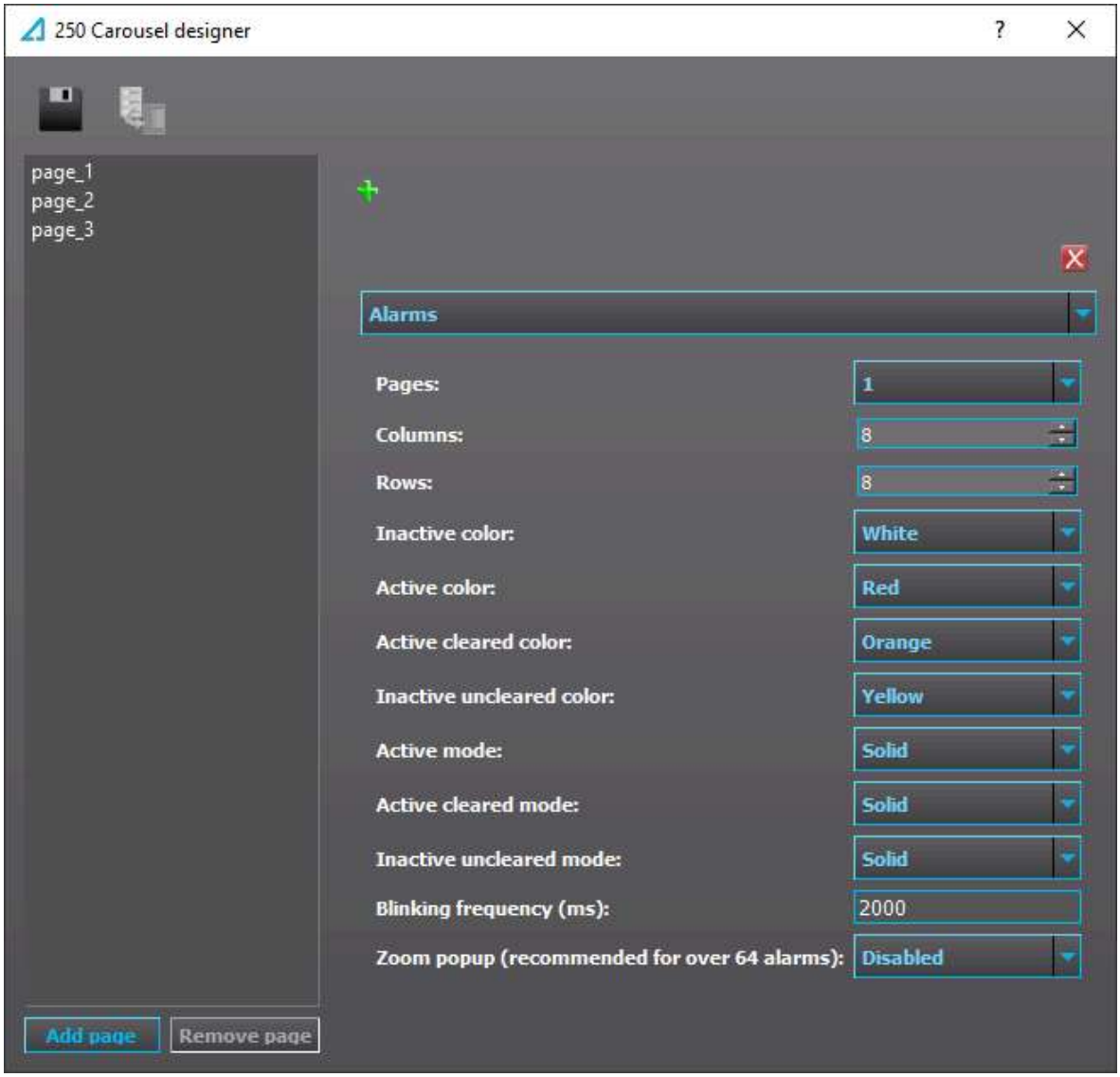

Changing the look of the *Alarms* viewis done in Carousel designer. Carousel designer is found in *Tools → Carousel designer*.

The column and row settings allow the user to define the size, shape and number of alarms displayed in the *Alarms* view. Any number of alarms between 1 and 128 can be displayed. The color displayed in different states of the alarm can be gray, red, green, yellow, orange, or blue.

Table. 4.4 - 88. Alarm view settings

Parameter	Description
Pages	Number of pages used. Pages can be scrolled with left and right arrow buttons. Each page used as many columns and rows as is defined with following two parameters.
Columns	Number of columns used per page.
Rows	Number of rows used per page.

© Arcteq Relays Ltd

Parameter	Description
Inactive color.	Color displayed for an alarm that hasn't been activated.
Active color.	Color displayed for an alarm that has a signal currently active.
Active cleared color.	Color displayed for an alarm that has a signal currently active AND it has been acknowledged with "Reset command". If "Reset command" is given the alarm will return to "Inactive color" when the activating signal is reset too.
Inactive uncleared color.	Color displayed for an alarm that had a signal active in the past but hasn't been acknowledged with "Reset command" yet. After "Reset command" is given the alarm will return to "Inactive color".
Active / Active cleared / Inactive uncleared mode	Selection between solid and blinking modes. If blinking mode is selected the color of alarm will alternate between its color and inacive color.
Blinking frequency	Sets how frequently blinking states switch colors.
Zoom pop-up	When enabled pressing up arrow button will zoom alarm boxes. Zoomed alarm can then be selected with up, down, left and right arrow buttons. Press back-button to exit zoomed view.

Figure. 4.4 - 36. Alarm color behaviour with active alarm clearing enabled and disabled.

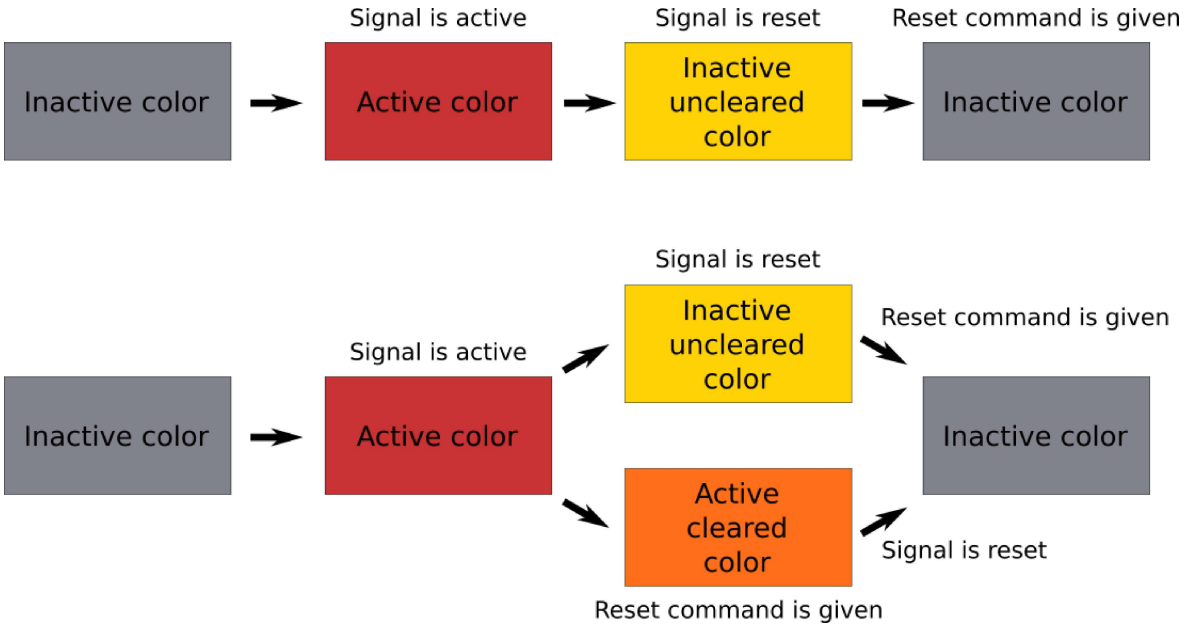

By default active alarms cannot be cleared. This can be changed by setting *Clear active alarms* to *Enabled* at *General → Device info* menu. When enabled the alarms otherwise change color just the same way as with default settings but it is also possible to clear an alarm while the activation signal is still active. If alarm is cleared when signal is active, color will change to what has been set to *Active cleared color* in Carousel designer (orange by default).

Figure. 4.4 - 37. Comparision between clear active alarms disabled and enabled.

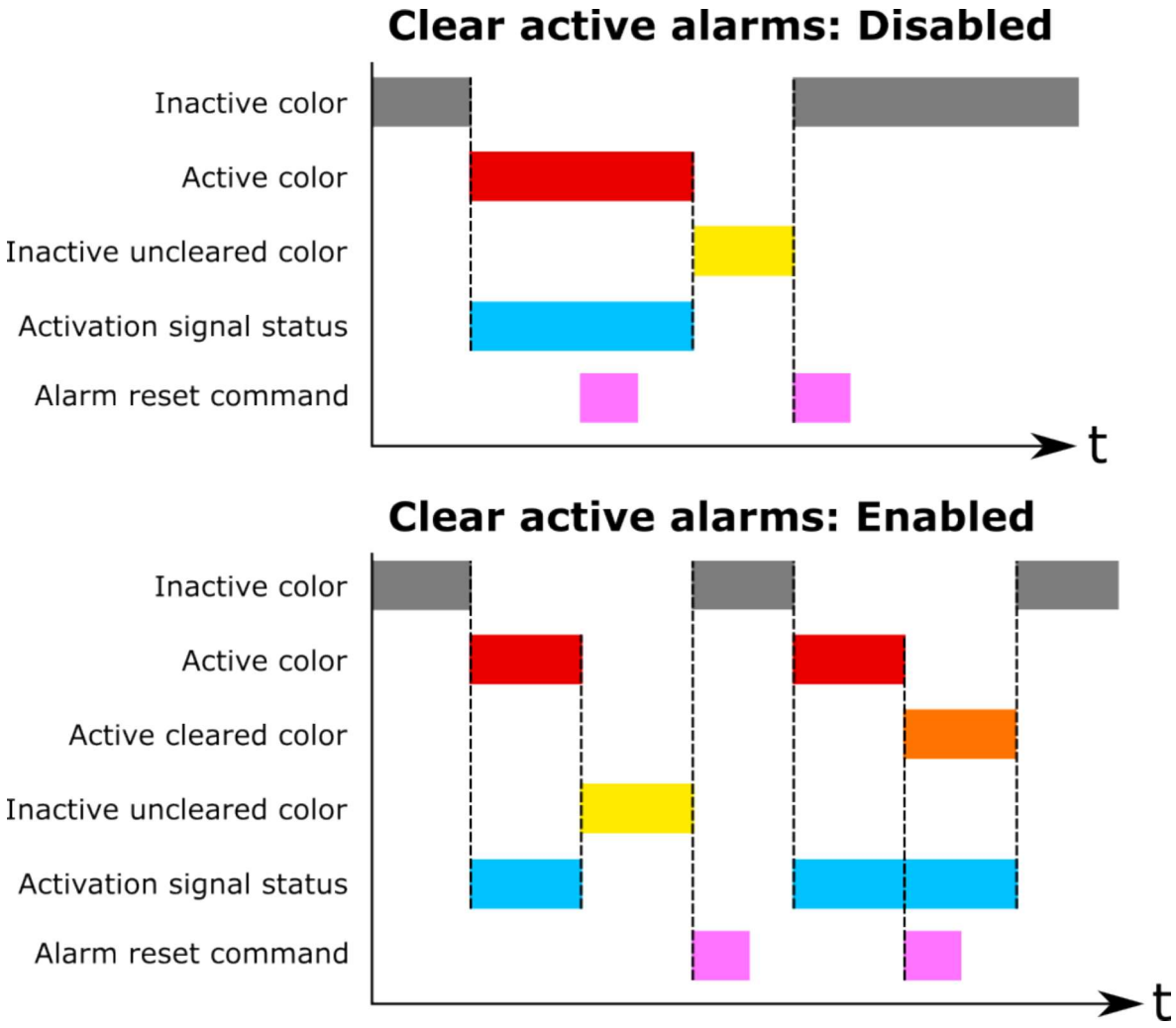

Alarm zooming

If *Zoom popup* parameter is enabled in *Carousel designer* menu it is possible to enlarge alarms by pressing the up-arrow button. Once in zoomed mode direction arrows up, down, left and right can be used for choosing the alarm. Use Back-button to exit zoomed mode.

© Arcteq Relays Ltd

Figure. 4.4 - 38. Alarm 1 is zoomed

Alarm 1 20/06/2022 12:32:05.842	m 2	Alarm 3	Alarm 4	Alarm 5	Alarm 6	Alarm 7	Alarm 8
	n 10	Alarm 11	Alarm 12	Alarm 13	Alarm 14	Alarm 15	Alarm 16
	n 18	Alarm 19	Alarm 20	Alarm 21	Alarm 22	Alarm 23	Alarm 24
Alarm 25	Alarm 26	Alarm 27	Alarm 28	Alarm 29	Alarm 30	Alarm 31	Alarm 32
Alarm 33	Alarm 34	Alarm 35	Alarm 36	Alarm 37	Alarm 38	Alarm 39	Alarm 40
Alarm 41	Alarm 42	Alarm 43	Alarm 44	Alarm 45	Alarm 46	Alarm 47	Alarm 48
Alarm 49	Alarm 50	Alarm 51	Alarm 52	Alarm 53	Alarm 54	Alarm 55	Alarm 56
Alarm 57	Alarm 58	Alarm 59	Alarm 60	Alarm 61	Alarm 62	Alarm 63	Alarm 64
Alarm 65	Alarm 66	Alarm 67	Alarm 68	Alarm 69	Alarm 70	Alarm 71	Alarm 72
Alarm 73	Alarm 74	Alarm 75	Alarm 76	Alarm 77	Alarm 78	Alarm 79	Alarm 80
Alarm 81	Alarm 82	Alarm 83	Alarm 84	Alarm 85	Alarm 86	Alarm 87	Alarm 88
Alarm 89	Alarm 90	Alarm 91	Alarm 92	Alarm 93	Alarm 94	Alarm 95	Alarm 96
Alarm 97	Alarm 98	Alarm 99	Alarm 100	Alarm 101	Alarm 102	Alarm 103	Alarm 104
Alarm 105	Alarm 106	Alarm 107	Alarm 108	Alarm 109	Alarm 110	Alarm 111	Alarm 112
Alarm 113	Alarm 114	Alarm 115	Alarm 116	Alarm 117	Alarm 118	Alarm 119	Alarm 120
Alarm 121	Alarm 122	Alarm 123	Alarm 124	Alarm 125	Alarm 126	Alarm 127	Alarm 128

Clearing activated alarms

Figure. 4.4 - 39. Setting up the button for clearing alarms.

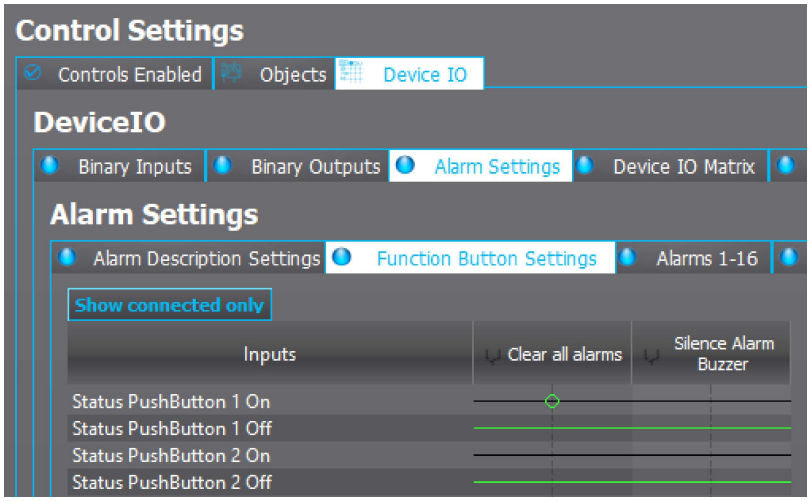

The button used for clearing alarms is defined in *Control → Device I/O → Alarm settings → Function Button Settings*. Please notice that the function button mode should be set to PRESS RELEASE mode in *Control → Device I/O → User-button settings*.

Buzzer activation and deactivation

The device doesn't have an integrated buzzer. However, if an alarming buzzer is needed it is possible to connect an external buzzer. It is activated by one of the output relays of the device. The user can set up the buzzer control by connecting the ALARM BUZZER signal to an output (*Control → Device I/O → Device IO Matrix*). Whenever an alarm is activated the ALARM BUZZER signal will also activate and the output contact can be controlled.

The user can silence the alarm buzzer by connecting a digital input or some other binary signal in the logic to SILENCE ALARM BUZZER in the logic.

Figure. 4.4 - 40. Silence alarm buzzer logic connection.

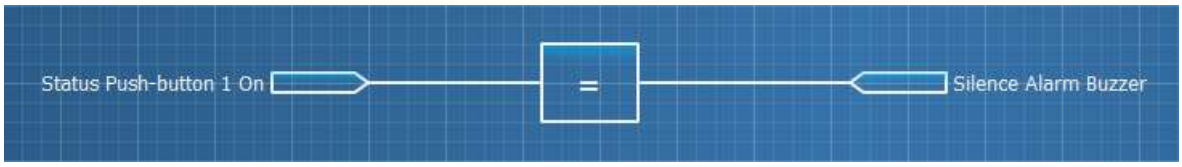

Clearing latched alarms

Figure. 4.4 - 41. Latched signals as dots.

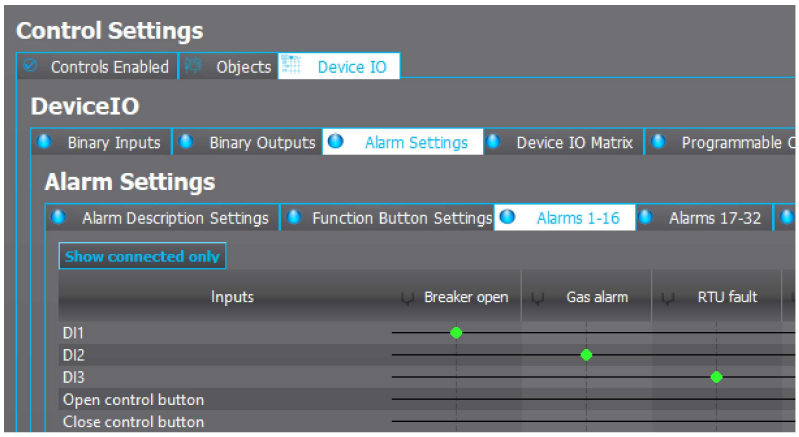

Latched signals are represented by filled markers in the matrix.

If a latched signals is connected to an alarm, the alarm unit requires the user to push the **Back** button in the unit's front panel before the latched signal can be cleared. Using latched signals is generally not advised in order to keep alarm clearing simple.

Events

The alarm function generates events from the status changes in the monitored signals. The user can select which event messages are stored in the main event buffer: ON, OFF, or both.

Table. 4.4 - 89. Event messages.

Event block name	Event name
ALARM1	Alarm 1...32 ON/OFF
ALARM2	Alarm 33...64 ON/OFF
ALARM3	Alarm 65...96 ON/OFF
ALARM4	Alarm 97...128 ON/OFF

© Arcteq Relays Ltd

4.5 Protection functions

4.5.1 General properties of a protection function

The following flowchart describes the basic structure of any protection function. The basic structure is composed of analog measurement values being compared to the pick-up values and operating time delay characteristics.

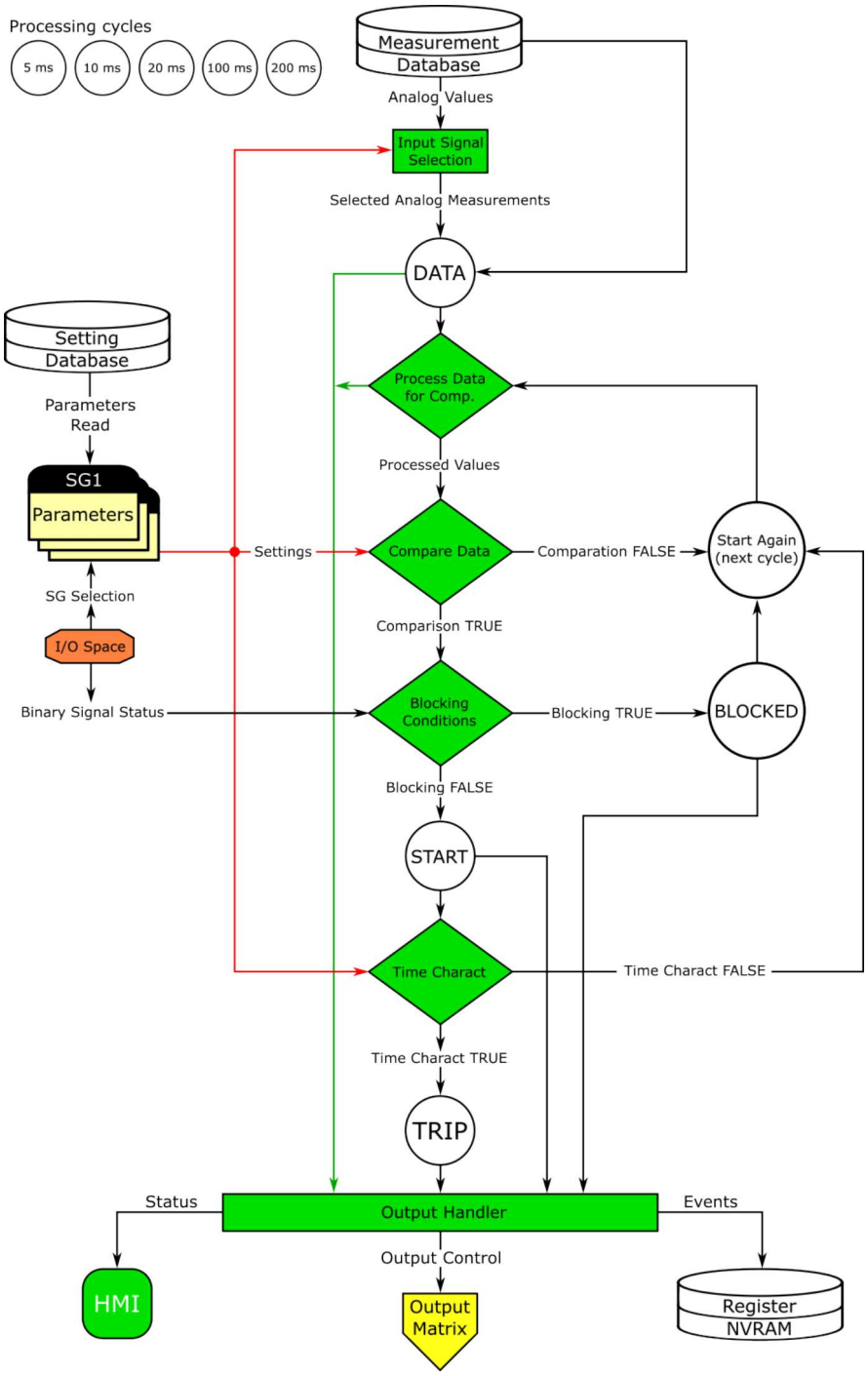

The protection function is run in a completely digital environment with a protection CPU microprocessor which also processes the analog signals transformed into the digital form.

In the following chapters the common functionalities of protection functions are described. If a protection function deviates from this basic structure, the difference is described in the corresponding chapter of the manual.

Pick-up

The X_{set} parameter defines the pick-up level of the function, and this in turn defines the maximum or minimum allowed measured magnitude (in per unit, absolute or percentage value) before the function takes action. The function constantly calculates the ratio between the pick-up parameter set by the user and the measured magnitude (X_m). The reset ratio of 97 % is built into the function and is always relative to the X_{set} value. If a function's pick-up characteristics vary from this description, they are defined in the function section in the manual.

Figure. 4.5.1 - 42. Pick up and reset.

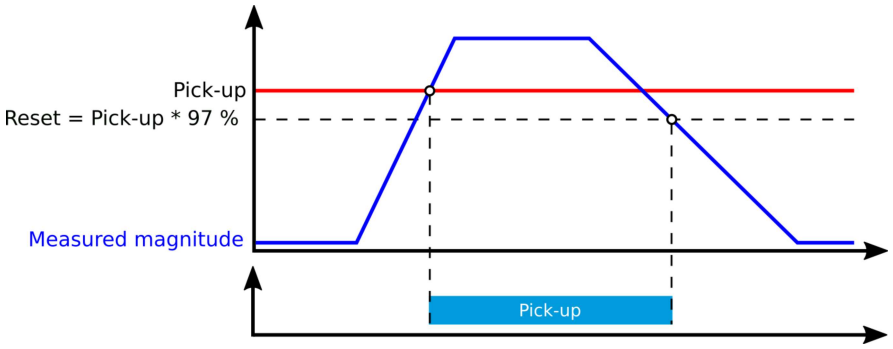

Figure. 4.5.1 - 43. Measurement range in relation to the nominal current.

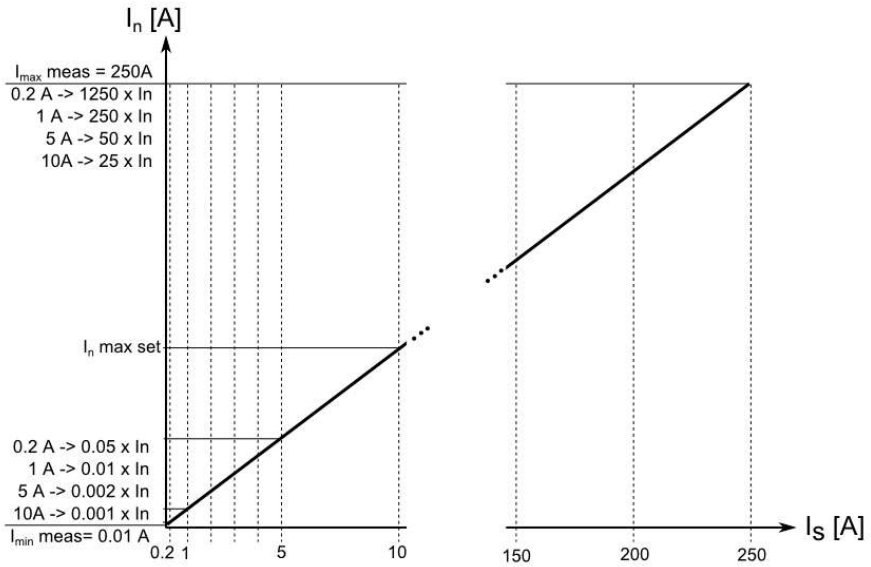

The I_n magnitude refers to the user set nominal current which can range from 0.2…10 A, typically 0.2 A, 1A or 5 A. With its own current measurement card, the device will measure secondary currents from 0.001 A up to 250 A. To this relation the pick-up setting in secondary amperes will vary.

Function blocking

The blocking signal is evaluated at the start of each program cycle. The blocking signals are connected to the function's dedicated input, which can be configured in the *IO → Blocking Input Control* tab of the function.

© Arcteq Relays Ltd
IM00099

- When the pick-up element activates and the blocking signal is not active, a START signal is generated, and the function starts or continues with the trip time countdown.
- When the pick-up element activates and the blocking signal is active, a BLOCKED signal is generated, and the function does not process the event further.
- When a START signal is already active and the blocking input signal becomes active, the START signal is reset and BLOCKED signal is generated. The release time characteristics are then processed in the same way as when the pick-up signal is reset.

The blocking signal needs to reach the device minimum of 5 ms before the set operating delay has passed in order for the blocking to activate in time. Blocking of the function causes a time stamped blocking event with information of the startup current values and its fault type to be issued.

Some functions also offer an optional internal inrush harmonic blocking feature. If the inrush harmonic pick-up is active at the same time as the protection function pick-up element, the trip delay timer continues counting down as normal. Once the countdown reaches zero, if the pick-up element remains active and the second harmonic value has dropped, the function issues a trip.

Table. 4.5.1 - 90. Internal inrush harmonic blocking settings.

Name	Range	Step	Default	Description
Inrush harmonic blocking (internal-only trip)	• No • Yes	-	• No	Enables and disables the 2nd harmonic blocking.
2nd harmonic blocking limit (Iharm/Ifund)	0.10…50.00%I_{fund}	0.01%I_{fund}	0.01%I_{fund}	Defines the limit of the 2nd harmonic blocking.

Operating time characteristics

Three basic modes are available for delaying function operation:

- Instant operation: activates the trip signal simultaneously with the start signal with no additional time delay.
- Definite time operation (DT): activates the trip signal after a user-defined time delay regardless of themagnitude of the measured value(s) as long as the pick-up element is active.
- Inverse definite minimum time (IDMT): activates the trip signal after a time which is in relation to the set pick-up value and the measured value.

Both IEC and IEEE/ANSI standard characteristics as well as user settable parameters are available for the IDMT operation. Please note that in the IDMT mode *Definite (minimum)operating time delay* also determines the minimum time for protection tripping (see the figure below). If this function is not desired the parameter should be set to 0 seconds.

Figure. 4.5.1 - 44. Operating time delay: *Definite (minimum) operating time delay* and the minimum for tripping.

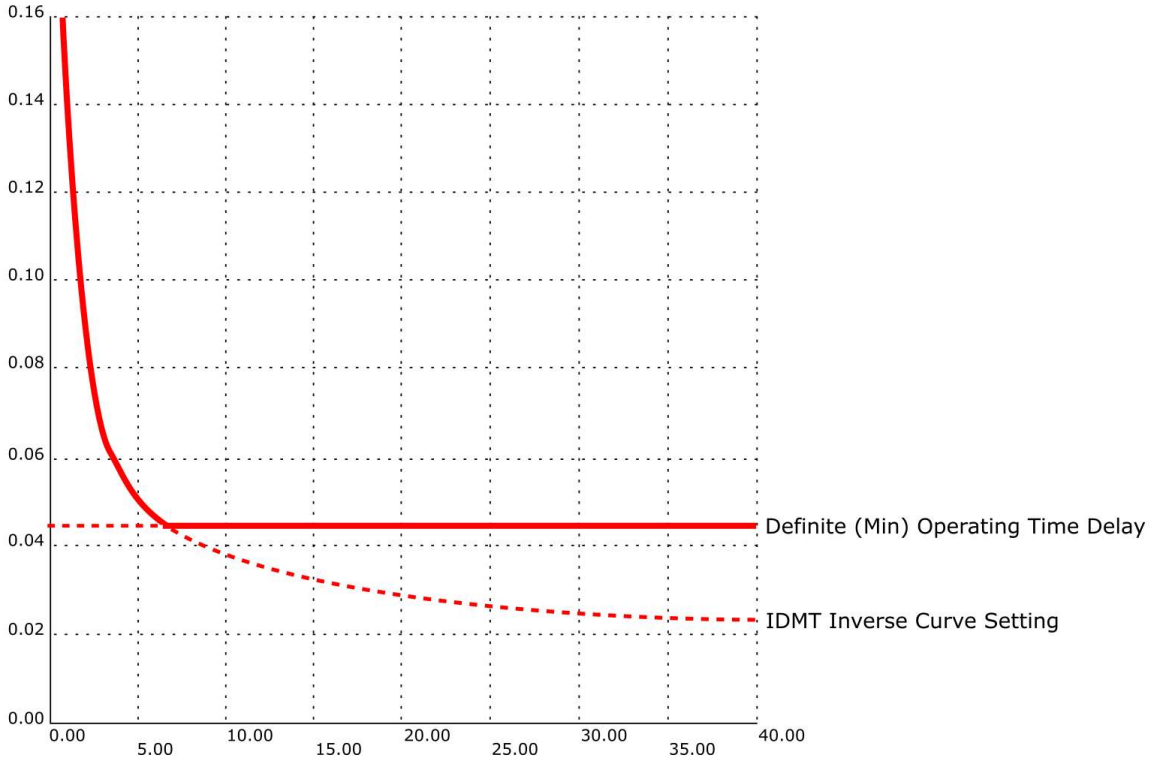

Table. 4.5.1 - 91. Operating time characteristics setting parameters (general).

Name	Range	Step	Default	Description
Delay type	• DT • IDMT	-	DT	Selects the delay type for the time counter. The selection is made between "Inverse definite minimum time" (IDMT) and "Definite time operation" (DT) characteristics.
Definite (minimum) operating time delay	0.000…1800.000s	0.005s	0.040s	When the "Delay type" parameter is set to "DT", this parameter acts as the expected operating time for the protection function. When set to 0 s, the stage operates instantaneously without any additional delay. When the parameter is set to 0.005...1800 s, the stage operates as independent delayed. When the "Delay type" parameter has been set to "IDMT", this parameter can be used to determine the minimum operating time for the protection function. Example of this is presented in the figure above.
Delay curve series	• IEC • IEEE	-	IEC	Selects whether the delay curve series for an IDMT operation follows either IEC or IEEE/ANSI standard defined characteristics. This setting is active and visible when the "Delay type" parameter is set to "IDMT".

© Arcteq Relays Ltd

Name	Range	Step	Default	Description
Delay characteristics IEC	• NI • EI • VI • LTI • Param	-	NI	Selects the IEC standard delay characteristics. The options include the following: Normally Inverse ("NI"), Extremely Inverse ("EI"), Very Inverse ("VI") and Long Time Inverse ("LTI") characteristics. Additionally, the "Param" option allows the tuning of the constants A and B which then allows the setting of characteristics following the same formula as the IEC curves mentioned here. This setting is active and visible when the "Delay type" parameter is set to "IDMT" and the "Delay curve series" parameter is set to "IEC".
Delay characteristics IEEE	• ANSI NI • ANSI VI • ANSI EI • ANSI LTI • IEEE MI • IEEE VI • IEEE EI • Param	-	ANSI NI	Selects the IEEE and ANSI standard delay characteristics. The options for ANSI include the following: Normal Inverse ("ANSI NI"), Very Inverse ("ANSI VI"), Extremely inverse ("ANSI EI"), Long time inverse ("ANSI LTI") characteristics. IEEE: Moderately Inverse ("IEEE MI"), Very Inverse ("IEEE VI"), Extremely Inverse ("IEEE EI") characteristics. Additionally, the "Param" option allows the tuning of the constants A, B and C which then allows the setting of characteristics following the same formula as the IEEE curves mentioned here. This setting is active and visible when the "Delay type" parameter is set to "IDMT" and the "Delay curve series" parameter is set to "IEEE".
Time dial setting k	0.01…25.00s	0.01s	0.05s	Defines the time dial/multiplier setting for IDMT characteristics. This setting is active and visible when the "Delay type" parameter is set to "IDMT".
A	0.0000…250.0000	0.0001	0.0860	Defines the Constant A for IEC/IEEE characteristics. This setting is active and visible when the "Delay type" parameter is set to "IDMT" and the "Delay characteristic" parameter is set to "Param".
B	0.0000…250.0000	0.0001	0.1850	Defines the Constant B for IEC/IEEE characteristics. This setting is active and visible when the "Delay type" parameter is set to "IDMT" and the "Delay characteristic" parameter is set to "Param".
C	0.0000…250.0000	0.0001	0.0200	Defines the Constant C for IEEE characteristics. This setting is active and visible when the "Delay type" parameter is set to "IDMT" and the "Delay characteristic" parameter is set to "Param".

Figure. 4.5.1 - 45. Inverse definite minimum time formulas for IEC and IEEE standards.

<table>
<tr><th>IEC</th><th>IEEE/ANSI</th></tr>
<tr><td>$t = \frac{kA}{\left(\frac{I_m}{I_{set}}\right)^B - 1}$</td><td>$t = k\left(\frac{A}{\left(\frac{I_m}{I_{set}}\right)^C - 1} + B\right)$</td></tr>
<tr><td>t = Operating delay (s)
k = Time dial setting
I_m = Measured maximum current
I_{set} = Pick-up setting
A = Operating characteristics constant
B = Operating characteristics constant</td><td>t = Operating delay (s)
k = Time dial setting
I_m = Measured maximum current
I_{set} = Pick-up setting
A = Operating characteristics constant
B = Operating characteristics constant
C = Operating characteristics constant</td></tr>
<tr><td>Standard delays IEC constants
<table>
<tr><th>Type</th><th>A</th><th>B</th></tr>
<tr><td>Normally Inverse (NI)</td><td>0,14</td><td>0,02</td></tr>
<tr><td>Extremely Inverse (EI)</td><td>80</td><td>2</td></tr>
<tr><td>Very Inverse (VI)</td><td>13,5</td><td>1</td></tr>
<tr><td>Long Time Inverse (LTI)</td><td>120</td><td>1</td></tr>
</table></td><td>Standard delays ANSI constants
<table>
<tr><th>Type</th><th>A</th><th>B</th><th>C</th></tr>
<tr><td>Normally Inverse (NI)</td><td>8,934</td><td>0,1797</td><td>2,094</td></tr>
<tr><td>Very Inverse (VI)</td><td>3,922</td><td>0,0982</td><td>2</td></tr>
<tr><td>Extremely Inverse (EI)</td><td>5,64</td><td>0,02434</td><td>2</td></tr>
<tr><td>Long Time Inverse (LTI)</td><td>5,614</td><td>2,186</td><td>1</td></tr>
</table>
Standard delays IEEE constants
<table>
<tr><th>Type</th><th>A</th><th>B</th><th>C</th></tr>
<tr><td>Moderately Inverse (MI)</td><td>0,0515</td><td>0,114</td><td>0,02</td></tr>
<tr><td>Very Inverse (VI)</td><td>19,61</td><td>0,491</td><td>2</td></tr>
<tr><td>Extremely Inverse (EI)</td><td>28,2</td><td>0,1217</td><td>2</td></tr>
</table></td></tr>
</table>

Non-standard delay characteristics

In addition to the previously mentioned delay characteristics, some functions also have delay characteristics that deviate from the IEC or IEEE standards. These functions are the following:

- non-directional overcurrent stages
- non-directional earth fault stages
- directional overcurrent stages
- directional earth fault stages.

The setting parameters and their ranges are documented in the chapters of the respective function blocks.

Table. 4.5.1 - 92. Inverse definite minimum time formulas for nonstandard characteristics.

RI-type	RD-type
Used for getting the time grading with mechanical relays.	Mostly used in earth fault protection which grants selective tripping even in non-directional protection.
$t = \frac{k}{0.339 - 0.236 * \frac{I_{set}}{I_m}}$	$t = 5.8 - 1.35 * \ln\left(\frac{I_m}{k * I_{set}}\right)$
t = Operation delay (s) k = Time dial setting I_m = Measured maximum current I_{set} = Pick-up setting	t = Operation delay (s) k = Time dial setting I_m = Measured maximum current I_{set} = Pick-up setting

© Arcteq Relays Ltd

NOTICE!
When using RD-type and "k" has been set lower than 0.3 calculated operation time can be lower than 0 seconds with some measurement values. In these cases operation time will be instant.

When using the release delay option where the operating time counter is calculating the operating time during the release time, the function will not trip if the input signal is not activated again during the release time counting.

The behavior of the stages with different release time configurations are presented in the figures below.

Table. 4.5.1 - 93. Setting parameters for reset time characteristics.

Name	Range	Step	Default	Description
Delayed pick-up release	• No • Yes	-	Yes	Resetting characteristics selection (either time-delayed or instant) after the pick-up element is released. If set to "Yes", the START signal is reset after a set release time delay.
Release time delay	0.000…150.000s	0.005s	0.06s	Resetting time. The time allowed between pick-ups if the pick-up has not led into a trip operation. If the "Delayed pick-up release" setting is set to "Yes", the START signal is held on for the duration of the timer.
Op.Time calculation reset after release time	• No • Yes	-	Yes	Operating timer resetting characteristics selection. When set to "Yes", the operating time counter is reset after a set release time if the pick-up element is not activated during this time. When set to "No", the operating time counter is reset directly after the pick-up element is reset.
Continue time calculation during release time	• No • Yes	-	No	Time calculation characteristics selection. If set to "Yes", the operating time counter continues until a set release time even if the pick-up element is reset.

Figure. 4.5.1 - 46. No delayed pick-up release.

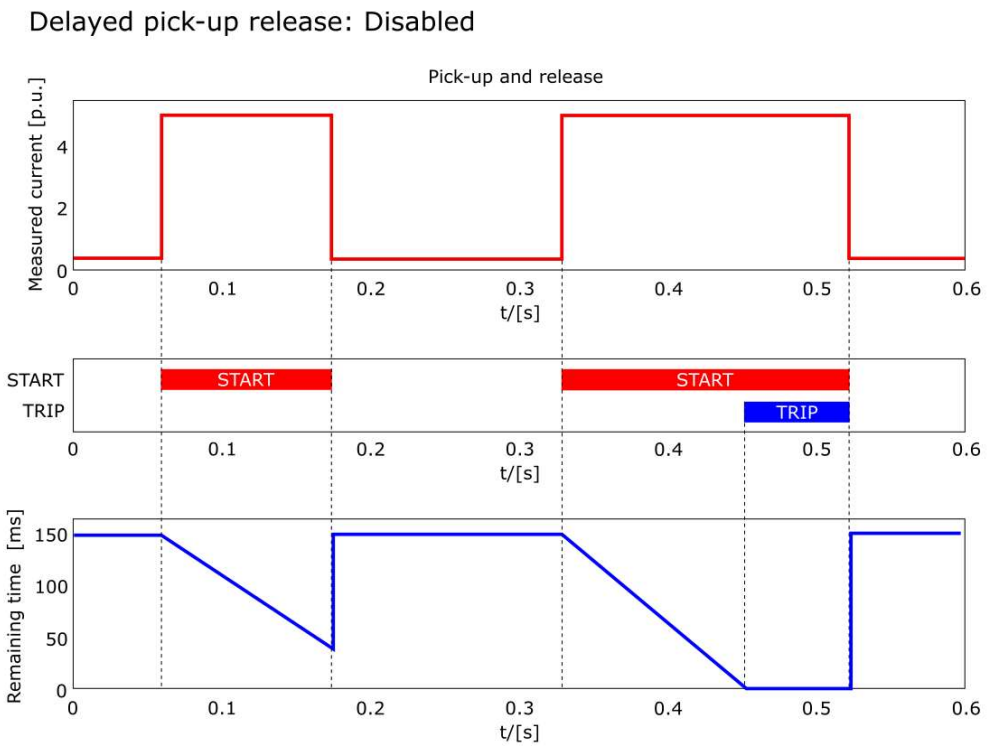

Figure. 4.5.1 - 47. Delayed pick-up release, delay counter is reset at signal drop-off.

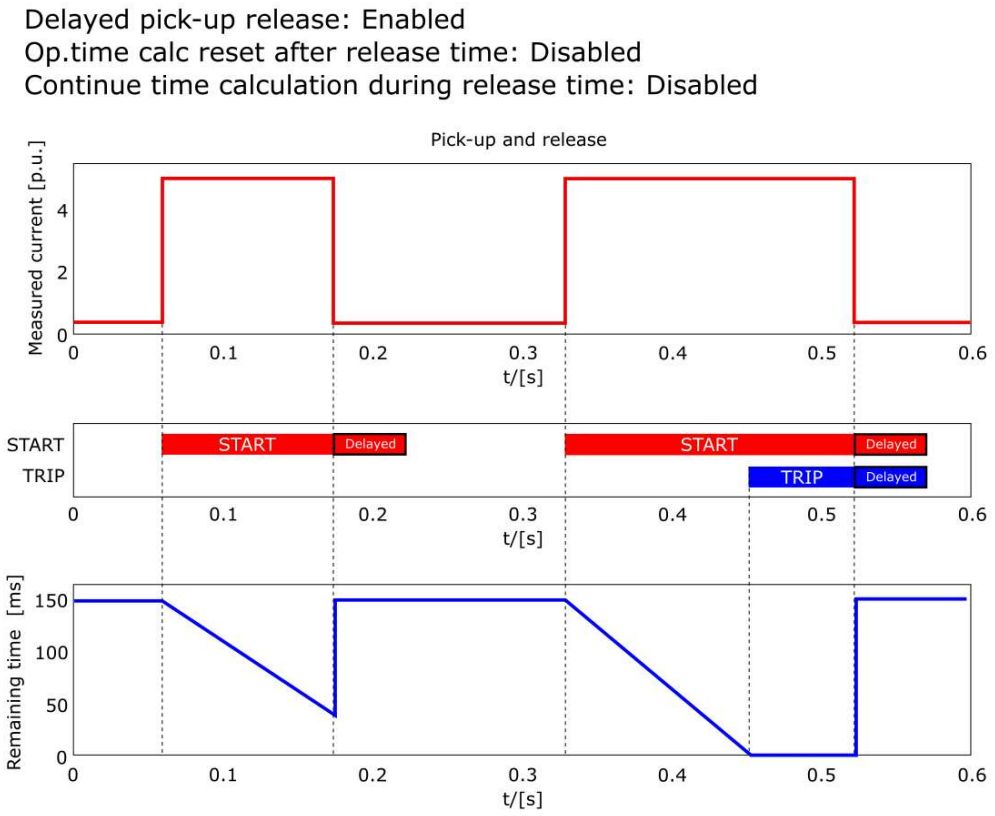

© Arcteq Relays Ltd

Figure. 4.5.1 - 48. Delayed pick-up release, delay counter value is held during the release time.

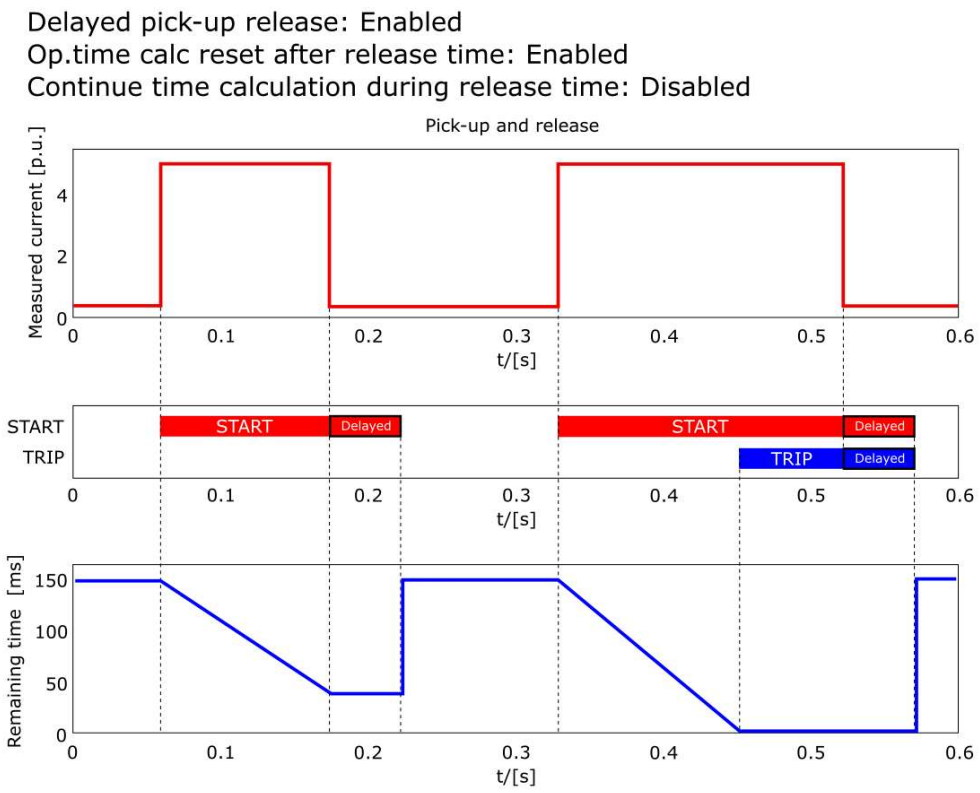

Figure. 4.5.1 - 49. Delayed pick-up release, delay counter value is decreasing during the release time.

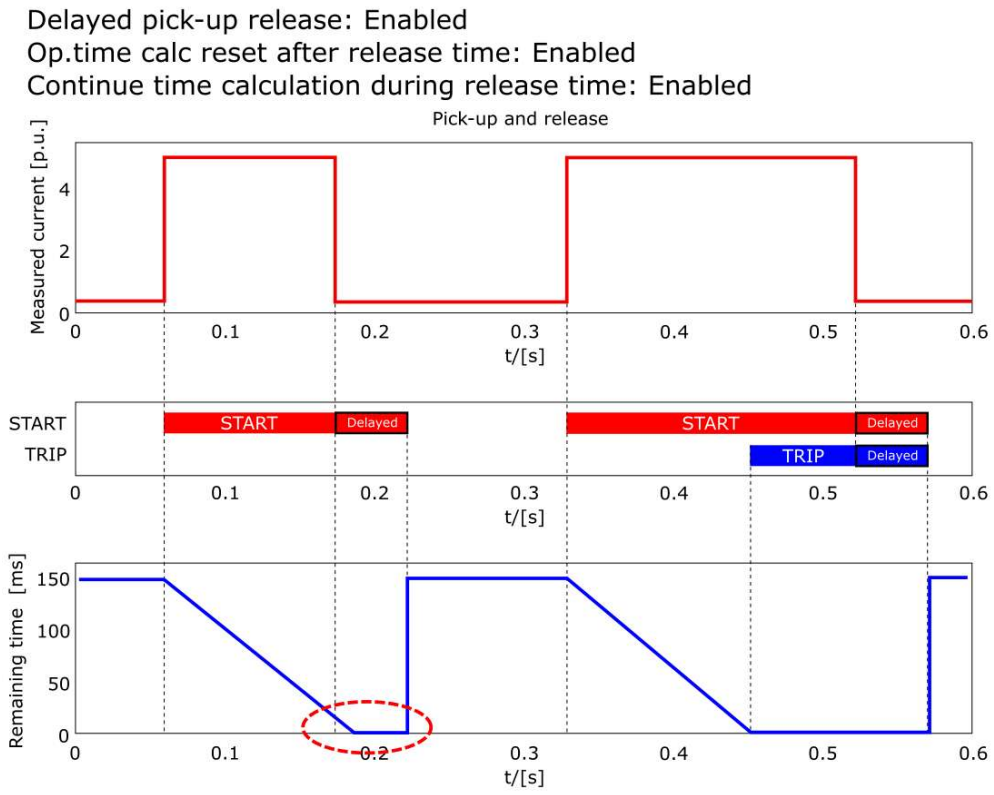

Stage forcing

It is possible to test the logic, event processing and the operation of the device's logic by controlling the state of the protection functions manually without injecting any current into the device with stage forcing. To enable *Stage forcing* set the *Enable stage forcing* to ENABLED in the *General* menu. After this it is possible to control the status of a protection function (Normal, Start, Trip, Blocked etc.) in the *Info* page of the function.

NOTICE!
When *Stage forcing* is enabled protection functions will also change state through user input. Injected currents/voltages also affect the behavior of the device. Regardless, it is recommended to disable *Stage Forcing* after testing has ended.

4.5.2 Line protection module general settings

Table. 4.5.2 - 94. Line protection status

Name	Range	Default	Description
LPM mode	• Activated • Disabled	Disabled	Displays whether the Line Protection Module (LPM) is currently active or disabled. The LPM is automatically activated when the "This IED role is" parameter is set to either "Master node" or "Sub node". If the parameter is set to "Disabled", the LPM will be deactivated automatically.
This IED role is	• Master node • Sub node • Disabled	Disabled	Specifies whether the device operates as a Master Node or a Sub Node within the system. For proper functionality of the Line Protection Module (LPM), one device must be configured as the Master Node, and another as the Sub Node.

© Arcteq Relays Ltd

Name	Range	Default	Description
Master node status	• Master node • System Running • Protection Operational • System rebooting • Configuring, Id> suspended • Biased diff blocked • Instant diff blocked • Phase A harm blk. • Phase B harm blk. • Phase C harm blk. • LineDiff Enabled • LineDiff Halted • Bias Trip • Instant Trip • Remote1 halted • Communication Ok • Communication fail • Object1 Open • Object1 Closed • Obj1 Open Cmd. • Obj1 Close Cmd. • Sub sampling f control	—	Displays the status of the master node.
Local/ Remote node 1 status			Displays the status of remote/local node.

Master trip

Line differential trip signal is multiplied internally in between of the line ends relays. Master trip signals allow the transmission of extra trip commands to the remote end. In case if Line breaker control is in use, also breaker open and close request signals are internally connected so in that case remote breaker commands should not be connected here.

Table. 4.5.2 - 95. Master trip signals

Name	Description
LDIF1 Process Bus Master Trip Send	Define signals which send a master trip signal to the other node.
LDIF1 Process Bus Master Trip Receive	Define the action when master trip signal is received from the other device. Can be used for activating an output relay, logical output or a user LED.

Fast VT supervision

Fast VT supervision is used for blocking distance protection from operating when the measured voltage is too low or there is no voltage at all. Fast VT supervision has an internal connection to the distance protection function.

Table. 4.5.2 - 96. Fast VT supervision settings and indications.

Name	Range	Step	Default	Description
Fast VT supervision	• Disabled • Activated	-	Disabled	Enables fast VT supervision.
Fast VT supervision operation	• 3PH • Phase-wise	-	3PH	In three-phase mode (3PH) if the measured voltage of any phase goes below the set low voltage limit, all three phases are blocked. In Phase-wise mode only the channel with low voltage is blocked.
Fast VT detection mode	• 2nd Max • Max	-	2nd Max	
Fast VT supervision status	• Not blocking • Blocking On	-	-	Displays the general status of blocking.
Fast VT supervision status L1	• Not blocking • Blocking On	-	-	Displays the blocking status of phase L1.
Fast VT supervision status L2	• Not blocking • Blocking On	-	-	Displays the blocking status of phase L2.
Fast VT supervision status L3	• Not blocking • Blocking On	-	-	Displays the blocking status of phase L3.
Fast VT supervision low voltage limit (Ulow)	0.05…0.30 xUn	0.01 xUn	0.10 xUn	If the measured voltage goes below this set value, fast VT blocking is activated.
Fast VT supervision low sensitivity factor (xULow)	1.10…2.00 xULow	0.05 xULow	1.50 xULow	Hysteresis for low voltage blocking. Please note that this value is in relation to the low voltage limit (Ulow) setting. If low voltage limit has been set to 0.10 xUn, and the sensitivity factor is set to 1.50 xULow, the blocking will reset when all voltages are above 0.10 xUn * 1.50 = 0.15 xUn.
Fast VT supervision current high limit	0.6…5.00 xIn	0.10 xIn	0.30 xIn	Used to avoid blocking in case of bolted fault. Should be set to a higher value than normal load current and lower than the lowest possible short circuit fault current.

© Arcteq Relays Ltd

Fast CT supervision (Line differential protection)

Fast current transformer supervision monitors the condition of both local and remote current transformers. If asymmetric current or overload is detected the line differential protection is blocked to prevent incorrect operation. The sensitivity factors define the minimum and maximum current band in which the current sudden drops do not activate CT supervision. All three monitored current must be above this limit. If one or two phases drop below this limit CT supervision pre-starts and if current drops below absolute xIn no current limit, CT supervision activates. Sensitivity factors are not absolute xIn values, instead they are percentage values of three phase current average xIn values. So the operation is combination of relative pick-up monitoring band and absolute low current setting which defines that the measured current is non existent.

Table. 4.5.2 - 97. Fast CT supervision settings and indications.

Name	Range	Step	Default	Description
Fast CT supervision	• Disabled • Activated	-	Disabled	Disables and activates Fast CT supervision.
Fast CT supervision status	• Disabled • Active • Active, Master controlled • Inactive, Problem	-	-	Displays the status of the Fast CT supervision.
Local CT supervision	• CT symmetric Ok • CT A fail active • CT B fail active • CT C fail active • Multi phase low Ok • Multi phase OC • Low measured current	-	-	Displays the status of local device CT supervision.
Remote CT supervision	• Remote Ok • CT failing Blocking	-	-	Displays the status of remote device CT supervision.
Fast CT supervision no load limit	0.01…0.50 xIn	0.01 xIn	0.50 xIn	When measured current is under this value, it is considered de-energized.
Fast CT supervision low sensitivity factor	1.00…99.00 %	0.01 %	90.00 %	Minimum allowed relative current for current detection band where sudden current change does not cause activation of CT supervision.

Name	Range	Step	Default	Description
Fast CT supervision high sensitivity factor	101.00 %	0.01 %	101.00 %	Maximum allowed relative current for current change detection band. If measured current is above this limit in any of the three phases, CT supervision is blocked from operating since the condition refers to overcurrent situation.

Load supervision (Line differential protection)

This function prevents the line differential protection from tripping during significant load variations that do not indicate a fault. The function should be enabled in case the load frequently changes.

Table. 4.5.2 - 98. Load supervision

Name	Range	Default	Description
Load condition supervision	• Disabled • Activated	Disabled	Enables load condition supervision.
Load supervision status	• Disabled • Active • Active, Master controlled • Inactive, Problem	-	Displays load supervision status.

Line breaker control (Line differential protection)

Breaker control mode determines whether only the local breaker or both the local and remote breakers are operated from either end of the line. Trip is always operated simultaneously in both ends of the protected line.

Table. 4.5.2 - 99. Breaker control mode settings

Name	Range	Default	Description
Breaker control mode	• Only local • Local and Remote	Only local	Enables or disables remote controlling of the breaker.

CB control blocked (Line differential protection)

Table. 4.5.2 - 100. Circuit breaker control blocking signals

Name	Description
LDIF1 Open Control Blocked Send	If open control has been blocked, it can be sent with this point to the other end of the line.
LDIF1 Close Control Blocked Send	If close control has been blocked, it can be sent with this point to the other end of the line.
LDIF1 Open Control Blocked Receive	If open control has been blocked at the other end of the line, the signal can be received with this point.

© Arcteq Relays Ltd

Name	Description
LDIF1 Close Control Blocked Receive	If close control has been blocked at the other end of the line, the signal can be received with this point.

Protected objects in line when device is set as "sub node". (Line differential protection)

Name	Range	Description
Operating mode	Following master settings	The device will use the configuration that has been set in the master node.

Process bus page

Table. 4.5.2 - 101. Process bus settings.

Name	Range	Default	Description
Advanced settings	• - • Show	-	Enables advanced settings. In normal applications it is not recommended to use advanced process bus settings.
This IED role is	• Master node • Sub node • Disabled	Master node	Defines whether the device is a master or if it is a sub node. One of the devices must be a master node and one must be a sub node.

Process Bus User signals

Name	Description
User Logic Send input 1 bit 1...32	Send logic signals to the other node
User Logic Send input 2 bit 1...32	Send logic signals to the other node
User Logic Received input 1 bit 1...32	Receive logic signals from the other node
User Logic Received input 2 bit 1...32	Receive logic signals from the other node

I/O page

Table. 4.5.2 - 102. Direct output control signals.

Name	Description
Fast CT supervision	Fast CT supervision fault active
Fast VT supervision	General Fast VT supervision fault active (phase L1, L2 or L3)
Fast VT supervision L1	Fast VT supervision fault phase L1

Name	Description
Fast VT supervision L2	Fast VT supervision fault phase L2
Fast VT supervision L3	Fast VT supervision fault phase L3
Load change supervision	Load change detected
PVPS Line comm ok	Communication between the master and the sub node is healthy.
PVPS Line comm failure	Communication between the master and the sub node is not healthy.
PVPS Any line protection failure	General failure in line protection communication, is always activated in case if synchronization is lost, remote end protection not responding or communication is completely lost in between of the units.
PVPS Units synchronization Ok	Measurement data signal is ok.
PVPS Synchronization lost	Measurement data signal synchronization lost. Line differential function operation is blocked.

Event messages of the LPM

Table. 4.5.2 - 103. Event messages of the LPM function.

Event block name	Description
LPM	Fast CT supervision On/Off
LPM	Load change supervision On/Off
LPM	Line communication ok On/Off
LPM	Line communication failure On/Off
LPM	Any prot. communication failure On/Off
LPM	Line differential clocks synchronized On/Off
LPM	Line differential clock synchronization lost On/Off
LPM	Fast VT supervision L1 On/Off
LPM	Fast VT supervision L2 On/Off
LPM	Fast VT supervision L3 On/Off

© Arcteq Relays Ltd

4.5.2.1 Line protection module general settings

Table. 4.5.2.1 - 104. Line protection status

Name	Range	Default	Description
LPM mode	• Activated • Disabled	Disabled	Displays whether the Line Protection Module (LPM) is currently active or disabled. The LPM is automatically activated when the "This IED role is" parameter is set to either "Master node" or "Sub node". If the parameter is set to "Disabled", the LPM will be deactivated automatically.
This IED role is	• Master node • Sub node • Disabled	Disabled	Specifies whether the device operates as a Master Node or a Sub Node within the system. For proper functionality of the Line Protection Module (LPM), one device must be configured as the Master Node, and another as the Sub Node.
Master node status	• Master node • System Running • Protection Operational • System rebooting • Configuring, Id> suspended • Biased diff blocked • Instant diff blocked • Phase A harm blk. • Phase B harm blk. • Phase C harm blk. • LineDiff Enabled • LineDiff Halted • Bias Trip • Instant Trip • Remote1 halted • Communication Ok • Communication fail • Object1 Open • Object1 Closed • Obj1 Open Cmd. • Obj1 Close Cmd. • Sub sampling f control	—	Displays the status of the master node.
Local/ Remote node 1 status			Displays the status of remote/local node.

Master trip

Line differential trip signal is multiplied internally in between of the line ends relays. Master trip signals allow the transmission of extra trip commands to the remote end. In case if Line breaker control is in use, also breaker open and close request signals are internally connected so in that case remote breaker commands should not be connected here.

Table. 4.5.2.1 - 105. Master trip signals

Name	Description
LDIF1 Process Bus Master Trip Send	Define signals which send a master trip signal to the other node.
LDIF1 Process Bus Master Trip Receive	Define the action when master trip signal is received from the other device. Can be used for activating an output relay, logical output or a user LED.

Fast VT supervision

Fast VT supervision is used for blocking distance protection from operating when the measured voltage is too low or there is no voltage at all. Fast VT supervision has an internal connection to the distance protection function.

Table. 4.5.2.1 - 106. Fast VT supervision settings and indications.

Name	Range	Step	Default	Description
Fast VT supervision	• Disabled • Activated	-	Disabled	Enables fast VT supervision.
Fast VT supervision operation	• 3PH • Phase-wise	-	3PH	In three-phase mode (3PH) if the measured voltage of any phase goes below the set low voltage limit, all three phases are blocked. In Phase-wise mode only the channel with low voltage is blocked.
Fast VT detection mode	• 2nd Max • Max	-	2nd Max	
Fast VT supervision status	• Not blocking • Blocking On	-	-	Displays the general status of blocking.
Fast VT supervision status L1	• Not blocking • Blocking On	-	-	Displays the blocking status of phase L1.
Fast VT supervision status L2	• Not blocking • Blocking On	-	-	Displays the blocking status of phase L2.
Fast VT supervision status L3	• Not blocking • Blocking On	-	-	Displays the blocking status of phase L3.
Fast VT supervision low voltage limit (Ulow)	0.05…0.30 xUn	0.01 xUn	0.10 xUn	If the measured voltage goes below this set value, fast VT blocking is activated.

© Arcteq Relays Ltd

Name	Range	Step	Default	Description
Fast VT supervision low sensitivity factor (xULow)	1.10…2.00 xULow	0.05 xULow	1.50 xULow	Hysteresis for low voltage blocking. Please note that this value is in relation to the low voltage limit (Ulow) setting. If low voltage limit has been set to 0.10 xUn, and the sensitivity factor is set to 1.50 xULow, the blocking will reset when all voltages are above 0.10 xUn * 1.50 = 0.15 xUn.
Fast VT supervision current high limit	0.6…5.00 xIn	0.10 xIn	0.30 xIn	Used to avoid blocking in case of bolted fault. Should be set to a higher value than normal load current and lower than the lowest possible short circuit fault current.

Fast CT supervision (Line differential protection)

Fast current transformer supervision monitors the condition of both local and remote current transformers. If asymmetric current or overload is detected the line differential protection is blocked to prevent incorrect operation. The sensitivity factors define the minimum and maximum current band in which the current sudden drops do not activate CT supervision. All three monitored current must be above this limit. If one or two phases drop below this limit CT supervision pre-starts and if current drops below absolute xIn no current limit, CT supervision activates. Sensitivity factors are not absolute xIn values, instead they are percentage values of three phase current average xIn values. So the operation is combination of relative pick-up monitoring band and absolute low current setting which defines that the measured current is non existent.

Table. 4.5.2.1 - 107. Fast CT supervision settings and indications.

Name	Range	Step	Default	Description
Fast CT supervision	• Disabled • Activated	-	Disabled	Disables and activates Fast CT supervision.
Fast CT supervision status	• Disabled • Active • Active, Master controlled • Inactive, Problem	-	-	Displays the status of the Fast CT supervision.
Local CT supervision	• CT symmetric Ok • CT A fail active • CT B fail active • CT C fail active • Multi phase low Ok • Multi phase OC • Low measured current	-	-	Displays the status of local device CT supervision.

Name	Range	Step	Default	Description
Remote CT supervision	• Remote Ok • CT failing Blocking	-	-	Displays the status of remote device CT supervision.
Fast CT supervision no load limit	0.01…0.50 xIn	0.01 xIn	0.50 xIn	When measured current is under this value, it is considered de-energized.
Fast CT supervision low sensitivity factor	1.00…99.00 %	0.01 %	90.00 %	Minimum allowed relative current for current detection band where sudden current change does not cause activation of CT supervision.
Fast CT supervision high sensitivity factor	101.00 %	0.01 %	101.00 %	Maximum allowed relative current for current change detection band. If measured current is above this limit in any of the three phases, CT supervision is blocked from operating since the condition refers to overcurrent situation.

Load supervision (Line differential protection)

This function prevents the line differential protection from tripping during significant load variations that do not indicate a fault. The function should be enabled in case the load frequently changes.

Table. 4.5.2.1 - 108. Load supervision

Name	Range	Default	Description
Load condition supervision	• Disabled • Activated	Disabled	Enables load condition supervision.
Load supervision status	• Disabled • Active • Active, Master controlled • Inactive, Problem	-	Displays load supervision status.

Line breaker control (Line differential protection)

Breaker control mode determines whether only the local breaker or both the local and remote breakers are operated from either end of the line. Trip is always operated simultaneously in both ends of the protected line.

Table. 4.5.2.1 - 109. Breaker control mode settings

Name	Range	Default	Description
Breaker control mode	• Only local • Local and Remote	Only local	Enables or disables remote controlling of the breaker.

© Arcteq Relays Ltd
IM00099

CB control blocked (Line differential protection)

Table. 4.5.2.1 - 110. Circuit breaker control blocking signals

Name	Description
LDIF1 Open Control Blocked Send	If open control has been blocked, it can be sent with this point to the other end of the line.
LDIF1 Close Control Blocked Send	If close control has been blocked, it can be sent with this point to the other end of the line.
LDIF1 Open Control Blocked Receive	If open control has been blocked at the other end of the line, the signal can be received with this point.
LDIF1 Close Control Blocked Receive	If close control has been blocked at the other end of the line, the signal can be received with this point.

Protected objects in line when device is set as "sub node". (Line differential protection)

Name	Range	Description
Operating mode	Following master settings	The device will use the configuration that has been set in the master node.

Process bus page

Table. 4.5.2.1 - 111. Process bus settings.

Name	Range	Default	Description
Advanced settings	• - • Show	-	Enables advanced settings. In normal applications it is not recommended to use advanced process bus settings.
This IED role is	• Master node • Sub node • Disabled	Master node	Defines whether the device is a master or if it is a sub node. One of the devices must be a master node and one must be a sub node.

Process Bus User signals

Name	Description
User Logic Send input 1 bit 1...32	Send logic signals to the other node
User Logic Send input 2 bit 1...32	Send logic signals to the other node
User Logic Received input 1 bit 1...32	Receive logic signals from the other node
User Logic Received input 2 bit 1...32	Receive logic signals from the other node

I/O page

Table. 4.5.2.1 - 112. Direct output control signals.

Name	Description
Fast CT supervision	Fast CT supervision fault active
Fast VT supervision	General Fast VT supervision fault active (phase L1, L2 or L3)
Fast VT supervision L1	Fast VT supervision fault phase L1
Fast VT supervision L2	Fast VT supervision fault phase L2
Fast VT supervision L3	Fast VT supervision fault phase L3
Load change supervision	Load change detected
PVPS Line comm ok	Communication between the master and the sub node is healthy.
PVPS Line comm failure	Communication between the master and the sub node is not healthy.
PVPS Any line protection failure	General failure in line protection communication, is always activated in case if synchronization is lost, remote end protection not responding or communication is completely lost in between of the units.
PVPS Units synchronization Ok	Measurement data signal is ok.
PVPS Synchronization lost	Measurement data signal synchronization lost. Line differential function operation is blocked.

Event messages of the LPM

Table. 4.5.2.1 - 113. Event messages of the LPM function.

Event block name	Description
LPM	Fast CT supervision On/Off
LPM	Load change supervision On/Off
LPM	Line communication ok On/Off
LPM	Line communication failure On/Off
LPM	Any prot. communication failure On/Off
LPM	Line differential clocks synchronized On/Off

© Arcteq Relays Ltd

Event block name	Description
LPM	Line differential clock synchronization lost On/Off
LPM	Fast VT supervision L1 On/Off
LPM	Fast VT supervision L2 On/Off
LPM	Fast VT supervision L3 On/Off

4.5.2.2 Protected line settings

Protected objects in line settings

This section allows input of transformer information when a transformer is located within the protected line section. This selection significantly changes the differential calculation algorithm and the operation changes to transformer differential instead of pure line differential application. Protection settings should be considered then accordingly to transformer protection which are significantly less sensitive than with only line protection. In case if the transformer in line output MVA is very high, transformer secondary should be applied with separate instant short circuit relay in order to guarantee necessary sensitivity and fault clearing time for the line in between the transformer and receiving station.

Table. 4.5.2.2 - 114. Protected objects in line parameters when the device is set as "master node".

Name	Range	Step	Default	Description
Enable configuration	• Disabled • Enabled (Halt protection)	-	Disabled	When this parameter is enabled, configuring the line differential protection is allowed and the protection function is halted.
Transformer in protected line	• No, only line • Yes, trafo in line	-	No, only line	If there is a transformer in the protected area (between the two measurement points), this parameter must be set to "Yes, trafo in line".
Master side nominal current (pri)	0.01…50 000.00 A	0.01 A	-	Nominal current of the master node.
Sub side nominal current (pri)	0.01…50 000.00 A	0.01 A	-	Nominal current of the sub node.
"Transformer in protected line" is set to "Yes, trafo in line"				
HV side located with	• Master node • Sub node	-	Master node	Defines if the master node or the sub node side is the HV side. This parameter is displayed if "Transformer in protected line" has been set to "Yes, trafo in line".
Transformer nominal MVA	0.001…800.000 MVA	0.001 MVA	1 MVA	This parameter is displayed if "Transformer in protected line" has been set to "Yes, trafo in line". The nominal MVA of the transformer. This value is used to calculate the nominal currents onf both the HV and the LV side.

Name	Range	Step	Default	Description
HV side nominal voltage	0.10…750.00 kV		110	This parameter is displayed if "Transformer in protected line" has been set to "Yes, trafo in line". The HV side nominal voltage of the transformer. This value is used to calculate the nominal currents of the HV side.
LV side nominal voltage	0.10…750.00 kV	0.01 kV	20	This parameter is displayed if "Transformer in protected line" has been set to "Yes, trafo in line". The LV side nominal voltage of the transformer. This value is used to calculate the nominal currents of the LV side.
Transf. Vect. group	• Yy0 • Yyn0 • YNy0 • YNyn0 • Yy6 • Yyn6 • YNy6 • YNyn6 • Yd1 • YNd1 • Yd7 • YNd7 • Yd11 • YNd11 • Yd5 • YNd5 • Dy1 • Dyn1 • Dy7 • Dyn7 • Dy11 • Dyn11 • Dy5 • Dyn5 • Dd0 • Dd6	-	Yy0	This parameter is displayed if "Transformer in protected line" has been set to "Yes, trafo in line". The selection of the transformer's vector group. The selection values are predefined so that the scaling and vector matching are applied in the protection device automatically when the correct vector group is selected.

Forward line settings

Protected line settings are in center of the distance application setup. The distance zone characteristics are dependent of the line settings. The protected line can consist of 1 to 5 segments.

The line parameters can be input by R/X -values, Z/Ang -values or as (R/X) / km kilometer values. The relay calculates the electrical length of the line automatically when the parameters are set.

Table. 4.5.2.2 - 115. "Positive Sequence Line Settings" in "Forward Line Settings" section.

Name	Range	Step	Default	Description
Forward Line segmenting settings	• Equal Segments (Line and Ground) • Separate Segments (Line and Ground)	-	Equal Segments (Line and Ground)	Read only value. Fixed to "Equal segments (Line and Ground).
Forward Line Segments	1…5 Segments	1	1	Defines the number of line segments in use.

© Arcteq Relays Ltd

Name	Range	Step	Default	Description
Forward Segment values in	• R/X • Z/Angle • (R/X) / km	-	R/X	Defines the input method of the seqment values
Fwd. Line seg. Length	0.001…10000 km	0.001 km	1 km	Defines the line segment in km.
Segment values has been set to R/X				
Fwd. Line seg. Pos.Seq. Resistance (RL+)	0.01…10000 ohm	0.001 ohm	1 ohm	Defines the line positive sequence resistance in ohm.
Fwd. Line seg. Pos.Seq. Reactance (XL+)	0.01…10000 ohm	0.001 ohm	1 ohm	Defines the line positive sequence reactance in ohms.
Segment values has been set to (R/X) / km				
Fwd. Line seg. Pos.Seq. Resistance (RL+) / km	0.01…10000 ohm/ km	0.001 ohm/ km	1 ohm/km	Defines the line positive sequence resistance in ohms/ km.
Fwd. Line seg. Pos.Seq. Reactance (XL+) / km	0.01…10000 ohm/ km	0.001 ohm/ km	1 ohm/km	Defines the line positive sequence reactance in ohms/ km.
Segment values has been set to Z / Angle				
Fwd. Line seg. Pos.Seq. Impedance (ZL+)	0.01…10000 ohm	0.001 ohm	1 ohm	Defines the line positive sequence impedance in ohms.
Fwd. Line seg. Pos. seq. Impedance Angle	0.01…360	0.001	1	Defines the line positive sequence impedance angle in degrees.

Table. 4.5.2.2 - 116. "Zero Sequence Line Settings" in "Forward Line Settings" section.

Name	Range	Step	Default	Description
Forward Segment Zero Seq.	• k0 • Line Z0 values • Estimate	-	k0	Defines the format the zero sequence compensation factor is calculated.
Forward Zero Seq. set to k0				
Forward k0 given in	• R/X • Z/Angle	-	R/X	If ”R/X” is used, the zero sequence compensation factor k0 value is given in real (”R”) and imaginary (”X”) parts. If ”Z/Angle” is used, the k0 value is given in magnitude (”Z”) and angle (”angle”) format.
Fwd. Line Zero.Seq. k0 R	0.000…10 000.000	0.001	1.000	Real part of k0 factor. This parameter is visible when "Forward k0 given in" has been set to "R/X".

Name	Range	Step	Default	Description
Fwd. Line Zero.Seq. k0 X	0.000…10 000.000	0.001	0.000	Imaginary part of k0 factor. This parameter is visible when "Forward k0 given in" has been set to "R/X".
Fwd. Line Zero.Seq. k0 Z	0.000…10 000.000 ohm	0.001 ohm	1.000 ohm	Magnitude of k0 factor. This parameter is visible when "Forward k0 given in" has been set to "Z/angle".
Fwd. Line Zero.Seq. k0 angle	0.000…360.000 deg	0.001 deg	0.000 deg	Angle of k0 factor. This parameter is visible when "Forward k0 given in" has been set to "Z/angle".
Forward Zero Seq. set to Line Z0 values				
Forward Zero Seq. values in	R/X Z/Angle (R/X)/km	-	R/X	If ”R/X” is used, the zero sequence compensation factor k0 value is calculated using the zero sequence resistance (”RL0”) and reactance (”XL0”) values. If ”Z/Angle” is used, the k0 value is calculated using the zero sequence impedance (”ZL0”) and its angle (”angle”). If ”(R/X)/km” is used, the k0 value is calculated using the zero sequence resistance (”RL0”) and reactance (”XL0”) ohm/km values.
Fwd. Line Zero.Seq. Resistance (RL0)	0.01…10000 ohm	0.001 ohm	1 ohm	Zero sequence resistance in ohms. Visible if *Forward Segment Zero Seq. values in* is *R/X*
Fwd. Line seg. Zero.Seq. Reactance (XL0)	0.01…10000 ohm	0.001 ohm	1 ohm	Zero sequence reactance in ohms. Visible if *Forward Segment Zero Seq. values in* is *R/X*
Fwd. Line seg. Zero.Seq. Resistance (RL0) / km	0.01…10000 ohm/ km	0.001 ohm/ km	1 ohm/ km	Zero sequence resistance in ohms/km. Visible if *Forward Segment Zero Seq. values in* is *(R/X) / km*
Fwd. Line seg. Zero.Seq. Reactance (XL0) / km	0.01…10000 ohm/ km	0.001 ohm/ km	1 ohm/ km	Zero sequence reactance in ohms/km. Visible if *Reverse Segment Zero Seq. values in* is *(R/X) / km*
Fwd. Line seg. Zero.Seq. Impedance (ZL0+)	0.01…10000 ohm	0.001 ohm	1 ohm	Zero sequence reactance in ohms/km. Visible if *Forward Segment Zero Seq. values in* is *Z / Angle*
Fwd. Line seg. Zero. seq. Impedance Angle	0.01…360	0.001	1	Zero sequence impedance in ohms/km. Visible if *Forward Segment Zero Seq. values in* is *Z / Angle*
Forward Zero Seq. set to Estimate				
Fwd. Line Zero. seq. Z estimated xZ+	0.000…10000.000 xZ+	0.001 xZ+	4.000 xZ+	Zero sequence impedance angle in degrees. Defines the estimated ratio between the zero sequence and positive sequence impedance.

© Arcteq Relays Ltd

Name	Range	Step	Default	Description
Read only parameters				
Fwd. Line k0 factor R set	-10 000.000…10 000.000	0.001	-	Displays the real part of the calculated k0 factor.
Fwd. Line k0 factor X set	-10 000.000…10 000.000	0.001	-	Displays the imaginary part of the calculated k0 factor.
Fwd. Line k0 factor Z set	-10 000.000…10 000.000 ohm	0.001 ohm	-	Displays the magnitude of the calculated k0 factor.
Fwd. Line k0 factor Angle set	-360.000…360.000 deg	0.001 deg	-	Displays the angle of the calculated k0 factor.

Reverse line settings

Table. 4.5.2.2 - 117. "Positive Sequence Line Settings" in "Reverse Line Settings" section.

Name	Range	Step	Default	Description
Reverse Line segmenting settings	• Equal Segments (Line and Ground) • Separate Segments (Line and Ground)	-	Equal Segments (Line and Ground)	Read only value. Fixed to "Equal segments (Line and Ground).
All Reverse Line Segments	1…5 Segments	-	1 Segment	Defines the number of line segments in use.
Reverse Segment values in	• R/X • Z/Angle • (R/X) / km	-	R/X	Defines the input method of the seqment values
Rev. Line seg. Length	0.001…10000 km	0.001 km	1 km	Defines the segment length in km.
Segment values has been set to R/X				
Rev. Line seg. Pos.Seq. Resistance (RL+)	0.01…10000 ohm	0.001 ohm	1 ohm	Defines the line positive sequence resistance in ohms.
Rev. Line seg. Pos.Seq. Reactance (XL+)	0.01…10000 ohm	0.001 ohm	1 ohm	Defines the line positive sequence reactance in ohms.
Segment values has been set to (R/X) / km				
Rev. Line seg. Pos.Seq. Resistance (RL+) / km	0.01…10000 ohm/km	0.001 ohm/km	1 ohm/km	Defines the line positive sequence resistance in ohms/km.
Rev. Line seg. Pos.Seq. Reactance (XL+) / km	0.01…10000 ohm/km	0.001 ohm/km	1 ohm/km	Defines the line positive sequence reactance in ohms/km.

Name	Range	Step	Default	Description
Segment values has been set to Z / Angle				
Rev. Line seg. Pos.Seq. Impedance (ZL+)	0.01…10000 ohm	0.001 ohm	1 ohm	Defines the line positive sequence impedance in ohms.
Rev. Line seg. Pos. seq. Impedance Angle	0.01…360	0.001	1	Defines the line positive sequence impedance angle in degrees.

Table. 4.5.2.2 - 118. "Zero Sequence Line Settings" in "Reverse Line Settings" section.

Name	Range	Step	Default	Description
Reverse Segment Zero Seq.	• k0 • Line Z0 values • Estimate	-	k0	Defines the format the zero sequence compensation factor is calculated.
Reverse Zero Seq. set to k0				
Reverse k0 given in	• R/X • Z/Angle	-	R/X	If ”R/X” is used, the zero sequence compensation factor k0 value is given in real (”R”) and imaginary (”X”) parts. If ”Z/Angle” is used, the k0 value is given in magnitude (”Z”) and angle (”angle”) format.
Rev. Line Zero.Seq. k0 R	0.000…10 000.000	0.001	1.000	Real part of k0 factor. Visible if *Reverse seg. 1 k0 given in* is *R/X*.
Rev. Line Zero.Seq. k0 X	0.000…10 000.000	0.001	0.000	Imaginary part of k0 factor. Visible if *Reverse seg. 1 k0 given in* is *R/X*.
Rev. Line Zero.Seq. k0 Z	0.000…10 000.000 ohm	0.001 ohm	1.000 ohm	Magnitude of k0 factor. Visible if Reverse seg. 1 k0 given in is *Z/Angle*.
Rev. Line Zero.Seq. k0 angle	0.000…360.000 deg	0.001 deg	0.000 deg	Angle of k0 factor. Visible if Reverse seg. 1 k0 given in is *Z/Angle*.
Reverse Zero Seq. set to Line Z0 values				
Reverse Zero Seq. values in	R/X Z/Angle (R/X)/km	-	R/X	If ”R/X” is used, the zero sequence compensation factor k0 value is calculated using the zero sequence resistance (”RL0”) and reactance (”XL0”) values. If ”Z/Angle” is used, the k0 value is calculated using the zero sequence impedance (”ZL0”) and its angle (”angle”). If ”(R/X)/km” is used, the k0 value is calculated using the zero sequence resistance (”RL0”) and reactance (”XL0”) ohm/km values.
Rev. Line Zero.Seq. Resistance (RL0)	0.01…10000 ohm	0.001 ohm	1 ohm	Zero sequence resistance in ohms. Visible if *Forward Segment Zero Seq. values in* is *R/X*

© Arcteq Relays Ltd

Name	Range	Step	Default	Description
Rev. Line seg. Zero.Seq. Reactance (XL0)	0.01…10000 ohm	0.001 ohm	1 ohm	Zero sequence reactance in ohms. Visible if *Forward Segment Zero Seq. values in* is *R/X*
Rev. Line seg. Zero.Seq. Resistance (RL0) / km	0.01…10000 ohm/km	0.001 ohm/km	1 ohm/km	Zero sequence resistance in ohms/km. Visible if *Forward Segment Zero Seq. values in* is *(R/X) / km*
Rev. Line seg. Zero.Seq. Reactance (XL0) / km	0.01…10000 ohm/km	0.001 ohm/km	1 ohm/km	Zero sequence reactance in ohms/km. Visible if *Reverse Segment Zero Seq. values in* is *(R/X) / km*
Rev. Line seg. Zero.Seq. Impedance (ZL0)	0.01…10000 ohm	0.001 ohm	1 ohm	Defines the line zero sequence impedance in ohms. Visible if *Forward Segment Zero Seq. values in* is *Z / Angle*
Rev. Line seg. Zero. seq. Impedance Angle	0.01…360	0.001	1	Defines the line zero sequence impedance angle in degrees. Visible if *Forward Segment Zero Seq. values in* is *Z / Angle*
Reverse Zero Seq. set to Estimate				
Rev. Line Zero. seq. Z estimated xZ+	0.000…10000.000 xZ+	0.001 xZ+	4.000 xZ+	Defines the estimated ratio between the zero sequence and positive sequence impedance.
Read only values				
Rev. Line seg. 1 k0 factor R set	-10 000.000…10 000.000	0.001	-	Displays the real part of the calculated k0 factor.
Rev. Line k0 factor X set	-10 000.000…10 000.000	0.001	-	Displays the imaginary part of the calculated k0 factor.
Rev. Line k0 factor Z set	-10 000.000…10 000.000 ohm	0.001	-	Displays the magnitude of the calculated k0 factor.
Rev. Line k0 factor Angle set	-360.000…360.000 deg	0.001 deg	-	Displays the angle of the calculated k0 factor.

Line settings verified

Table. 4.5.2.2 - 119. "Forward Line Settings" in "Line settings verified" section.

Name	Range	Step	Description
Set total line length forward	0.001…1800.000 km	0.001 km	Displays the total length of line in km.
Forward line segment 1…5 Resistance (R)	0.000…1800.000 ohm	0.001 ohm	Displays the resistance value at the end of respective segment in ohms.

Name	Range	Step	Description
Forward line segment 1…5 Reactance (X)	0.000…1800.000 ohm	0.001 ohm	Displays the reactance value at the end of respective segment in ohms.
Forward line segment 1…5 Length	0.000…1800.000 km	0.001 km	Displays the line length at the end of respective segment in km.

Table. 4.5.2.2 - 120. "Reverse Line Settings" in "Line settings verified" section.

Name	Range	Step	Description
Set total line length reverse	0.001…1800.000 km	0.001 km	Displays the total length of line in km.
Reverse line segment 1…5 Resistance (R)	0.000…1800.000 ohm	0.001 ohm	Displays the resistance value at the end of respective segment in ohms.
Reverse line segment 1…5 Reactance (X)	0.000…1800.000 ohm	0.001 ohm	Displays the reactance value at the end of respective segment in ohms.
Reverse line segment 1…5 Length	0.000…1800.000 km	0.001 km	Displays the line length at the end of respective segment in km.

4.5.2.3 Line differential protection (IdL>; 87L)

Line differential protection provides the primary protection for two-terminal transmission lines. Its principle of operation is based on Kirchhoff's Current Law, which states that the current entering a protection zone must equal the current leaving it under normal conditions. When the system operates normally, all power entering the line exits at the opposite end. If this balance is disturbed, it indicates a fault between the two measurement points, and the line must be de-energized immediately to prevent extensive damage.

The differential function determines this condition by calculating the difference between the incoming and outgoing currents. This calculation relies on synchronized Fourier fundamental harmonic components obtained from both ends of the line. Each device samples the phase currents locally and computes the harmonic components, which are then exchanged between the devices through communication channels to maintain synchronization.

The differential characteristic is designed as a biased characteristic with two breakpoints, which enhances stability during external faults and high load conditions by adjusting the tripping threshold according to the through-current magnitude. In addition to this, an unbiased overcurrent stage operates independently of the bias and responds solely to the calculated differential current, providing backup protection for severe internal faults.

Differential protection is highly sensitive and internally scaled to both the loading and fault currents flowing through the line. This ensures that unwanted outages are minimized while damage during fault conditions is significantly reduced.

Basic concepts for differential protection

The differential protection zone is defined as the area between the current transformers, commonly referred to as the differential zone. Within this zone, the fundamental principle is that the current entering from one side must equal the current leaving from the other side. If this condition is not met, it indicates a fault within the protected zone, which results in current being either blocked or retained inside the zone.

© Arcteq Relays Ltd

The direction of the CTs' Y legs on each side (master and sub) affect how the differential calculation method is set. The setting options are "add" and "subtract" which is why the CTs' current direction has to be taken into account. The "add" mode is used when the CT's starpoints are either pointing towards each other or away from each other. The "subtract" mode is used when those points are pointing in the same direction.

Figure. 4.5.2.3 - 50. Line differential application examples. Line differential can be applied also when there is a transformer between the two measuring points.

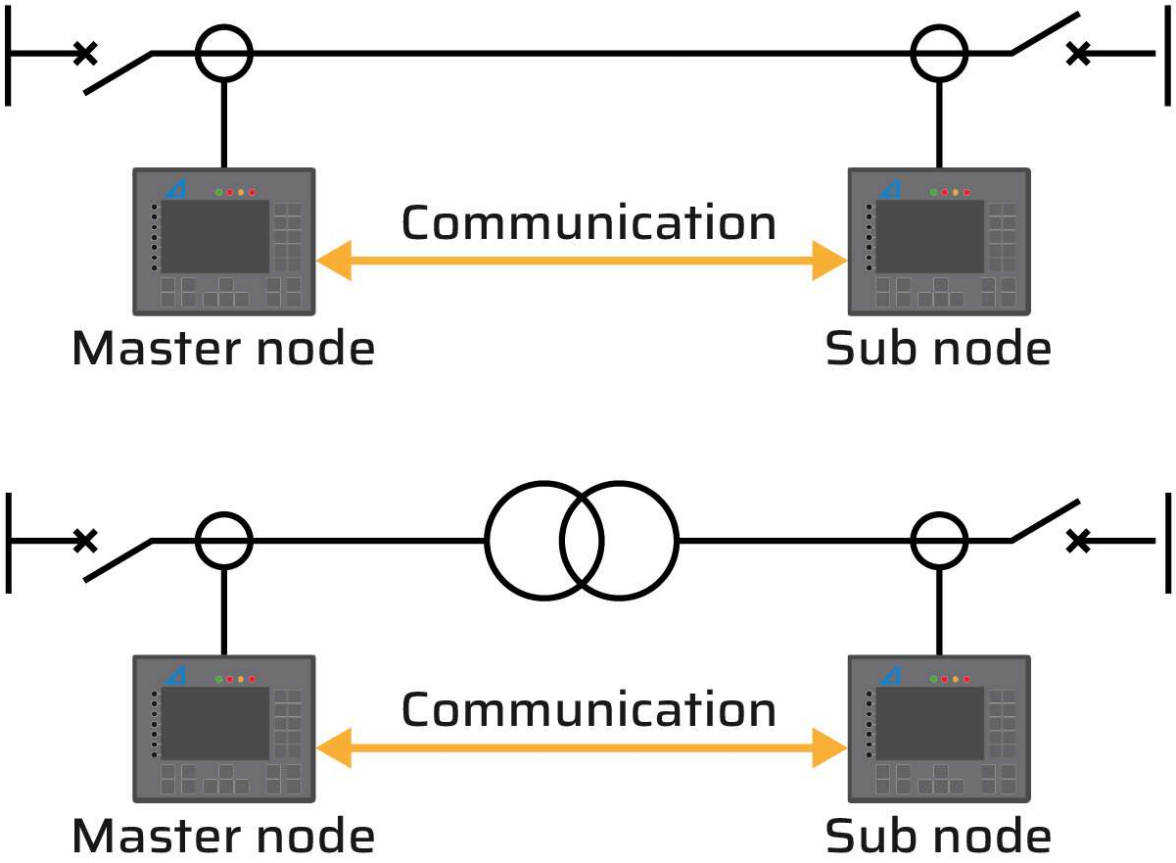

The images below present the differential algorithm itself (one calculating formula for each phase difference); first the "subtract" formulas, then the "add" formulas. Selection is based on the CT connections.

Figure. 4.5.2.3 - 51. "Subtract" formula.

$$L1DIFF_{Subt} = |\overline{IL1_{Master}} - \overline{IL1_{Sub}}|$$

$$L2DIFF_{Subt} = |\overline{IL2_{Master}} - \overline{IL2_{Sub}}|$$

$$L3DIFF_{Subt} = |\overline{IL3_{Master}} - \overline{IL3_{Sub}}|$$

Figure. 4.5.2.3 - 52. "Add" formula.

$$L1DIFF_{Add} = |\overline{IL1_{Master}} + \overline{IL1_{Sub}}|$$

$$L2DIFF_{Add} = |\overline{IL2_{Master}} + \overline{IL2_{Sub}}|$$

$$L3DIFF_{Add} = |\overline{IL3_{Master}} + \overline{IL3_{Sub}}|$$

© Arcteq Relays Ltd

Figure. 4.5.2.3 - 53. CTs' starpoints requiring the "Add" mode.

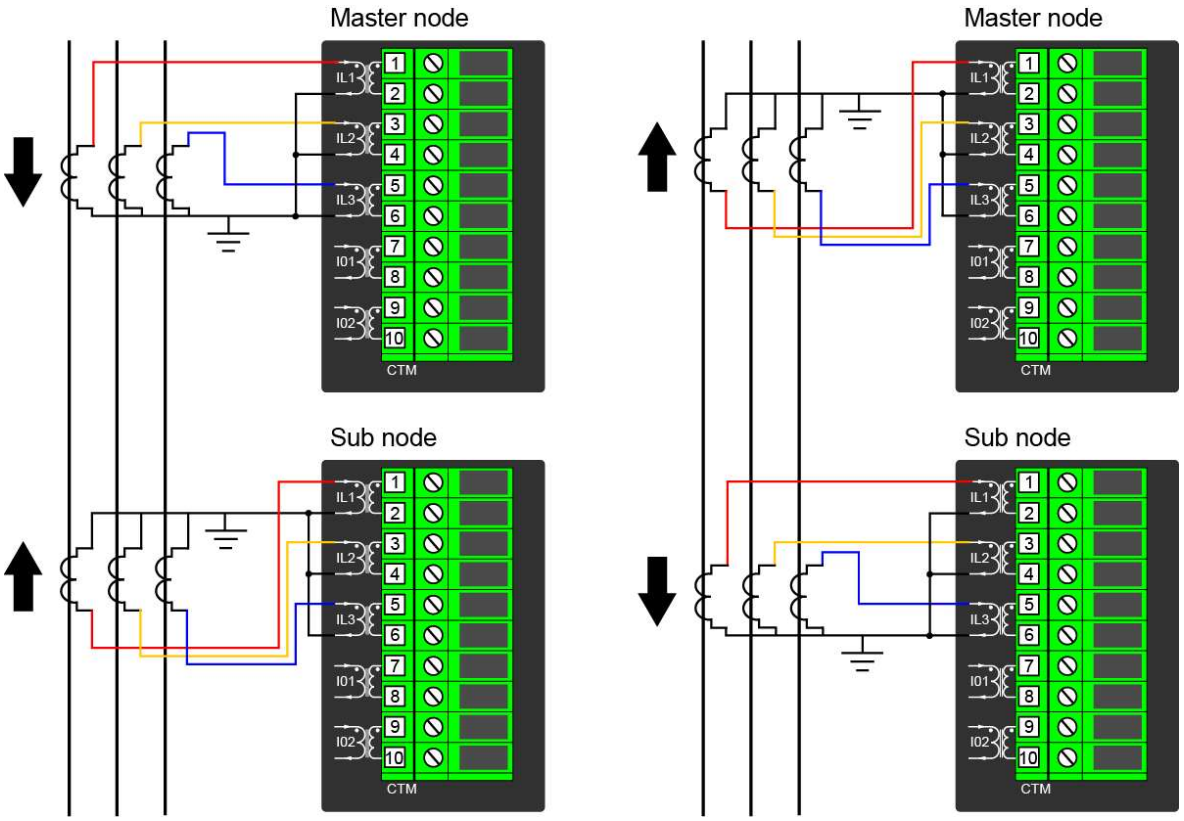

Figure. 4.5.2.3 - 54. CTs' starpoints requiring the "Subtract" mode.

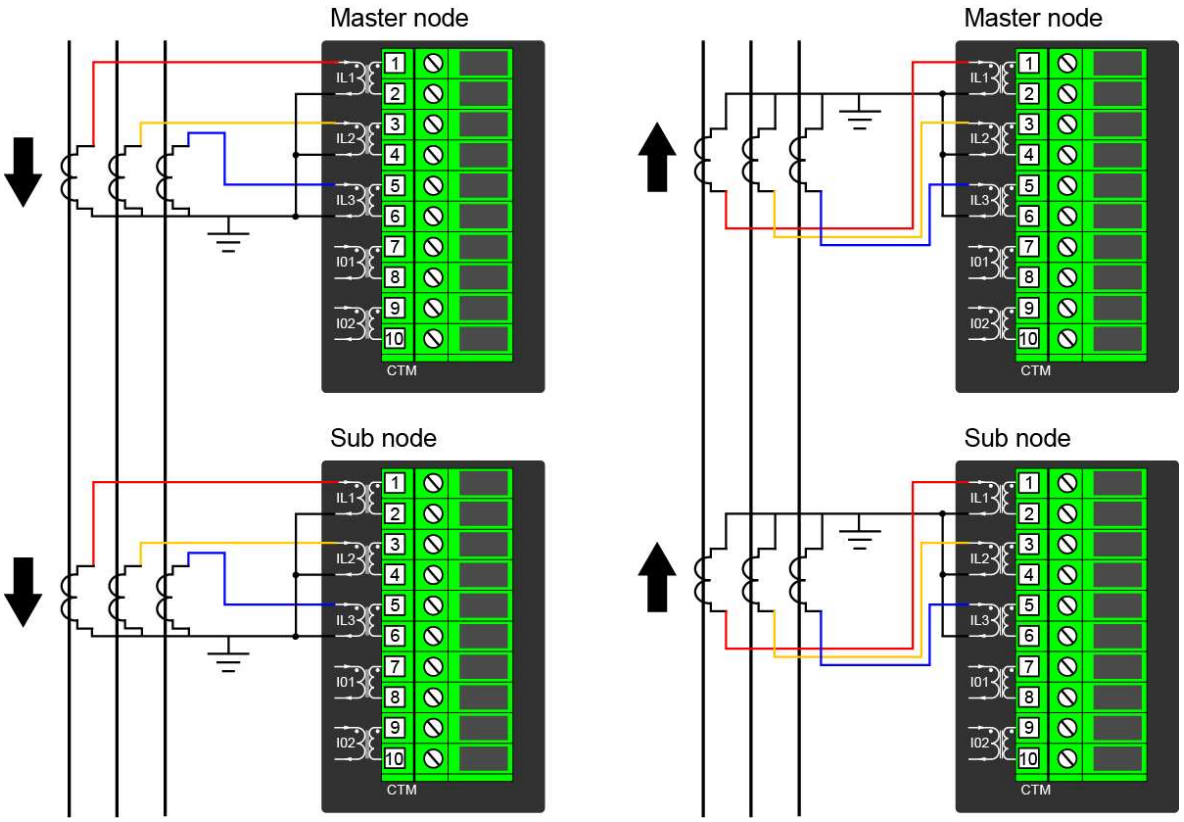

The differential protection function has two separate operating stages:

© Arcteq Relays Ltd

- Non-restraint stage: This stage utilizes only the above mentioned comparison formulas as its evaluation basis.
- Restraint stage: In this stage, a *bias calculation* is performed for each phase. The purpose of this calculation is to adapt the sensitivity of the differential element to the magnitude of the measured currents, which improves stability under varying load and fault conditions.

Bias calculation can be sensitive or coarse (see the following formulas).

Figure. 4.5.2.3 - 55. Average mode (sensitive biasing).

$$L1BIAS_{AVG} = \frac{|IL1_{Master}| + |IL1_{Sub}|}{2}$$

$$L2BIAS_{AVG} = \frac{|IL2_{Master}| + |IL2_{Sub}|}{2}$$

$$L3BIAS_{AVG} = \frac{|IL3_{Master}| + |IL3_{Sub}|}{2}$$

Figure. 4.5.2.3 - 56. Max mode (coarse biasing).

$$L1BIAS_{MAX} = \max\left(|\mathrm{IL1_{Master}}|, |\mathrm{IL1_{Sub}}|\right)$$

$$L2BIAS_{MAX} = \max\left(|\mathrm{IL2_{Master}}|, |\mathrm{IL2_{Sub}}|\right)$$

$$L3BIAS_{MAX} = \max\left(|\mathrm{IL3_{Master}}|, |\mathrm{IL3_{Sub}}|\right)$$

Next, these two formulas are combined in a graph: the x-axis presents the measured differential current, and the y-axis presents the calculated bias current. The following graph shows the differential function characteristic, both biased and non-biased.

Figure. 4.5.2.3 - 57. Differential function characteristic, biased and non-biased.

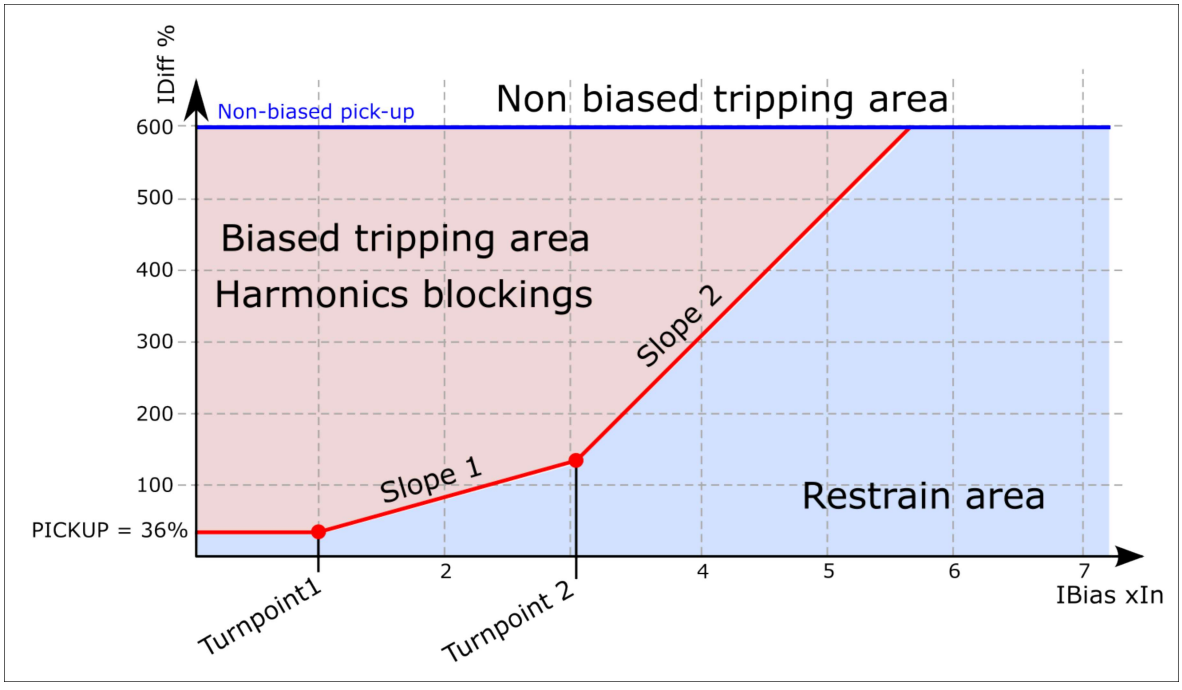

The graph is the function of measured biasing current and the differential protection current. The red line presents the allowed differential current in percentages. The settings and the ranges of the differential protection function are presented in the "Settings and signals" section of this topic.

The biasing characteristic is formed with the following formulas:

$$Diff_{bias<TP1} = I_{d>pick-up}$$

$$Diff_{bias\,TP1...TP2} = SL1 \times (Ix - TP1) + I_{d>pick-up}$$

$$Diff_{bias>TP2} = SL2 \times (Ix - TP2) + SL1 \times (TP2 - TP1) + I_{d>pick-up}$$

These form a straight line from zero current to Turnpoint (TP1). From TP1 to TP2 is the first slope (Slope 1) which causes the set biasing to be coarser when the measured current amplitude increases. When the measured current is higher that the TP2 set value, the second slope (Slope 2) is used.

Settings and signals

The settings of the differential function are a combination of line status monitoring and differential stage function settings. The following table shows the function's settings, including the general settings (in p.u.) used for pre-calculations.

Table. 4.5.2.3 - 121. Settings related to the differential function's pre-calculation.

Name	Range	Default	Description
IdL> LN mode	• On • Blocked • Test • Test/ Blocked • Off	On	Set mode of LDIF block. This parameter is visible only when *Allow setting of individual LN mode* is enabled in *General* menu.
IdL> LN behaviour	• On • Blocked • Test • Test/ Blocked • Off	-	Displays the mode of LDIF block. This parameter is visible only when *Allow setting of individual LN mode* is enabled in *General* menu.
IdL> condition	• Idb> Trip • Idb> Blocked • Idi> Trip • Idi> Blocked • 2nd Harm block on • 5th harm block on • L1 2h On • L2 2h On • L3 2h On • L1 5h On • L2 5h On • L3 5h On	-	Displays status of the protection function

© Arcteq Relays Ltd

Name	Range	Default	Description
IdL> force status to	• Normal • Idb Blocked • Idb Trip • Idi Blocked • Idi Trip • H2block On • H5block On	Normal	Force the status of the function. Visible only when *Enable stage forcing* parameter is enabled in *General* menu.

Setting group selection controls the operating characteristics of the function, i.e. the user or user-defined logic can change function parameters while the function is running.

Table. 4.5.2.3 - 122. Settings for the operating characteristics.

Name	Range	Step	Default	Description
Enable configuration	• Disabled • Enabled	-	Disabled	When configuration is enabled, the line differential function operation is blocked.
Differential calculation mode	• Add • Subtract	-	Subtract	The calculation mode of the differential current. The mode selection depends on the CTs' installation direction and the desired current directions. If the current flow on both sides is in the same direction, the differential current is subtracted. If the current flows are in the opposite directions, the differential current is added.
Bias calculation mode	• Average • Maximum	-	Average	The calculation mode of the biasing current. With the average mode the operation may be set to be more sensitive. With the maximum mode the bias is always higher and thus provides a more stable operation.
Idb> Pick-up	0.10…100.00%	0.01%	10.00%	The base sensitivity for the differential characteristics.
Turnpoint 1	0.01…50.00×I_n	0.01×I_n	1.00×I_n	Turnpoint 1 for the differential characteristics.
Slope 1	0.01…250.00%	0.01%	10.00%	Slope 1 for the differential characteristics.
Turnpoint 2	0.01…50.00×I_n	0.01×I_n	3.00×I_n	Turnpoint 2 for the differential characteristics.
Slope 2	0.01…250.00%	0.01%	200.00%	Slope 2 of the differential characteristics-
Enable harmonic blocking	• No harmonic blocking • 2nd harmonic blocking • 5th harmonic blocking • 2nd and 5th harmonic blocking	-	2nd harmonic blocking	The selection of the internal blockings to be used for the detection of transformer normal operations that cause differential currents.

Name	Range	Step	Default	Description
2nd harmonic blocking pick-up	0.01…50.00%	0.01%	15.00%	The pick-up detection for the 2nd harmonic blocking stage. This setting is only visible if the "Enable harmonic blocking" setting is set to "1" or "3".
5th harmonic blocking pick-up	0.01…50.00%	0.01%	35.00%	The pick-up detection for the 5th harmonic blocking stage. This setting is only visible if the "Enable harmonic blocking" setting is set to "2" or "3".
Enable Idi> stage	• Disabled • Enabled	-	Enabled	The selection of whether the non-biased and the non-blocked differential stage is enabled or disabled.
Idi> Non-biased pick-up	200.00…1500.00%	0.01%	600.00%	The pick-up setting for the non-biased and non-blocked differential stage. This setting is only visible if the "Enable Idi> stage" is enabled.

Table. 4.5.2.3 - 123. Local current measurement

Name	Description
IL1 Magnitude Local	Phase current magnitude measured by the local device.
IL2 Magnitude Local	
IL3 Magnitude Local	
IL1 Angle Local	Phase current angle measured by the local device.
IL2 Angle Local	
IL3 Angle Local	

Table. 4.5.2.3 - 124. Remote current measurement

Name	Unit	Description
IL1 Magnitude Remote	xIn	Phase current magnitude measured by the remote device.
IL2 Magnitude Remote	xIn	
IL3 Magnitude Remote	xIn	
IL1 Angle Remote	deg	Phase current angle measured by the remote device.
IL2 Angle Remote	deg	
IL3 Angle Remote	deg	
Received data time difference Remote1	ns	Measurement data time difference between the master node and the remote node.

© Arcteq Relays Ltd

Table. 4.5.2.3 - 125. Per unitized differential currents

Name	Unit	Description
IL1 Magnitude difference to Remote1	xIn	Difference of the local current measurement magnitude compared to the remote device.
IL2 Magnitude difference to Remote1	xIn	
IL3 Magnitude difference to Remote1	xIn	
IL1 Angle difference to Remote 1	deg	Difference of the local current measurement angle compared to the remote device.
IL2 Angle difference to Remote 1	deg	
IL3 Angle difference to Remote 1	deg	
Remote signals angle corrected	deg	Displays how much the phase current angles of the remote unit have been adjusted to match with the moment when the phase current angles of the master unit have been calculated.

Table. 4.5.2.3 - 126. Calculated differential currents.

Name	Description
L1Bias current	The calculated phase bias current
L2Bias current	
L3Bias current	
L1Diff current	The calculated phase differential current
L2Diff current	
L3Diff current	
L1Char current	The calculated phase maximum differential current allowed with current bias level
L2Char current	
L3Char current	

Table. 4.5.2.3 - 127. Output signals of the line differential function.

Name	Description
IdLb> Bias Trip	The TRIP output signal from the biased differential stage

Name	Description
IdLb> Bias Blocked	The BLOCKED output from the biased differential stage (external blocking)
Idi> Nobias Trip	The TRIP output signal from the non-biased and non-blocked differential stage
IdLi> No Bias Blocked	The BLOCKED output from the non-biased and non-blocked differential stage (external blocking)
Idb> 2nd harm block on	The output of the 2nd harmonic activation signal
Idb> 5th harm block on	The output of the 5th harmonic activation signal

Function blocking

The blocking signal is evaluated at the start of each program cycle. The blocking signals are connected to the function's dedicated input, which can be configured in the *IO → Blocking Input Control* tab of the function.

- When the pick-up element activates and the blocking signal is not active, a TRIP signal is generated, and the function starts or continues with the trip time countdown.
- When the pick-up element activates and the blocking signal is active, a BLOCKED signal is generated, and the function does not process the event further.

The blocking signal needs to reach the device minimum of 5 ms before the set operating delay has passed in order for the blocking to activate in time.

Events and registers

The line differential function (abbreviated "LDIF" in event block names) generates events from the status changes in the events listed below. The user can select which event messages are stored in the main event buffer: ON, OFF, or both. The events triggered by the function are recorded with a time stamp.

The function's outputs can be used for direct I/O controlling and user logic programming. The function also provides a resettable cumulative counter for the TRIP, 2nd Harmonic Block, 5th Harmonic Block, External Block events.

Table. 4.5.2.3 - 128. Event messages.

Event block name	Description
LDIF1	Idb> Trip ON/OFF
LDIF1	Idb> Blocked (ext) ON/OFF
LDIF1	Idi> Trip ON/OFF
LDIF1	Idi> Blocked (ext) ON/OFF
LDIF1	2nd Harmonic Block ON/OFF
LDIF1	5th Harmonic Block ON/OFF
LDIF1	L1 2nd harm ON/OFF
LDIF1	L2 2nd harm ON/OFF

© Arcteq Relays Ltd

Event block name	Description
LDIF1	L3 2nd harm ON/OFF
LDIF1	L1 5th harm ON/OFF
LDIF1	L2 5th harm ON/OFF
LDIF1	L3 5th harm ON/OFF

The function registers its operation into the last twelve (12) time-stamped registers. The table below presents the structure of the function's register content.

Table. 4.5.2.3 - 129. Register content.

Name	Description
Date and time	dd.mm.yyyy hh:mm:ss.mss
Event	Event name
L1 bias current	Phase bias current
L2 bias current	
L3 bias current	
L1 diff. current	Phase maximum differential current
L2 diff. current	
L3 diff. current	
L1 char. current	Phase maximum differential current with bias
L2 char. current	
L3 char. current	
Setting group in use	Setting group in use
Fault type	• L1, L2, L3 • L1-L2, L2-L3, L1-L3 • L1-L2-L3

4.5.2.4 Line distance protection (Z<;21)

The distance protection function provides fast operation, selective fault detection, and reliable backup protection. It operates based on the principle of impedance measurement between the relay location and the fault point. Unlike overcurrent protection, which depends on fault current magnitude, distance protection determines the fault location by calculating the impedance of the line. It calculates impedance using the voltage-to-current ratio and determines fault location based on line settings and predefined protection zones.

The relay continuously calculates the phase-to-phase and phase-to-ground impedance loops of the line. Once the fault type has been detected the respective loop will be released to operate.

Up to ten independently operating protection zones can be freely set to the forward, reverse or non-directional mode based on the application. The protection zones use quadrilateral characteristics.

The figure below shows a example with three forward zones (Z1...Z3) and one reverse zone (Z4) enabled. The fifth zone (Z5) is set as undirectional.

Figure. 4.5.2.4 - 58. Distance protection example.

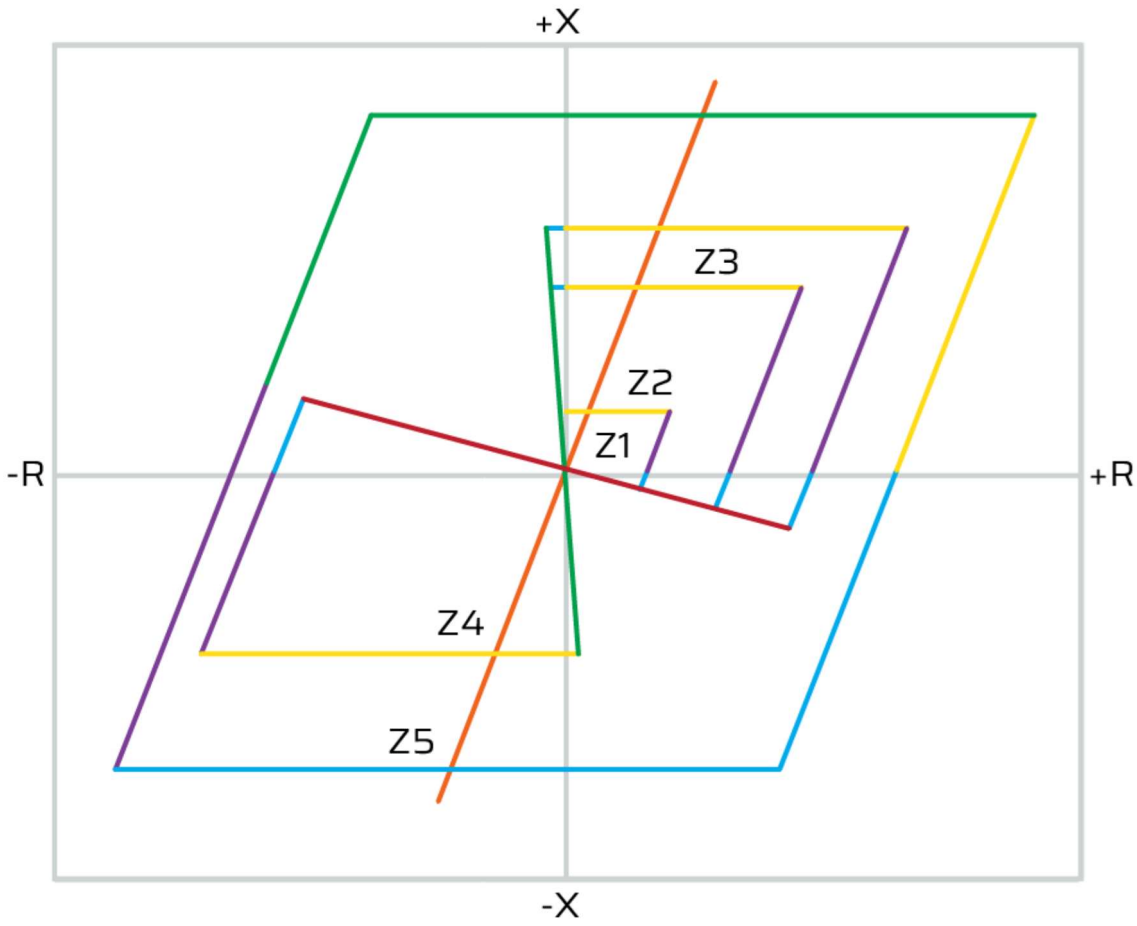

Distance protection → Info page settings

Table. 4.5.2.4 - 130. "General" section parameters.

Name	Range	Default	Description
Used residual current input	• I01 • I02 • I0Calc	I0Calc	Defines the used residual current channel used by the function.
Scale and use PP zones in	• Primary impedances • Secondary impedances	Primary impedances	Determines whether the function displays phase-to-phase measurements using primary or secondary impedances.

© Arcteq Relays Ltd
IM00099

Name	Range	Default	Description
Set PP zones in	• Primary impedances • Secondary impedances	Primary impedances	Determines whether phase-to-phase zones are defined using primary or secondary impedances.
Scale and use PE zones in	• Primary impedances • Secondary impedances	Primary impedances	Determines whether the function displays phase-to-earth measurements using primary or secondary impedances.
Set PE zones in	• Primary impedances • Secondary impedances	Primary impedances	Determines whether phase-to-earth zones are defined using primary or secondary impedances.

Table. 4.5.2.4 - 131. "Distance zones" section parameters.

Name	Range	Step	Default	Description
Z< [21] Zone 1…10 mode	• Disabled • Activated	-	Disabled	Enables or disables a Zone.
Z1PP Z1…10 Zone condition	• Normal • Start • Trip • Blocked	-	-	Displays status of the phase-to-phase zone.
Z1PE Z1…10 Zone condition	• Normal • Start • Trip • Blocked	-	-	Displays status of the phase-to-earth zone.

Table. 4.5.2.4 - 132. "Distance supporting functions" section parameters.

Name	Range	Default	Description
Load encroachment mode	• Disabled • Activated	Disabled	Enables or disables load encroachment.
Power swing and out of step tripping mode	• Disabled • Activated	Disabled	Enables or disables power swing and out of step tripping.
Power swing blocking	• Disabled • Activated	Disabled	Enables or disables power swing blocking function. This parameter is only visible when "Power swing and out of step tripping mode" is set to "Enabled".
Out of step tripping	• Disabled • Activated	Disabled	Enables or disables out of step tripping function. This parameter is only visible when "Power swing and out of step tripping mode" is set to "Enabled".

Name	Range	Default	Description
PS&OOS condition	• Normal • Power Swing blocking • Out of step Trip	-	Displays the status of power swing blocking and out of step tripping.

Distance protection → I/O page settings

Table. 4.5.2.4 - 133. Output signals of the distance protection functions in the "Direct output control" tab.

Name	Description
Power swing blocking active	Power swing blocking has been activated.
Out of step trip	Out of step trip has been activated.
Z1…10PP Zone START	The START output signal from the phase-to-phase zone.
Z1…10PP Zone TRIP	The TRIP output signal from the phase-to-phase zone.
Z1…10PP Zone BLOCKED	The BLOCKED output from the phase-to-phase zone.
Z1…10PE Zone START	The START output signal from the phase-to-earth zone.
Z1…10PE Zone TRIP	The TRIP output signal from the phase-to-earth zone.
Z1…10PE Zone BLOCKED	The BLOCKED output from the phase-to-earth zone.

Table. 4.5.2.4 - 134. Blocking inputs in the "Blocking input control" tab.

Name	Description
Z1…10PP Zone BLOCKED	Blocking input of the phase-to-phase zone.
Z1…10PE Zone BLOCKED	Blocking input of the phase-to-earth zone.

Distance protection → Events and registers page settings

The distance protection function generates events from the status changes in the events listed below. The user can select which event messages are stored in the main event buffer: ON, OFF, or both. The events triggered by the function are recorded with a time stamp.

Table. 4.5.2.4 - 135. Protection zone (phase-to-phase loops) event messages.

Event block name	Description
DPP1...DPP10	Start ON/OFF
DPP1...DPP10	Trip ON/OFF
DPP1...DPP10	Block ON/OFF
DPP1...DPP10	L12 Loop Start ON/OFF

© Arcteq Relays Ltd

Event block name	Description
DPP1...DPP10	L23 Loop Start ON/OFF
DPP1...DPP10	L31 Loop Start ON/OFF
DPP1...DPP10	L12 Loop Loadblock ON/OFF
DPP1...DPP10	L23 Loop Loadblock ON/OFF
DPP1...DPP10	L31 Loop Loadblock ON/OFF

Table. 4.5.2.4 - 136. Protection zone (phase-to-earth loops) event messages.

Event block name	Description
DPE1...DPE10	Start ON/OFF
DPE1...DPE10	Trip ON/OFF
DPE1...DPE10	Block ON/OFF
DPE1...DPE10	L1-PE Loop Start ON/OFF
DPE1...DPE10	L2-PE Loop Start ON/OFF
DPE1...DPE10	L3-PE Loop Start ON/OFF
DPE1...DPE10	L1-PE Loop Loadblock ON/OFF
DPE1...DPE10	L2-PE Loop Loadblock ON/OFF
DPE1...DPE10	L3-PE Loop Loadblock ON/OFF

Table. 4.5.2.4 - 137. Load encroachment event messages.

Event block name	Description
ENC	Loop 12 Load encroachment ON/OFF
ENC	Loop 23 Load encroachment ON/OFF
ENC	Loop 31 Load encroachment ON/OFF

Distance protection → Zone 1…10 → Info page settings

Table. 4.5.2.4 - 138. Phase to Phase and Phase to Earth General Status

Name	Range	Step	Description
Zone Status force to	• Normal • Start • Trip • Blocked	-	Force the status of the function. Visible only when *Enable stage forcing* parameter is enabled in *General* menu.

Name	Range	Step	Description
Expected operating time	0.000…1800.000 s	0.005 s	Displays the expected operating time when a fault occurs.
Time remaining to trip	0.000…1800.000 s	0.005 s	When the function has detected a fault and counts down time towards a trip, this displays how much time is left before tripping occurs.
Impedance loop selected	• None • ZL1 • ZL2 • ZL3 • ZL12 • ZL23 • ZL31	-	When a fault is detected in the zone, the fault loop is indicated here.

Table. 4.5.2.4 - 139. Statistics

Name	Range	Step	Description
Last fault Impedance Loop selected	• None • ZL1 • ZL2 • ZL3 • ZL12 • ZL23 • ZL31	-	Impedance loop of the latest recorded fault.
Last fault impedance Zf	-1800.000…1800.000 ohm	0.001 ohm	Impedance of the latest recorded fault.
Last fault impedance angle Zaf	-1800.0…1800.0 deg	0.1	Angle of the latest recorded fault.
Last fault reactance	-1800.000…1800.000 ohm	0.001 ohm	Reactance of the latest recorded fault.
Last fault location	-1800.000…1800.000 km	0.001 km	Distance of the latest recorded fault.
Clear last recorded fault	• - • Clear	-	Reset latest recorded
Zone starts	0…4294967295	1	Number of recorded "start" events.
Zone trips	0…4294967295	1	Number of recorded "trip" events.
Zone blocks	0…4294967295	1	Number of recorded "blocked" events
Clear statistics	• - • Clear	-	Reset event statistics to zero.

© Arcteq Relays Ltd

Distance protection → Zone 1…10 → Characteristics page settings

Table. 4.5.2.4 - 140. Zone characteristics settings

Name	Range	Step	Default	Description
Measured impedance marker size in characteristic graph	0.01…5.00 ohm	0.01 ohm	0.50 ohm	Adjusts the size of the impedance measurement marker in the graph.

Distance protection → Zone 1…10 → Phase to Phase Configuration page settings

Table. 4.5.2.4 - 141. Phase to Phase Configuration page general settings.

Name	Range	Step	Default	Description
Zone starter setting (Z meas < x Rmax xXmax)	1.50…150.00 xSet	0.01 xSet	3.00 xSet	Defines the maximum impedance. The measured impedance must be under the set value for the zone to operate.
Z12 Impedance / Start set	-1800.000…1800.000 Ohm/set	0.001 Ohm/ set	-	Displays the ratio between the measured impedance and the starter setting.
Z23 Impedance / Start set	-1800.000…1800.000 Ohm/set	0.001 Ohm/ set	-	
Z31 Impedance / Start set	-1800.000…1800.000 Ohm/set	0.001 Ohm/ set	-	
Zone Starter setting (Imeas / Iminset)	0.01…150.00 xIn	0.01 xIn	1.25 xIn	Defines the minimum operating current for the zone. The measured current must be over the set value for the zone to operate.
I12 Current / Start set	-1800.000…1800.000 Imeas/Iset	0.001 Imeas/ Iset	-	Displays the ratio between the measured current and the starter setting.
I23 Current / Start set	-1800.000…1800.000 Imeas/Iset	0.001 Imeas/ Iset	-	
I31 Current / Start set	-1800.000…1800.000 Imeas/Iset	0.001 Imeas/ Iset	-	
Impedance loop selected	• None • ZL12 • ZL23 • ZL31	-	-	When a fault has been detected by the zone, the impedance loop is displayed here.

Table. 4.5.2.4 - 142. Phase to Phase Configuration page settings (setting group selection controls the operating characteristics of the function).

Name	Range	Step	Default	Description
Zone operating control	• Zone common • Stage controlled	-	Zone Common	With ”Zone common” the zone direction is defined in zone general settings. With ”Stage controlled” the zone direction can be changed with setting groups.
Zone operating mode	• Forward • Reverse • Non directional	-	Forward	Defines the zone's operating direction. Visible only when "Zone operating control" has been set to "Stage controlled".
Zone load encroachment	• Not in use • Is used in this zone	-	Not in use	Determines whether or not load encroachment is enabled.
Zone linesegments forward	1…5 segs	1 segs	1 segs	Defines the number of forward line segments in the zone.
Zone linesegments reverse	1…5 segs	1 segs	1 segs	Defines the number of reverse line segments in the zone.
Zone resistive reach R<	0.10…5000.00 Ohm	0.01 Ohm	10.00 Ohm	Defines the resistive reach for the zone.
Zone reactive reach X<	0.10…5000.00 Ohm	0.01 Ohm	10.00 Ohm	Defines the reactive reach for the zone.
Zone maximum Q1 resistive reach RmaxQ1< (0 disabled)	0.00…5000.00 Ohm	0.01 Ohm	0.00 Ohm	Defines the maximum resistive reach for the zone. If the value is zero, this parameter is disabled.
Zone angle (FwdQ2 / RevQ4) Resistive reach (90 deg + set)	0.00…45.00 deg	0.01 deg	15.00 deg	Not visible when zone has been set as non directional.
Zone angle (RwdQ4 / RevQ2) Resistive reach (0 deg - set)	0.00…45.00 deg	0.01 deg	15.00 deg	Not visible when zone has been set as non directional.
Resistive reach mode	• Forward-Reverse • Forward-Backward	-	Forward-Reverse	If ”Forward-Reverse” mode is in use, Q2 resistive reach follows the Q1 setting and Q4 resistive reach follows the Q3 setting.If ”Forward-Backward” mode is in use, Q2 resistive reach follows the Q3 setting and Q4 resistive reach follows the Q1 setting. Visible when the zone has been set as non directional.

© Arcteq Relays Ltd

Name	Range	Step	Default	Description
Zone Resistive reach R< Reverse (X < 0)	0.10…5000.00 Ohm	0.01 Ohm	10.00 Ohm	Visible when the zone has been set as non directional.
Zone Reactive reach R< Reverse (X < 0)	0.10…5000.00 Ohm	0.01 Ohm	10.00 Ohm	Visible when the zone has been set as non directional.

Zone 1…10 Phase to Earth Configuration page settings

Table. 4.5.2.4 - 143. Phase to Earth Configuration page general settings.

Name	Range	Step	Default	Description
Zone starter setting (Z meas < x Rmax xXmax)	1.50…150.00 xSet	0.01 xSet	3.00 xSet	Defines the maximum impedance. The measured impedance must be under the set value for the zone to operate.
Z1 Impedance / Start set	-1800.000…1800.000 Ohm/set	0.001 Ohm/ set	-	Displays the ratio between the measured impedance and the starter setting.
Z2 Impedance / Start set	-1800.000…1800.000 Ohm/set	0.001 Ohm/ set	-	
Z3 Impedance / Start set	-1800.000…1800.000 Ohm/set	0.001 Ohm/ set	-	
Zone Starter setting (xI0n)	0.010…150.000 xI0n	0.001 xI0n	0.050 xI0n	Defines the minimum operating current for the zone. The measured current must be over the set value for the zone to operate.
Set Minimum I0 current in Primary A	-1800.000…1800.000 Apri	0.001 Apri	-	Displays the zone starter setting in primary A.
Measured I0 current in primary A	-1800.000…1800.000 Apri	0.001 Apri	-	Displays the measured I0 current in primary A.
I0 current / Start set	-1800.000…1800.000 Imeas/Iset	0.001 Imeas/ Iset	-	Displays the ratio between the measured I0 current and the starter setting.
Zone Starter setting (U0meas > U0minset)(Set 0 to bypass condition)	0.00…150.00 %U0n	0.01 %U0n	20.00 %U0n	Defines the minimum operating residual voltage for the zone. The measured voltage must be over the set value for the zone to operate. The condition is bypassed if the setting is set to 0.
U0 Voltage / Start set	-1800.000…1800.000 U0/U0set	0.001 U0/ U0set	-	Displays the ratio between the measured U0 voltage and the starter setting.

Name	Range	Step	Default	Description
Z0 meas	-1800.000…1800.000 ohm	0.001 ohm	-	Displays the measured zero sequence impedance.
Impedance Loop selected	• None • ZL1 • ZL2 • ZL3	-	-	When a fault has been detected by the zone, the impedance loop is displayed here.
Selected impedance uncorrected	-1800.000…1800.000 ohm	0.001 ohm	-	Displays the measured impedance without zero sequence compensation.
Selected impedance corrected	-1800.000…1800.000 ohm	0.001 ohm	-	Displays the measured impedance corrected with zero sequence compensation factor.
K-factor Z	-1800.000…1800.000 ohm	0.001 ohm	-	Displays the used zero sequence compensation factor magnitude.
K-factor ang	-1800.000…1800.000 deg	0.01 deg	-	Displays the used zero sequence compensation factor angle.

Table. 4.5.2.4 - 144. Phase to Earth Configuration page settings (setting group selection controls the operating characteristics of the function).

Name	Range	Step	Default	Description
Zone operating mode		-	-	
Zone operating control	• Zone common • Stage controlled	-	Zone common	With ”Zone common” the zone direction is defined in zone general settings. With ”Stage controlled” the zone direction can be changed with setting groups.
Zone Operating mode	• Forward • Reverse • Non directional	-	Forward	Defines the zone's operating direction. Visible only when "Zone operating control" has been set to "Stage controlled".
Zone load encroachment	• Not in use • Is used in this zone	-	Not in use	Determines whether or not load encroachment is enabled.
Zone linesegments forward	1…5	1	1	Defines the number of forward line segments in the zone. Not visible when zone has been set to "reverse".
Zone linesegments reverse	1…5	1	1	Defines the number of reverse line segments in the zone. Not visible when zone has been set to "forward".
Zone resistive reach R<	0.10…5000.00 Ohm	0.01 Ohm	10.00 Ohm	Defines the resistive reach for the zone.
Zone reactive reach X<	0.10…5000.00 Ohm	0.01 Ohm	10.00 Ohm	Defines the reactive reach for the zone.

© Arcteq Relays Ltd

Name	Range	Step	Default	Description
Zone maximum Q1 resistive reach RmaxQ1< (0 disabled)	0.00…5000.00 Ohm	0.01 Ohm	0.00 Ohm	Defines the maximum resistive reach for the zone. If the value is zero, this parameter is disabled.
Zone Angle (FwdQ2 / RevQ4) resistive reach (90 deg + set)	0.00…45.00 deg	0.01 deg	15.00 deg	Defines the angle of the resistive reach between the forward line segment (FwdQ2) and the reverse line segment (RevQ4). The set angle is added to 90 degrees to produce the final zone angle. Not visible when zone has been set as non directional.
Zone Angle (RwdQ4 / RevQ2) Resistive reach (0 deg - set)	0.00…45.00 deg	0.01 deg	15.00 deg	Defines the angle of the resistive reach between the forward line segment (FwdQ4) and the reverse line segment (RevQ2). The set angle is subtracted from 0 degrees to produce the final zone angle. Not visible when zone has been set as non directional.
Resistive reach mode	• Forward-Reverse • Forward-Backward	-	Forward-Reverse	Visible when the zone has been set as non directional.
Zone resistive reach R< Reverse (X < 0)	0.10…5000.00 Ohm	0.01 Ohm	10.00 Ohm	Defines the reverse resistive reach for the zone. Visible when the zone has been set as non directional.
Zone reactive reach X< Reverse (X < 0)	0.10…5000.00 Ohm	0.01 Ohm	10.00 Ohm	Defines the reverse reactive reach for the zone. Visible when the zone has been set as non directional.

Pole Slip / Out of Step [68/78] Info page settings

Table. 4.5.2.4 - 145. Pole slip / Out of step settings.

Name	Range	Step	Default	Description
Power swing blocking	• Disabled • Enabled	-	Disabled	Enable stable power swing detection.
Out of step tripping	• Disabled • Enabled	-	Disabled	Enable unstable power swing detection, also called out-of-step and pole slip.
Out of step slips to trip	1…5 slips	1	2	How many continuous pole slips needed for unstable tripping.
PS&OOS condition	• Normal • Power swing block • Out of step trip	-	-	Indicated the status of combined power swing and out of step function.

Quadrilateral characteristics

Quadrilateral characteristics define a rectangular tripping area, allowing more flexibility in settings. The quadrilateral characteristics consist of the boundaries defined with the following settings:

- Zone Resistive reach R<: Liimits the sensitivity to high-resistance faults by setting a boundary on fault resistance. The resistive reach follows the set protected line.
- Zone Reactive reach X<: Determines the maximum fault distance the relay will detect and ensures that the relay does not overreach by setting an upper bound on reactance.
- Zone Maximum resistive reach RmaxQ1<: Limits the maximum resistive reach to an absolute limit to avoid unnecessary overextension of the resistive reach.
- Zone Angle (FwdQ2/RevQ4) resistive reach and Zone Angle (RwdQ4/RevQ2) resistive reach: Used to compensate for measurement errors.

The figure below shows an example of quadrilateral characteristics.

Figure. 4.5.2.4 - 59. Example of quadrilateral characteristics.

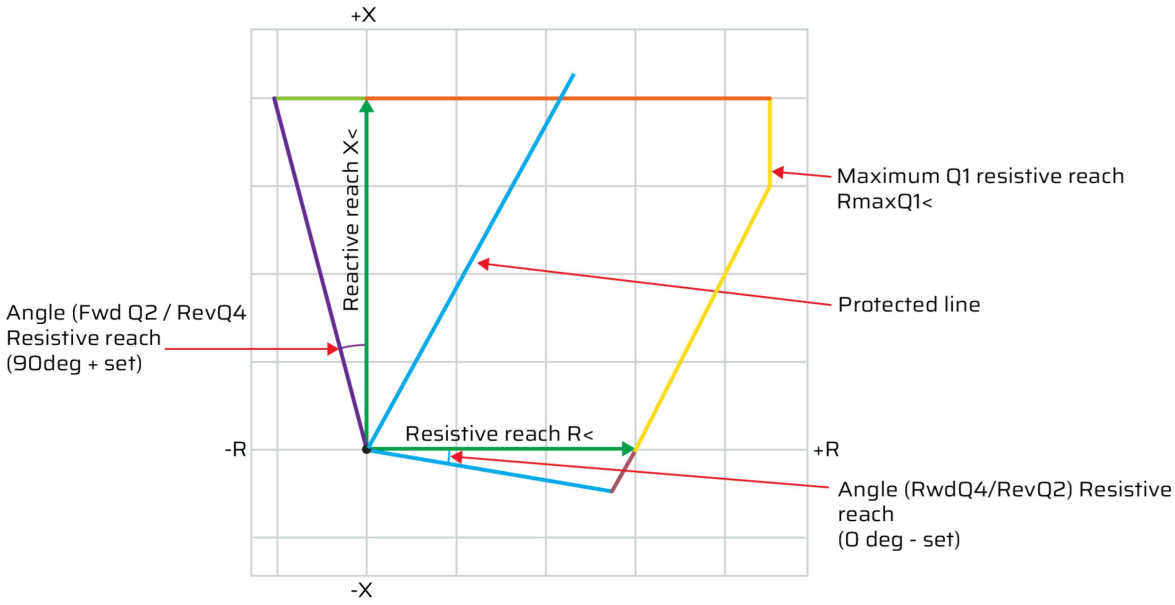

Protected line and resistive reach

The settings for the distance protection function are a combination of protected line settings and distance zone settings. The protected line can consist of one to five different segments. The line parameters can be defined in the line protection module. The distance zone characteristics follow these set line segments to achieve a more accurate resistive reach and a more accurate fault location calculation (see the figure below).

© Arcteq Relays Ltd

Figure. 4.5.2.4 - 60. Resistive reach.

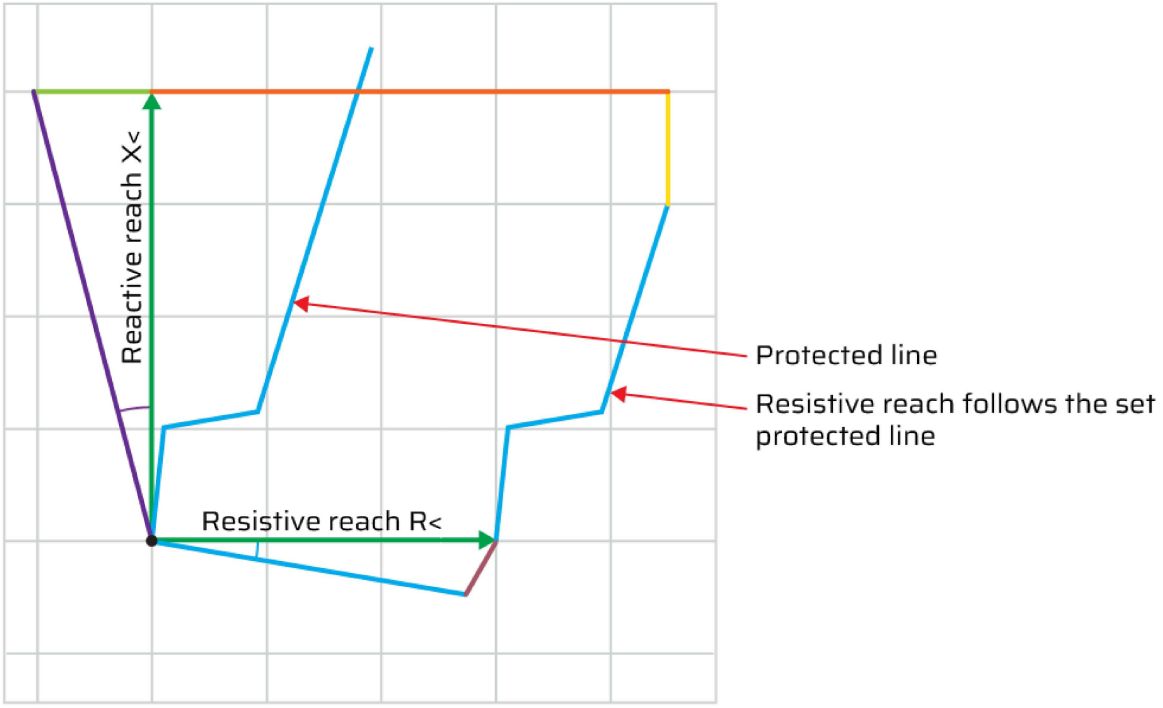

Protection zone settings

There are ten (10) independently configurable protection zones available for both phase-to-phase loops (ZxPP<) and for phase-to-earth (ZxPE<) loops. These are separate from one another. The following table shows the function's general settings, including the starter settings.

Table. 4.5.2.4 - 146. General settings related to the protection zones.

Name	Range	Default	Description
Zone condition	• Normal • Start • Trip • Blocked	-	Displays status of the protection function
Zone force status to	• Normal • Start • Trip • Blocked	Normal	Forces the status of the function. Visible only when the *Enable stage forcing* parameter is enabled in the *General* menu.
Zone Starter setting (Z meas < x Rmax x Xmax)	1.50...150 x Zmax	3.00 x Zmax	Defines the maximum impedance. The measured impedance must be under the set value for the zone to operate.
Zone Starter setting (Imeas > Iminset)	0.01...150 x In	1.25 x In	Defines the minimum operating current for the zone. The measured current must be over the set value for the zone to operate.

The protection zones can be set to operate in forward, reverse, and non-directional modes with a set time delay. The resistive and reactive reach can be set using ohmic values. The resistive reach follows the line angle of the protected line. Optionally, the maximum allowed resistive reach can be set manually, and load encroachment can be enabled for a specific zone. The operation of the zone is blocked if the current magnitude is below the threshold or if the calculated impedance exceeds the starter setting.

Setting group selection controls the operating characteristics of the function, which means that the user or user-defined logic can change function parameters while the function is running.

Table. 4.5.2.4 - 147. Settings for the zone operating characteristics.

Name	Range	Step	Default	Description
Zone Operating Mode	Forward Reverse Non-directional	-	Forward	Defines the zone's operating direction.
Zone Load Encroachment	Not in use Is used in this zone	-	Not in use	Determines whether or not load encroachment is enabled.
Zone Linesegments forward	1…5	1	1	Defines the number of forward line segments in the zone.
Zone Linesegments reverse	1…5	1	1	Defines the number of reverse line segments in the zone.
Zone Resistive reach R<	0.10…5000.00 ohm	0.01 ohm	10.00 ohm	Defines the resistive reach for the zone.
Zone Reactive reach X<	0.10…5000.00 ohm	0.01 ohm	10.00 ohm	Defines the reactive reach for the zone.
Zone Maximum Q1 resistive reach RmaxQ1< (0 disabled)	0.00…5000.00 ohm	0.01 ohm	0 ohm	Defines the maximum resistive reach for the zone. If the value is zero, this parameter is disabled.
Zone Angle (FwdQ2 / RevQ4) Resistive reach (90 deg + set)	0.00…45.00	0.01	15.00	Defines the angle of the resistive reach between the forward line segment (FwdQ2) and the reverse line segment (RevQ4). The set angle is added to 90 degrees to produce the final zone angle.
Zone Angle (RwdQ4/ RevQ2) Resistive reach (0 deg - set)	0.00…45.00	0.01	15.00	Defines the angle of the resistive reach between the forward line segment (FwdQ4) and the reverse line segment (RevQ2). The set angle is subtracted from 0 degrees to produce the final zone angle.
Zone Resistive reach R< Reverse(X < 0)	0.10…5000.00 ohm	0.01 ohm	10.00 ohm	Defines the reverse resistive reach for the zone.

© Arcteq Relays Ltd

Name	Range	Step	Default	Description
Zone Reactive reach X< Reverse (X < 0)	0.10…5000.00 ohm	0.01 ohm	10.00 ohm	Defines the reverse reactive reach for the zone.
Definite (min) operating time delay	0.000…1800.000 s	0.005 s	0.000 s	Defines the definite operating time delay for zone operation.

Load encroachment

In high-load conditions the line's impedance changes due to an increased current flow and a voltage drop. Long and heavily loaded lines can cause the measured impedance to fall within the protection zone, even though no actual fault has occurred. The optional load encroachment function restrains the zone operation within the set area even when impedance would be inside the set characteristics (see the figure below).

Figure. 4.5.2.4 - 61. Load encroachment.

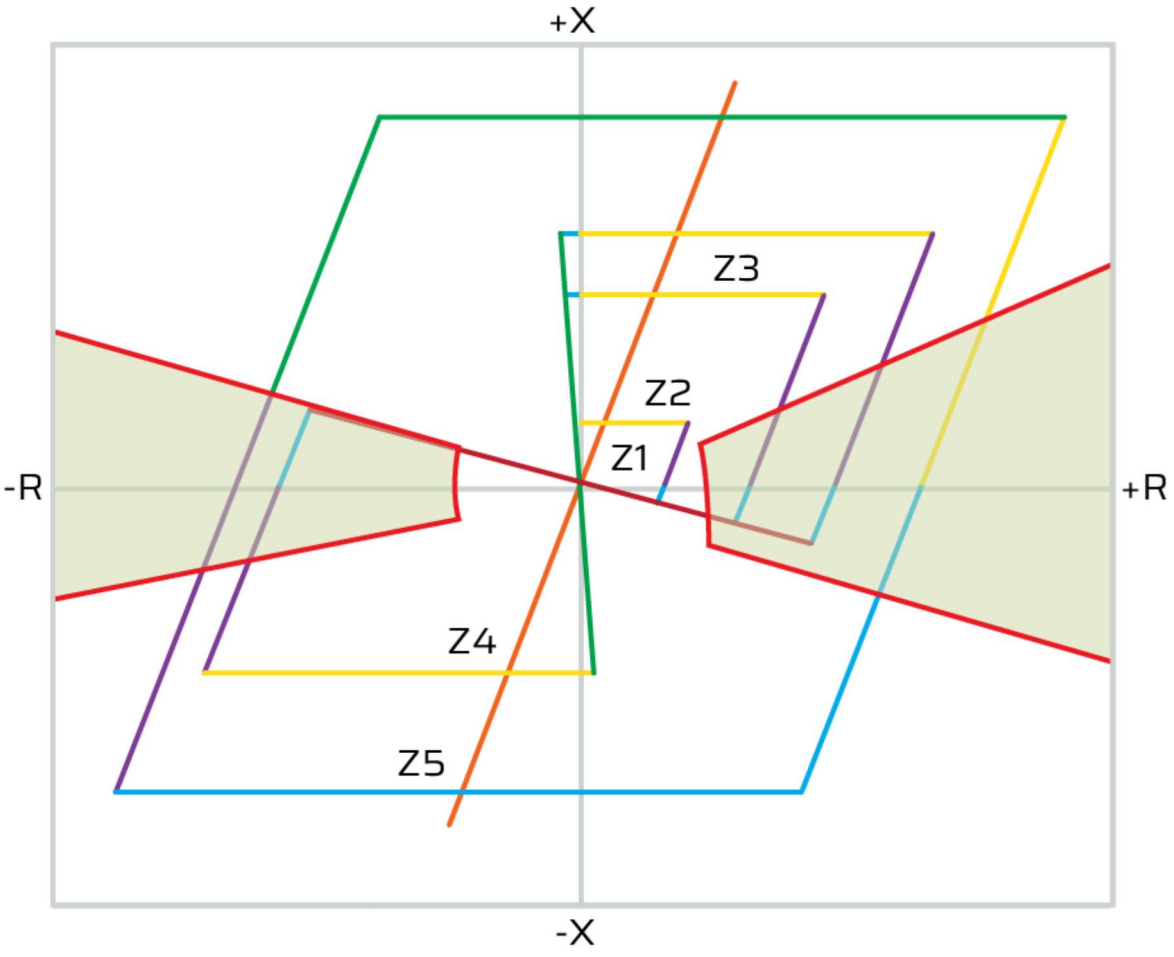

NOTICE!
Please note that when load encroachment is enabled for the zone, it also applies to all the zone characteristics it is set to overlap, including the starter element.

Load encroachment settings

Load encroachment can be enabled on a per-zone basis. Forward and reverse direction can have individual settings.

Table. 4.5.2.4 - 148. Load encroachment settings.

Name	Range	Step	Default	Description
Load encroachment	• Symmetrical FWD and REV • FWD and REV separate settings	-	Symmetrical FWD and REV	Determines whether the load encroachment settings apply for both forward and reverse directions, or whether the load encroachment settings for the directions are set separately.
Minimum impendance for load encroachment block (Zmin)	0.10…5000.00 ohm	0.01 ohm	10.00 ohm	Defines the minimum impedance for the load encroachment block.
Positive X side angle (0 deg + set)	0.10…5000.00 deg	0.01 deg	10.00 deg	Defines the angle for the positive side. The set angle is added to 0 degrees to produce the final angle.
Negative X side angle (0 deg - set)	0.10…5000.00 deg	0.01 deg	10.00 deg	Defines the angle for the negative side. The set angle is subtracted from 0 degrees to produce the final angle.
Positive X side maximum block value (Xmax, 0 not in use)	0.00…5000.00 ohm	0.01 ohm	0 ohm	Defines the maximum block value for the positive X side. If the value is zero, this parameter is disabled.
Negative X side minimum block value (Xmin, 0 not in use)	0.00…5000.00 ohm	0.01 ohm	0 ohm	Defines the minimum block value for the negative X side. If the value is zero, this parameter is disabled.
Reverse Min impendance for load encroachment block (Zmin)	0.10…5000.00 ohm	0.01 ohm	10.00 ohm	Defines the minimum impedance for the load encroachment block. This parameter is only visible if the *Load encroachment* parameter is set to "FWD and REV separate settings".
Reverse Positive X side angle (0 deg + set)	0.10…5000.00 deg	0.01 deg	10.00 deg	Defines the angle for the reverse positive X side. The set angle is added to 0 degrees to produce the final angle. This parameter is only visible if the *Load encroachment* parameter is set to "FWD and REV separate settings".
Reverse Negative X side angle (0 deg - set)	0.10…5000.00 deg	0.01 deg	10.00 deg	Defines the angle for the reverse negative X side. The set angle is subtracted from 0 degrees to produce the final angle. This parameter is only visible if the *Load encroachment* parameter is set to "FWD and REV separate settings".

© Arcteq Relays Ltd

Name	Range	Step	Default	Description
Reverse Positive X side maximum block value (Xmax, 0 not in use)	0.00…5000.00 ohm	0.01 ohm	0 ohm	Defines the maximum block value for the reverse positive X side. If the value is zero, this parameter is disabled. This parameter is only visible if the *Load encroachment* parameter is set to "FWD and REV separate settings".
Reverse Negative X side minimum block value (Xmin, 0 not in use)	0.00…5000.00 ohm	0.01 ohm	0 ohm	Defines the minimum block value for the reverse negative X side. If the value is zero, this parameter is disabled. This parameter is only visible if the *Load encroachment* parameter is set to "FWD and REV separate settings".

4.5.2.5 Power swing blocking and out-of-step tripping

Power swing is a phenomenon that occurs due to significant disturbances within the power system. If left unmitigated, it can lead to erroneous functioning of distance protection systems, potentially resulting in the unintended disconnection of transmission line switches. Moreover, if not effectively managed, power swings can cause severe damage to generators.

The dynamics of online power systems are influenced by a variety of factors, prompting generators to adapt and stabilize the system accordingly. The power system operates with all generators synchronized under normal conditions, maintaining a balance between load and generation. When a disturbance causes a significant reduction in either load or output, the rotor of the synchronous generator adjusts its angle relative to the stator to restore equilibrium. Because rotary machines possess greater inertia, these changes occur gradually and may oscillate. This process of adjusting rotor angles in response to disturbances to achieve a new stable operating point is referred to as a power swing.

Introduction

Power swing

For a stable power swing, the positive sequence impedance trajectory may cross into the operating region of a distance element. In such instances, it is essential to implement power swing blocking to prevent the distance element from activating. Failure to do so could lead to unintended operation of the distance element, which would further compromise an already weakened system. Consequently, it is crucial to identify the power swing condition as quickly as possible to avoid any unintended activation of the protection system.

Out-of-step

For unstable power swings and conditions referred to as out-of-step, out-of-step tripping is employed to divide the network into islands that maintain a balance between generation and load. Stability studies are conducted to identify the optimal locations for detecting these out-of-step conditions, enabling effective separation of the system into islands.

Out-of-step conditions present unique challenges, particularly regarding the timing of trip commands and the system's ability to regain stability following a pole slip. Implementing out-of-step tripping is crucial for preventing significant blackouts when a power swing condition becomes unstable.

Concept

In contemporary protection relays, there are several established methods for detecting power swings. Traditional algorithms typically assess the movement of impedance at specific speeds and employ blinders to restrict detection outside the designated protection zones of the distance function. Alternatively, some methods identify power swings by analyzing calculations and variations in apparent power (Q).

In Arcteq protection relays, the incremental current calculation technique is employed to effectively detect power swings. This approach enables operation without the constraints of zone-related blinders, allowing for a more flexible response. Additionally, it provides a relatively rapid reaction when a power swing is detected or when a fault occurs during the swing.

Power swing detection uses continuous calculation of incremental current. The steady power swing transitions into an unsteady swing or pole slip, as it moves from quadrant 1 to quadrant 2 (see the figure below).

Figure. 4.5.2.5 - 62. Power swing detection.

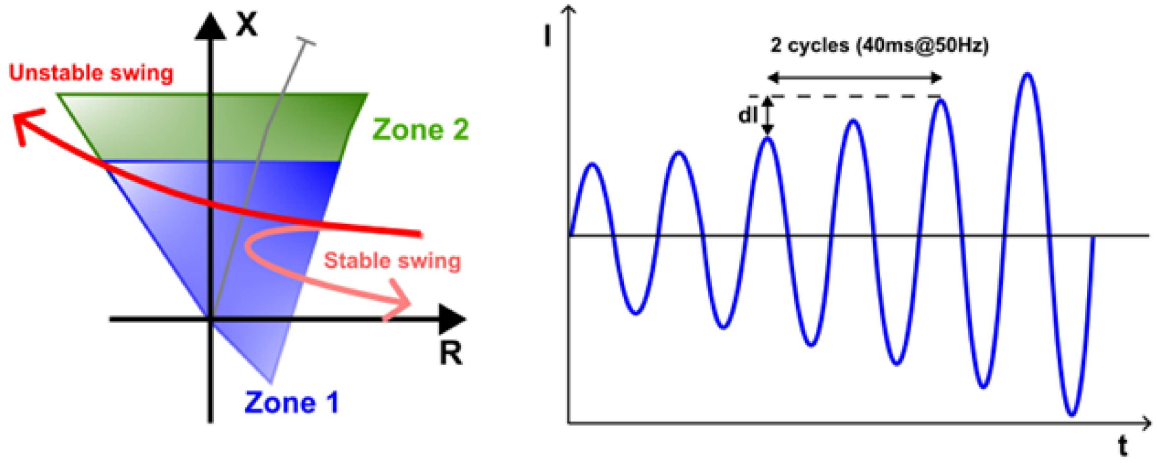

Incremental current formula

During a power swing, both the phase voltages and currents experience variations in magnitude. The incremental current method continuously calculates the difference between the current sample value and the value stored in a buffer from two cycles earlier (refer to Fig. above). A power swing is declared when the absolute value of the measured incremental current exceeds 1.0 percent of the nominal current, and this condition persists for a duration of three cycles. Benefits of incremental current formula:

- Fast reaction for power swings without zone external blinders
- Simple to use, no additional settings needed
- Quick release if fault starts during swing

Pole slip and out-of-step settings

This chapter presents the general settings for power swings. They are located in the INFO menu of the pole slip / out-of-step function. It can be accessed by following this path: *Protection → Line Protection module → Pole slip / Out of Step [68/78]* → "INFO".

© Arcteq Relays Ltd

Table. 4.5.2.5 - 149. Settings for both stable and unstable power swing.

Setting name	Range	Default	Description
Power swing blocking and out of step tripping mode	• Disabled • Activated	Disabled	Enables power swing blocking and out of step tripping mode settings.
Power swing blocking	• Disabled • Activated	Disabled	Determines whether the stable power swing detection is in use or not.
Out-of-step tripping	• Disabled • Activated	Disabled	Determines whether the unstable power swing detection (also called out-of-step and pole slip) is in use or not.
Out-of-step slips to trip	1...5 slips	2 slips	Defines the number of continuous pole slips required for unstable tripping to activate.
Force status to	• Normal • Power swing block • Out of step trip	Normal	Force the status of the function. Visible only when *Enable stage forcing* parameter is enabled in *General* menu.
PS & OOS condition	• Normal • Power swing block • Out-of-step trip	–	Indicates the status of the combined power swing and out-of-step function.

The available power swing and out-of-step output signals are located in the output matrix. It can be accessed by following this path: *Protection* → *Line Protection module* → *General line settings* → *IO* → "Direct output control".

- Power swing blocking active
- Out of step trip

Measured inputs

The power swing function necessitates the connection of all three-phase currents, IL1, IL2, and IL3, in order to measure the total incremental current within the system.

To activate the power swing blocking functionality, each phase's incremental current measurement must exceed 1.0 percent individually. Additionally, the detection of phase angles between each phase is utilized. If the phase sequence of 0/-120/120 degrees exhibits a variation greater than +/- 10 degrees, this condition is not classified as a power swing.

The steady power swing transitions into an unsteady swing or pole slip, as it moves from quadrant 1 to quadrant 2.

Table. 4.5.2.5 - 150. Measurement magnitudes used by the LVRT function.

Voltage measurement mode	Connected voltages	Description
Irrelevant	Phase currents IL1, IL2, and IL3	5ms

Application examples

Power swing and out-of-step operating principle

Power swings present a considerable challenge for the effective functioning of protective relays. During these swings, the impedance values can fluctuate into the operating range of the relay. This situation may result in unwarranted tripping of the relay in an already unstable system, thereby worsening the existing instability.

The stability of power swings is influenced by both the power transmission capacity of the line and the rotor angle. A stable power swing will ultimately transition into a steady state, whereas an unstable power swing can lead to a loss of synchronization, commonly referred to as loss of synchronism. To mitigate these issues, protective relays utilize two critical schemes: the Power Swing Blocking (PS) scheme and the Out of Step Tripping (OOS) scheme. The PS scheme is designed to prevent protective relays from activating during stable power swings, thereby allowing the power system to revert to a steady operating condition.

On the other hand, the Out-of-Synchronization (OOS) scheme is triggered when the system loses synchronization. This mechanism facilitates the controlled separation of unsynchronized components to prevent further damage. During unstable or stable power swings, distance protections and other relays should not be activated; instead, they must allow the power system to stabilize and return to a steady operating state. Distance protection elements that are prone to activation during steady or transient power swings should be temporarily disabled to avoid disconnecting the system in an arbitrary manner or at locations that have not been preselected.

Distance protection is blocked internally by both steady and unsteady power swings. Out-of-step tripping can be employed to selectively trip the system when necessary.

Figure. 4.5.2.5 - 63. Power swing blocking turning into out-of-step tripping.

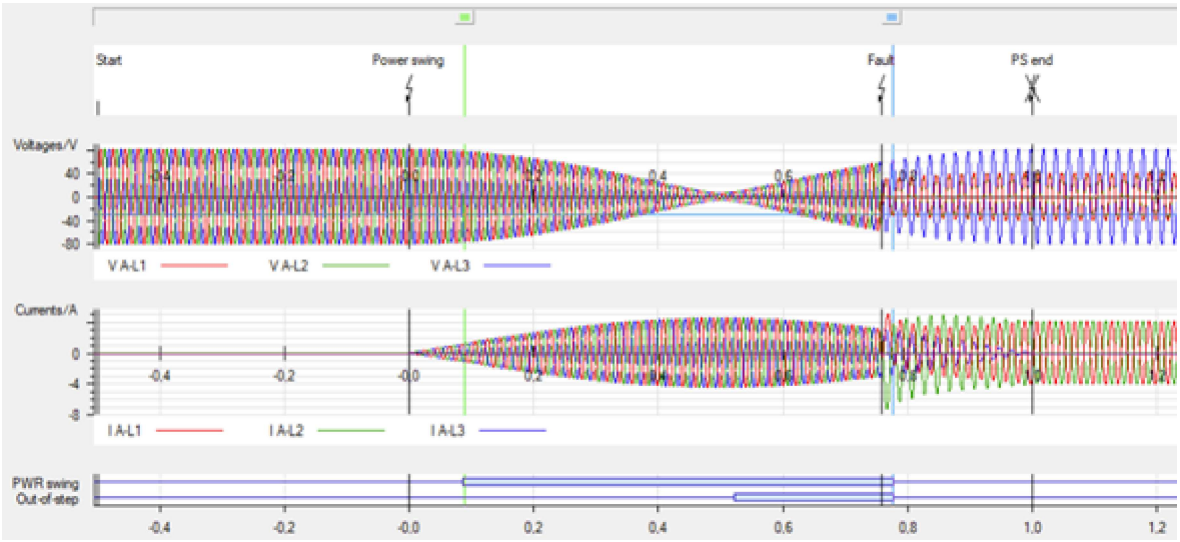

Events and registers

The Power swing / out of step function generates events from starting only. To main event buffer is possible to select status “On” or “Off” messages.

© Arcteq Relays Ltd

Table. 4.5.2.5 - 151. Event codes of the PS/OOS function.

Event block name	Description
OOS2	Power Swing Block ON/OFF
OOS2	Out-of-step Trip ON/OFF

4.5.3 Capacitor bank module

Capacitor banks are commonly used to improve the quality of the electrical supply and the efficient operation of the power system. The main purpose of the installation is to provide capacitive compensations and power factor corrections.

A capacitor unit is built up of individual capacitor elements connected in parallel, and arranged in groups that are connected in series. The capacitor unit also has an internal discharge resistor that reduces the unit's residual voltage. Capacitor banks are common in medium-voltage networks and their size can be up to 1 Mvar.

Figure. 4.5.3 - 64. The capacitor unit.

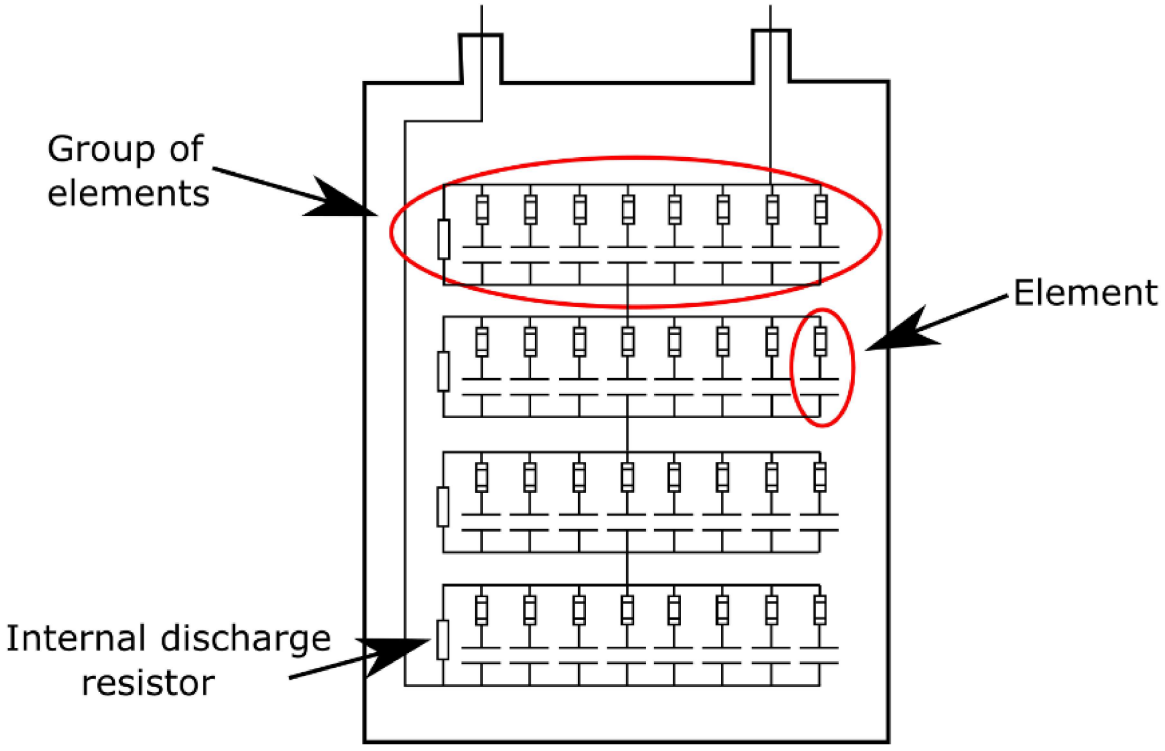

Capacitor units should be suitable for continuous operation at up to 135 % of the rated reactive power caused by the combined effects of:

- Voltage that is higher than the name plate rating at the fundamental frequency, but not over 110 % of the rated RMS voltage.
- Harmonic voltages that are superimposed on the fundamental frequency.
- Reactive power manufacturing tolerance that is up to 115 % of the rated reactive power.

Capacitor bank protection

The use of fuses for protecting the capacitor unit is an important subject in the design of capacitor banks. The fuse design affects the unit's failure mode and influences the design of the bank protection. The capacitor unit can be externally or internally fused. An external fuse protects each capacitor unit, whereas an internal fuse protects each individual capacitor element inside the capacitor unit. When a capacitor element failure occurs in an internally fused capacitor bank, the fuse only removes the affected element. The other elements, connected in parallel in the same group, remain in service but with a slightly higher voltage across them.

Wye-connected banks

Wye capacitor banks are composed of capacitor units connected in series and in parallel per phase. When the wye is earthed, it provides a low-impedance path to earth.

An earthed, wye-connected capacitor bank has the following advantages:

- A low-impedance path to earth provides inherent self-protection against lightning surge currents and give some protection against surge voltages.
- It offers a low-impedance path for high-frequency currents, and therefore the bank can be used as a filter in systems with a high harmonic content.
- Reduced transient recovery voltages for circuit breakers and other switching equipment.

There are, however, some drawbacks to earthed, wye-connected capacitor banks. The circulation of inrush currents and harmonics may cause a misoperation in the protection relay and the fuses. Unearthed wye banks do not allow zero sequence currents, third harmonic currents or large capacitor discharge currents during system earth faults to flow.

Figure. 4.5.3 - 65. Earthed wye shunt capacitor banks.

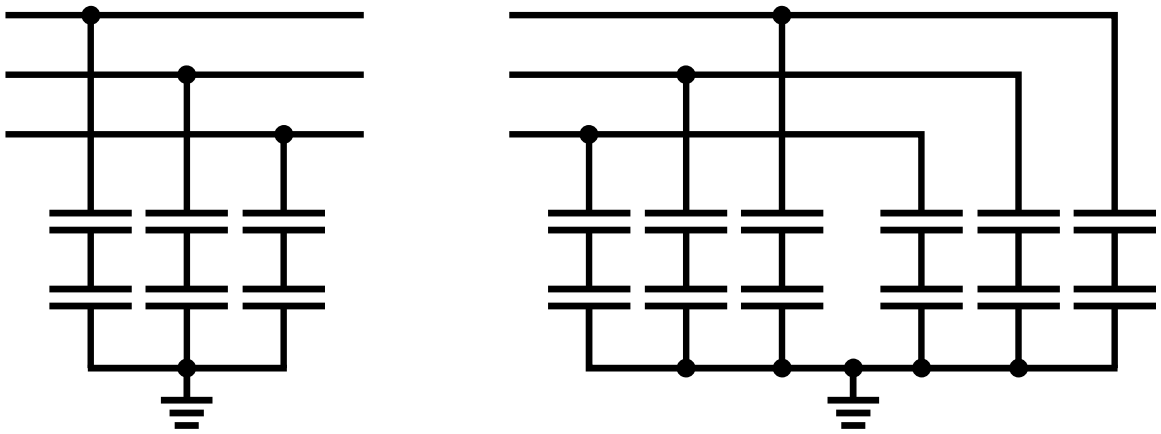

When a capacitor bank becomes too large, the bank can be split into two wye sections. With two earthed, wye-connected banks the failure of an element appears as an unbalance in the neutral. Residual current measurement with a cable core transformer in the wye section provides a more sensitive and accurate protection than a voltage-based protection.

Delta and H-connected banks

Delta-connected banks are generally used only at distribution voltages and are configured with a single series group of capacitors rated at line-to-line voltage. With only one series group of units unbalance detection is not required for protection.

© Arcteq Relays Ltd

Some larger banks use an H configuration in each phase, with a current transformer connecting the two legs to compare the current down each leg. When a capacitor fuse operates, some current flows through the current transformer. This arrangement is used in large banks with many capacitor units connected in parallel.

Protection

A capacitor bank is normally protected with unbalance protection to provide an alarm or a trip during individual fuse failures as well as to protect the bank against overcurrent. Removing a failed capacitor element or unit by its fuse results in an increased voltage across the remaining elements or units, which causes an unbalance within the bank. A continuous overvoltage (= above 1.1 p.u.) on any unit is prevented by protection relays that trip the bank.

Unbalance protection normally provides the primary protection against arcing faults within a capacitor bank as well as against other abnormalities that may damage the capacitor elements or units. Arcing faults can cause substantial damage in a small fraction of a second. Unbalance protection should have a minimum intentional delay to minimize the amount of damage done to the bank in the event of external arcing.

Figure. 4.5.3 - 66. Unbalance measurement and natural unbalance compensation.

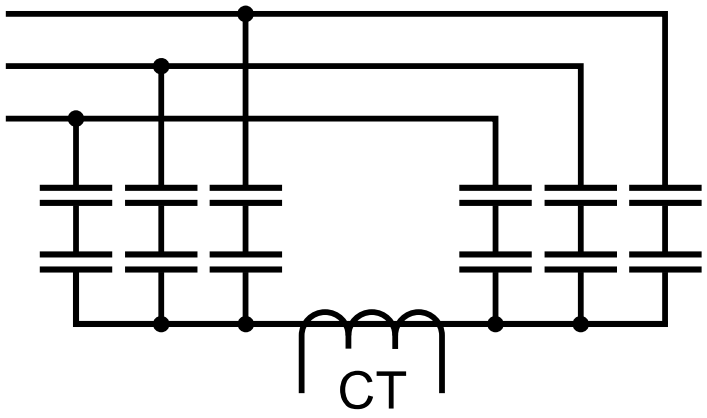

Natural unbalance compensation

In practice, the unbalance seen by an unbalance protection function is the result of losing individual capacitor units (or elements) and of the inherent system and bank unbalances. The primary unbalance, which exists on all capacitor bank installations (with or without fuses), is due to the system voltage unbalance and to capacitor manufacturing tolerances. Secondary unbalance errors are introduced by sensing device tolerances and variation as well as by relative changes in capacitance due to the difference in capacitor unit temperatures in the bank. If the inherent unbalance error approaches 50 % of the alarm setting, there needs to be compensation so that the protection relay alarms as specified when a unit or an element fails.

Please note that harmonic voltages and currents can influence the operation of the unbalance protection function unless a power frequency band-pass or other appropriate filtering is provided.

About the operating time

The time delay of the unbalance protection function trip should be minimized to reduce damage from an arcing fault within the bank's structure as well as to prevent the remaining capacitor units' exposure to overvoltage conditions beyond their permissible limits.

The unbalance protection function should have enough time delay to avoid false operations due to inrush, to system earth faults, to switching of nearby equipment, and to non-simultaneous pole operation of the energizing switch. For most applications, 0.1 s should be adequate. For unbalance protection systems that would operate on a system voltage unbalance, a delay slightly longer than the upstream protection fault clearing time is required to avoid tripping due to a system fault. Longer delays increase the probability of bank failures.

Parameters

Table. 4.5.3 - 152. Capacitor characteristics parameters.

Name	Range	Step	Default	Description
Capacitor voltage now / Ucset	0.00…1000.00 xUn	0.01 xUn	Read only	The ratio between the measured voltage and "Overvoltage allowed limit" setting.
Capacitor configuration	• Single D • Single Y • Double Y • H connected	-	Double Y	Determines the connection type of the capacitor banks.
Capacitor neutral	• Floating • Grounded	-	Floating	Defines if the capacitor neutral is grounded or not.
Capacitor rated MVar	0.01…250.00 MVar	0.01 MVar	1.00 MVar	Nominal reactive power of the capacitor bank.
Capacitor rated voltage (phase-phase)	0.01…1000 kV	0.01 kV	110.00 kV	Nominal voltage of capacitor bank.
Capacitor rated current	0.001…25000.000 A	0.001 A	Read only	Nominal current of capacitor bank. Calculated from the set rated voltage and the rated power.
Capacitance size (Ct calculated)	0.0…50 000.0 uF	0.1 uF	Read only	Rated capacitance calculated from the set rated voltage and rated power. See image below for the formula.
Calculated Ct alarm	• Disabled • Enabled > • Enabled <	-	Disabled	When enabled, an alarm signal is generated when the detected capacitance is over/under the set "Ct calculated alarm limit". The capacitance is calculated from the set rated power and measured voltage.
Ct calculated alarm limit	0.1…50 000.0 uF	0.1 uF	2000.0 uF	Sets the alarm limit for detected capacitance. Only visible when "Calculated Ct alarm" is set to "Enabled >" or "Enabled <".
Capacitor tolerance	0.00…50.00 %	0.01 %	10.00 %	Maximum allowed deviation from the rated capacitance value (uF).
Capacitor voltage tolerance	0.00…50.00 %	0.01 %	5.00 %	Maximum allowed deviation from the rated voltage value.
Capacitor tolerances included max. MVar	0.001…25 000.000 Mvar	0.001 MVar	Read only	Maximum capacitance with capacitor tolerances taken into account.

© Arcteq Relays Ltd

Name	Range	Step	Default	Description
Capacitor tolerance included nominal current	0.001…25 000 A	0.001 A	Read only	Nominal current with capacitor tolerances taken into account.
Voltage measurements in use	• Not used • In use	-	Not in use	Enables capacitor bank voltage measurement.
Set nominal current as p.u. for scaling	• No • Yes	-	No	When set to "Yes" capacitor bank functions use "Capacitor Rated Current" value instead of current transformer rated values.
Overvoltage allowed limit	0.01…1.50 xUn	0.01 xUn	1.10 xUn	Overvoltage limit for the capacitor bank.
Capacitor discharge time	0…4294967295 min	min	60 min	Amount of time teh capacitor needs to discharge.

Figure. 4.5.3 - 67. Capacitor bank "Capacitance size (Ct calculated)" calculation formula and an example calculation.

$$C_{t\ calculated} = \frac{Q_c}{2 * \pi * f_{nom} * {U_{nom}}^2}$$

$$= \frac{0{,}1\ Mvar * 10^6}{2 * \pi * 60Hz * 480V^2}$$

$$= 1151.3\ uf$$

Where

Q_c = Capacitor rated var

U_{nom} = Capacitor rated voltage

f_{nom} = Nominal frequency

Figure. 4.5.3 - 68. Capacitance measurement uses the same formula as the capacitance size calculation formula, but substitutes the measured voltage for the nominal voltage.

$$C_{t\ measured} = \frac{Q_c}{2 * \pi * f_{nom} * {U_{meas}}^2}$$

Where

Q_c = Capacitor rated var

U_{meas} = Measured voltage

f_{nom} = Nominal frequency

Table. 4.5.3 - 153. Statistics of the capacitor protection module.

Name	Range	Description
Times capacitor bank switched on	0…4294967295	Counts the number of times the bank has been switched on.
Times capacitor bank disconnected	0…4294967295	Counts the number of times the bank has been disconnected.
Time left until fully discharged	HH:mm:ss.SSS	Displays the time until the bank is fully discharged.
Overvoltages detected	0…4294967295	Counts the number of times overvoltage has been detected.
Clear statistics	• - • Clear	Clears the statistics listed above.
Time switched on after last connect	HH:mm:ss.SSS	Displays how long time has passed since last connection. Timer counting stops when the bank is disconnected.
Total switched on time	HH:mm:ss.SSS	Displays the total accumulated time the bank has been connected.
Last discharge duration	HH:mm:ss.SSS	Displays the amount of time bank has been discharging.
Last disconnect time	HH:mm:ss.SSS	Displays how long time has passed since last
Total time disconnected	HH:mm:ss.SSS	Displays teh total accumulated time the bank has been disconnected.
Total overvoltage detect time	HH:mm:ss.SSS	Total accumulated time overvoltage has been detected.
Clear total times	• - • Clear	Clear above mentioned total times.

4.5.3.1 Capacitor bank overload protection (Icol>; 49OL)

Capacitor bank overload protection is used for overload alarming and capacitor bank protection. The main difference to the overcurrent protection function is the possibility to freely program the capacitor overload curve to the function by giving the current or time points to the function or the IDMT formula coefficients.

Measured input

The function block uses phase current measurement values. The user can select the monitored magnitude to be equal either to RMS values (fundamental frequency component), to TRMS values from the whole harmonic specter of 32 components, or to peak-to-peak values.

Table. 4.5.3.1 - 154. Measurement inputs of the Icol> function.

Signal	Description
I_{L1}RMS	Fundamental frequency component of phase L1 (A) current

© Arcteq Relays Ltd

Signal	Description
I_{L2}RMS	Fundamental frequency component of phase L2 (B) current
I_{L3}RMS	Fundamental frequency component of phase L3 (C) current
I_{L1}TRMS	TRMS measurement of phase L1 (A) current
I_{L2}TRMS	TRMS measurement of phase L2 (B) current
I_{L3}TRMS	TRMS measurement of phase L3 (C) current
I_{L1}PP	Peak-to-peak measurement of phase L1 (A) current
I_{L2}PP	Peak-to-peak measurement of phase L2 (B) current
I_{L3}PP	Peak-to-peak measurement of phase L3 (C) current

General settings

The following general settings define the general behavior of the function. These settings are static i.e. it is not possible to change them by editing the setting group.

Table. 4.5.3.1 - 155. General settings of Icol> function.

Name	Range	Default	Description
ICOL> (49OL) LN mode	• On • Blocked • Test • Test/ Blocked • Off	On	Set mode of COL block. This parameter is visible only when *Allow setting of individual LN mode* is enabled in *General* menu.
ICOL> (49OL) force status to	• Normal • Start • Trip • Blocked	Normal	Force the status of the function. Visible only when *Enable stage forcing* parameter is enabled in *General* menu.
Measured magnitude	• RMS • TRMS • Peak-to-peak	RMS	Defines which available measured magnitude is used by the function.
Measurement side	• Side 1 • Side 2 • Side 3	Side 1	Defines which current measurement module is used by the function.

Pick-up setting

The I_{set} setting parameter controls the pick-up of the Icol> function. This defines the maximum allowed measured current before action from the function. The function constantly calculates the ratio between the I_{set} and the measured magnitude (I_m) for each of the three phases. The reset ratio of 97 % is built into the function and is always relative to the I_{set} value. The setting value is common for all measured phases, and when the I_m exceeds the I_{set} value (in single, dual or all phases) it triggers the pick-up operation of the function.

Setting group selection controls the operating characteristics of the function, i.e. the user or user-defined logic can change function parameters while the function is running.

Table. 4.5.3.1 - 156. Pick-up settings.

Name	Range	Step	Default	Description
I_{set}	0.10…50.00×I_n	0.01×I_n	1.20×I_n	Pick-up setting

Read-only parameters

The function's *Info* page displays useful, real-time information on the state of the protection function. It is accessed either through the device's HMI display, or through the setting tool software when it is connected to the device and its Live Edit mode is active.

Table. 4.5.3.1 - 157. Information displayed by the function.

Name	Range	Step	Description
ICOL> (49OL) LN behaviour	• On • Blocked • Test • Test/Blocked • Off	-	Displays the mode of COL block. This parameter is visible only when *Allow setting of individual LN mode* is enabled in *General* menu.
ICOL> (49OL) condition	• Normal • Start • Trip • Blocked	-	Displays status of the protection function.
Expected operating time	-1800.000...1800.000s	0.005s	Displays the expected operating time when a fault occurs. When IDMT mode is used, the expected operating time depends on the measured highest phase current value. If the measured current changes during a fault, the expected operating time changes accordingly.
Time remaining to trip	0.000...1800.000s	0.005s	When the function has detected a fault and counts down time towards a trip, this displays how much time is left before tripping occurs.
I_{meas}/I_{set} at the moment	0.00...1250.00	0.01	The ratio between the highest measured phase current and the pick-up value.

Function blocking

The blocking signal is evaluated at the start of each program cycle. The blocking signals are connected to the function's dedicated input, which can be configured in the *IO → Blocking Input Control* tab of the function.

- When the pick-up element activates and the blocking signal is not active, a START signal is generated, and the function starts or continues with the trip time countdown.
- When the pick-up element activates and the blocking signal is active, a BLOCKED signal is generated, and the function does not process the event further.
- When a START signal is already active and the blocking input signal becomes active, the START signal is reset and BLOCKED signal is generated. The release time characteristics are then processed in the same way as when the pick-up signal is reset.

© Arcteq Relays Ltd

The blocking signal needs to reach the device minimum of 5 ms before the set operating delay has passed in order for the blocking to activate in time.

The function also offers an optional internal inrush harmonic blocking feature. If the inrush harmonic pick-up is active at the same time as the protection function pick-up element, the trip delay timer continues counting down as normal. Once the countdown reaches zero, if the pick-up element remains active and the second harmonic value has dropped, the function issues a trip.

Table. 4.5.3.1 - 158. Internal inrush harmonic blocking settings.

Name	Range	Step	Default	Description
Inrush harmonic blocking (internal-only trip)	• No • Yes	-	• No	Enables and disables the 2nd harmonic blocking.
2nd harmonic blocking limit (Iharm/Ifund)	0.10…50.00%I_{fund}	0.01%I_{fund}	0.01%I_{fund}	Defines the limit of the 2nd harmonic blocking.

Operating time characteristics for trip and reset

This function supports definite time delay (DT) and inverse definite minimum time delay (IDMT) with user-programmable characteristics.

Table. 4.5.3.1 - 159. Icol> operating time setting.

Name	Range	Step	Default	Description
Im/Iset / t curvepoints	2...10	1	2	Defines the programmable measured current or the set current versus the expected operating time points.
Point 1(9) – 2(10) characteristics	• Two point steps • Two point interpolate • IDMT curve	-	Two point steps	Defines the operating time calculation between the set current points.
Imeas / Iset point 1...10	1.00...40.00xIn	0.01xIn	1.00xIn	Defines the first current point of the curve.
Time point 1...10	0.005...3600.000s	0.01s	1.00s	Defines the first time point of the curve.
Time dial setting k 1(9) – 2(10)	0.01...25.00	0.01	1.00	Defines the time multiplier setting for the IDMT curve. Note that this setting is only visible when the "Point 1(9)–2(10) characteristics" setting is set to "Two point steps" or "Two point interpolate".
IDMT Const A 1(9) – 2(10)	0.01...25.00	0.01	1.00	Defines the IDMT constant A. Note that this setting is only visible when the "Point 1(9)–2(10) characteristics" setting is set to "Two point steps" or "Two point interpolate".
IDMT Const B 1(9) – 2(10)	0.01...25.00	0.01	1.00	Defines the IDMT constant B. Note that this setting is only visible when the "Point 1(9)–2(10) characteristics" setting is set to "Two point steps" or "Two point interpolate".

Name	Range	Step	Default	Description
IDMT Const C 1(9) – 2(10)	0.01...25.00	0.01	1.00	Defines the IDMT constant C. Note that this setting is only visible when the "Point 1(9)–2(10) characteristics" setting is set to "Two point steps" or "Two point interpolate".
Operating curve test (online)	1.00...40.00	0.01	1.00	Allows the testing of the expected operating time with the given I_{meas}/I_{set} value with an online relay.

The IDMT curve formula used to calculate the segment timing behaviour is shown below:

$$t = k\left(\frac{A}{\left(\frac{I_m}{I_{set}}\right)^B - 1} + C\right)$$

Below is an example of the programmable curve settings with three separate operating time segments.

1. RED: I_{meas}/I_{set} = 1.0…2.0, IDMT IEC-NI, time dial k = 0.05, IDMT constant A = 0.14, IDMT constant B = 0.02, IDMT constant C = 0.0001.
2. BLUE: I_{meas}/I_{set} = 2.0…3.0, two point interpolate, time point = 3
3. YELLOW: I_{meas}/I_{set} = 3.0…5.0, definite time step, the set 3.0 s is held until the I_{meas}/I_{set} ratio reaches 5.0, and after that the time point = 4 is used with the time setting 0.1 s.

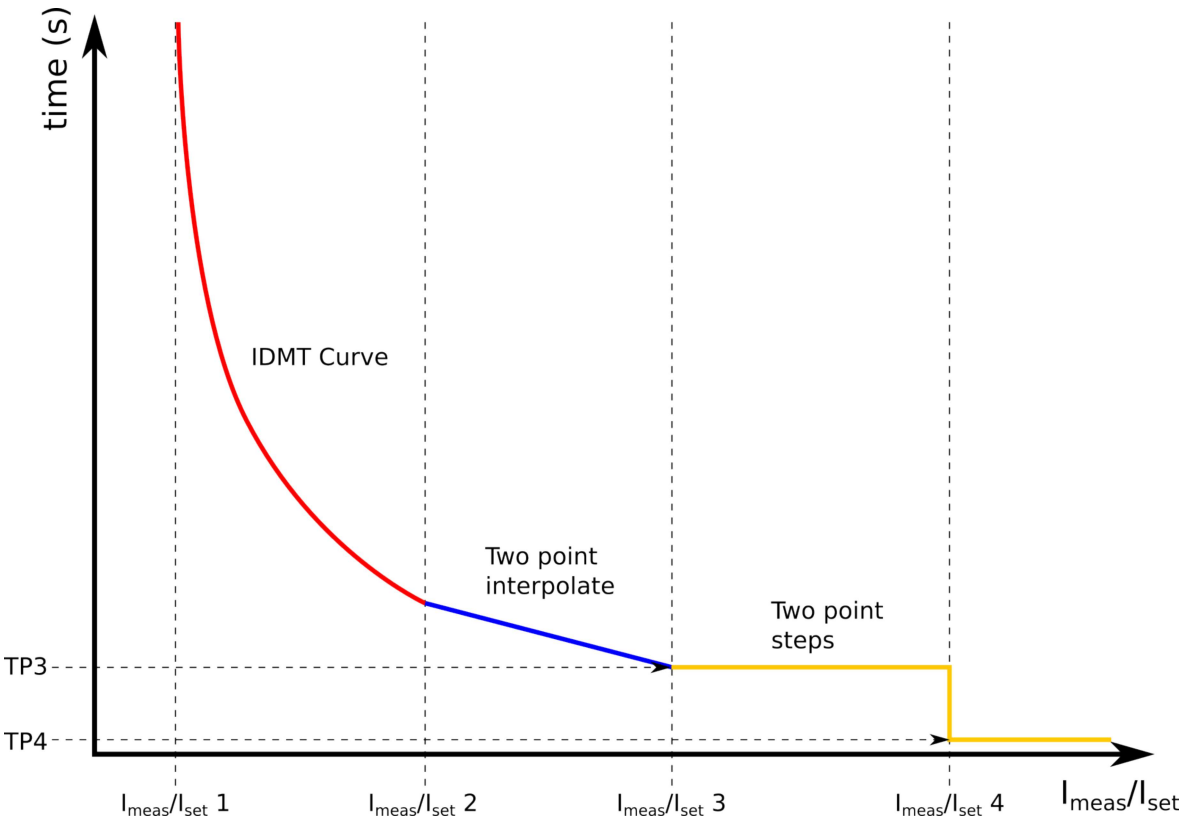

The programmable operating curve allows the user to freely program the timing behaviour of the protection stage with current or time points, either with step or two-point interpolated time calculation. When the modelled curve formula is known, it is advisable to use the curve parameters to achieve maximum accuracy.

© Arcteq Relays Ltd

Events and registers

The function's outputs can be used for direct I/O controlling and user logic programming. The function also provides a resettable cumulative counter for the START, TRIP and BLOCKED events.

The function registers its operation into the last twelve (12) time-stamped registers; this information is available for all provided instances separately. The register of the function records the ON event process data for START, TRIP or BLOCKED. The table below presents the structure of the function's register content.

Table. 4.5.3.1 - 160. Register content.

Name	Description
Date and time	dd.mm.yyyy hh:mm:ss.mss
Event	Event name
Fault type	L1-E…L1-L2-L3
Pre-trigger current	Start/trip -20 ms current
Fault current	Start/Trip current
Pre-fault current	Start -200 ms current
Trip time remaining	0…1800 s
Setting group in use	Setting group 1...8 active.

4.5.3.2 Capacitor bank neutral unbalance protection (Cnu>; 50UB)

The following figure presents a simplified function block diagram of the capacitor bank neutral unbalance function.

Measured input

The function block uses current measurement values from the residual current inputs I_{01} and I_{02} as well as the three phase current measurement inputs. In the configuration of the function can be selected which of the measurement inputs are used for the unbalance current measurement.

Signal	Description
I_{L1} CMPLX	The complex vector of I_{L1} (A) current measurement
I_{L2} CMPLX	The complex vector of I_{L2} (B) current measurement
I_{L3} CMPLX	The complex vector of I_{L3} (C) current measurement
I_{01} CMPLX	The complex vector of I_{01} current measurement
I_{02} CMPLX	The complex vector of I_{02} current measurement

General settings

The following general settings define the general behaviour of the function. These settings are static i.e. it is not possible to change them by editing the setting group.

Table. 4.5.3.2 - 161. General settings of the function.

Name	Range	Default	Description
CNU> (50UB) LN mode	• On • Blocked • Test • Test/ Blocked5: Off	On	Set mode of CNU block. This parameter is visible only when *Allow setting of individual LN mode* is enabled in *General* menu.
CNU> (50UB) force status to	• Normal • Alarm Start • Alarm On • Trip Start • Trip On • Blocked On	Normal	Force the status of the function. Visible only when *Enable stage forcing* parameter is enabled in *General* menu.
Natural unbalance compensation	• Not used • In use	Not used	Selects whether the natural unbalance compensation is used. When the compensation is in use, you can give the function more sensitive settings. When the compensation is not in use, the natural unbalance can cause the function to operate either too sensitively or too coarsely (depends on which side of the capacitor bank has more natural unbalance).
Compensate natural unbalance	• - • Compensate	-	Defines a triggering parameter which is activated during the function's commissioning on the energized capacitor bank. The parameter is self-resetting and it returns to "-" after user input and natural unbalance compensations are made.
Unbalance input select	• I01 • I02	I01	Selects the unbalance current measurement input.

Pick-up settings

The I_{set} setting parameter controls the pick-up of the Cnu> function. This defines the maximum allowed measured current before action from the function. The function constantly calculates the ratio between the I_{set} and the measured magnitude (I_m) for each of the three phases. The reset ratio of 97 % is built into the function and is always relative to the I_{set} value. The setting value is common for all measured phases, and when the I_m exceeds the I_{set} value (in single, dual or all phases) it triggers the pick-up operation of the function.

Setting group selection controls the operating characteristics of the function, i.e. the user or user-defined logic can change function parameters while the function is running.

Table. 4.5.3.2 - 162. Pick-up settings.

Name	Range	Step	Default	Description
Capacitor bank configuration	• Identical banks • Bank size differs	-	Identical banks	Selects whether the capacitor banks are identical in both sides. When the banks are identical, only one pick-up setting is required for both sides. When the sides are different in size, the settings can be made for each bank separately within the bank characteristics and manufacturer limitations.

© Arcteq Relays Ltd

Name	Range	Step	Default	Description
Count fuse operations per side for action	• No, only current • Yes, fuses or current	-	No, only current	Selects whether the fuse operations are counted per side and per phase in addition to the unbalance current monitoring.
Pick-up setting I_{set} alarm	0.10…50.00×In	0.01×In	0.1×In	Defines the pick-up threshold for the alarm signal. Monitors the unbalance current value.
Pick-up setting for fuse operations alarm	1…50 fuses	1 fuse	3 fuses	Defines the pick-up threshold per side for counted fuse operations. Please note that this setting requires that the "Count fuse operations per side for action" parameter is set to "Yes, fuses or current".
Pick-up setting I_{set} alarm, side 2	0.10…50.00×In	0.01×In	0.1×In	Defines the threshold for the alarm signal on Side 2. Monitors the unbalance current value. Please note that this setting requires that the "Capacitor bank configuration" parameter is set to "Bank size differs".
Pick-up setting for fuse operations alarm, side 2	1…50 fuses	1 fuse	3 fuses	Defines the pick-up threshold per side for counted fuse operations for side 2. Please note that this setting requires that the "Count fuse operations per side for action" parameter is set to "Yes, fuses or current" as well as that the "Capacitor bank configuration" parameter is set to "Bank size differs".
Definite operating time delay for alarm	0…1800.000s	0.005s	5.000s	Defines the definite time delay between the pick-up terms being met and issuing an alarm signal.
Definite operating time delay for alarm, side 2	0…1800.000s	0.005s	5.000s	Defines the definite time delay for side 2 between the pick-up terms being met and issuing an alarm signal. Please note that this setting requires that the "Capacitor bank configuration" parameter is set to "Bank size differs".
Pick-up setting I_{set} trip	0.10…50.00×In	0.01×In	0.2×In	Defines the pick-up threshold for the trip signal. Monitors the unbalance current value.
Pick-up setting for fuse operations trip	1…50 fuses	1 fuse	5 fuses	Defines the pick-up threshold per side for counted fuse operations. Please note that this setting requires that the "Count fuse operations per side for action" parameter is set to "Yes, fuses or current".
Pick-up setting Iset trip, side 2	0.10…50.00×In	0.01×In	0.2×In	Defines the pick-up threshold for the trip signal for side 2. Monitors the unbalance current value. Please note that this setting requires that the "Capacitor bank configuration" parameter is set to "Bank size differs".
Pick-up setting for fuse operations trip, side 2	1…50 fuses	1 fuse	5 fuses	Defines the pick-up threshold per side for counted fuse operations for side 2. Please note that this setting requires that the "Count fuse operations per side for action" parameter is set to "Yes, fuses or current" as well as that the "Capacitor bank configuration" parameter is set to "Bank size differs".

Read-only parameters

The function's *Info* page displays useful, real-time information on the state of the protection function. It is accessed either through the device's HMI display, or through the setting tool software when it is connected to the device and its Live Edit mode is active.

Table. 4.5.3.2 - 163. Information displayed by the function.

Name	Range	Step	Description
CNU> (50UB) LN behaviour	• On • Blocked • Test • Test/Blocked • Off	-	Displays the mode of CNU block. This parameter is visible only when *Allow setting of individual LN mode* is enabled in *General* menu.
Measured unbalance current	0.00...50.00 A	0.01 A	Unbalance current in amperes.
Unbalance current angle	-360.00...360.00 deg	0.01 deg	Unbalance current angle.
CNU> (50UB) condition	• Normal • Start • Trip • Blocked	-	Displays status of the protection function.
Expected Alarm time	-1800.000...1800.000s	0.005s	Displays the expected time to alarm when a fault occurs. When IDMT mode is used, the expected operating time depends on the current unbalance value. If the measured current changes during a fault, the expected operating time changes accordingly.
Time remaining to Alarm	0.000...1800.000s	0.005s	When the function has detected a fault and counts down time towards an alarm, this displays how much time is left before tripping occurs.
I_{meas}/I_{set} Alarm at the moment	0.00...1250.00	0.01	The ratio between the highest measured current unbalance and the pick-up value.
Expected operating time	-1800.000...1800.000s	0.005s	Displays the expected operating time when a fault occurs. When IDMT mode is used, the expected operating time depends on the current unbalance. If the measured current changes during a fault, the expected operating time changes accordingly.
Time remaining to trip	0.000...1800.000s	0.005s	When the function has detected a fault and counts down time towards a trip, this displays how much time is left before tripping occurs.
I_{meas}/I_{set} Trip at the moment	0.00...1250.00	0.01	The ratio between the current unbalance and the pick-up value.

Function blocking

The blocking signal is evaluated at the start of each program cycle. The blocking signals are connected to the function's dedicated input, which can be configured in the *IO → Blocking Input Control* tab of the function.

© Arcteq Relays Ltd

- When the pick-up element activates and the blocking signal is not active, a START signal is generated, and the function starts or continues with the trip time countdown.
- When the pick-up element activates and the blocking signal is active, a BLOCKED signal is generated, and the function does not process the event further.
- When a START signal is already active and the blocking input signal becomes active, the START signal is reset and BLOCKED signal is generated. The release time characteristics are then processed in the same way as when the pick-up signal is reset.

The blocking signal needs to reach the device minimum of 5 ms before the set operating delay has passed in order for the blocking to activate in time.

The function also offers an optional internal inrush harmonic blocking feature. If the inrush harmonic pick-up is active at the same time as the protection function pick-up element, the trip delay timer continues counting down as normal. Once the countdown reaches zero, if the pick-up element remains active and the second harmonic value has dropped, the function issues a trip.

Table. 4.5.3.2 - 164. Internal inrush harmonic blocking settings.

Name	Range	Step	Default	Description
Inrush harmonic blocking (internal-only trip)	• No • Yes	-	• No	Enables and disables the 2nd harmonic blocking.
2nd harmonic blocking limit (Iharm/Ifund)	0.10…50.00%I_{fund}	0.01%I_{fund}	0.01%I_{fund}	Defines the limit of the 2nd harmonic blocking.

Operating time characteristics for reset

This function supports definite time delay (DT) time characteristics for alarm and trip time counters. For detailed information on the programmable reset behavior of the function please refer to the chapter "General properties of a protection function" and its section "Operating time characteristics".

Events and registers

The capacitor bank neutral unbalance function (abbreviated "CNU" in event block names) generates events and registers from the status changes in the events listed below. The user can select which event messages are stored in the main event buffer: ON, OFF, or both. The function offers one (1) independent stage. The events triggered by the function are recorded with a time stamp.

The function's outputs can be used for direct I/O controlling and user logic programming. The function also provides a resettable cumulative counter for the ALARM START, ALARM, START, TRIP and BLOCKED events.

Table. 4.5.3.2 - 165. Event messages.

Event block name	Event names
CNU1	Alarm Start ON/OFF
CNU1	Alarm ON/OFF
CNU1	Start ON/OFF
CNU1	Trip ON/OFF
CNU1	Unbalance detected Bank A ON/OFF

Event block name	Event names
CNU1	Unbalance detected Bank B ON/OFF
CNU1	Compensating natural unbalance ON/OFF

The function registers its operation into the last twelve (12) time-stamped registers; this information is available for all provided instances separately. The register of the function records the ON event process data for START, TRIP or BLOCKED. The table below presents the structure of the function's register content.

Table. 4.5.3.2 - 166. Register content.

Name	Description
Date and time	dd.mm.yyyy hh:mm:ss.mss
Event	Event name
Fault side	A, B
Unbalance current	Measured unbalance current
Fuse operations A	Number if fuses operated
Fuse operations B	Number of fuses operated
Trip time remaining	0…1800 s
Setting group in use	Setting group 1...8 active.

4.5.3.3 Capacitor bank current unbalance protection (Iuc>; 46C)

The capacitor bank current unbalance protection is used in protecting the capacitor bank with a double wye configuration. The operating decisions are based on phase current magnitudes which the function constantly measures.

Measured input

The function block uses fundamental frequency component of phase current measurement channels.

Table. 4.5.3.3 - 167. Measurement inputs of the Iuc> function.

Signal	Description
I_{L1}RMS	Fundamental frequency component of phase L1 (A) current measurement
I_{L2}RMS	Fundamental frequency component of phase L2 (B) current measurement
I_{L3}RMS	Fundamental frequency component of phase L3 (C) current measurement

General settings

The following general settings define the general behavior of the function. These settings are static i.e. it is not possible to change them by editing the setting group.

© Arcteq Relays Ltd

Table. 4.5.3.3 - 168. General settings of the function.

Name	Range	Default	Description
IUC> LN mode	• On • Blocked • Test • Test/ Blocked • Off	On	Set mode of UCP block. This parameter is visible only when *Allow setting of individual LN mode* is enabled in *General* menu.
IUC> force status to	• Normal • Blocked • StartAlarm • Alarm • StartTrip • Trip	Normal	Force the status of the function. Visible only when *Enable stage forcing* parameter is enabled in *General* menu.

Pick-up settings

Figure. 4.5.3.3 - 69. Measurement connection of the Iuc> function.

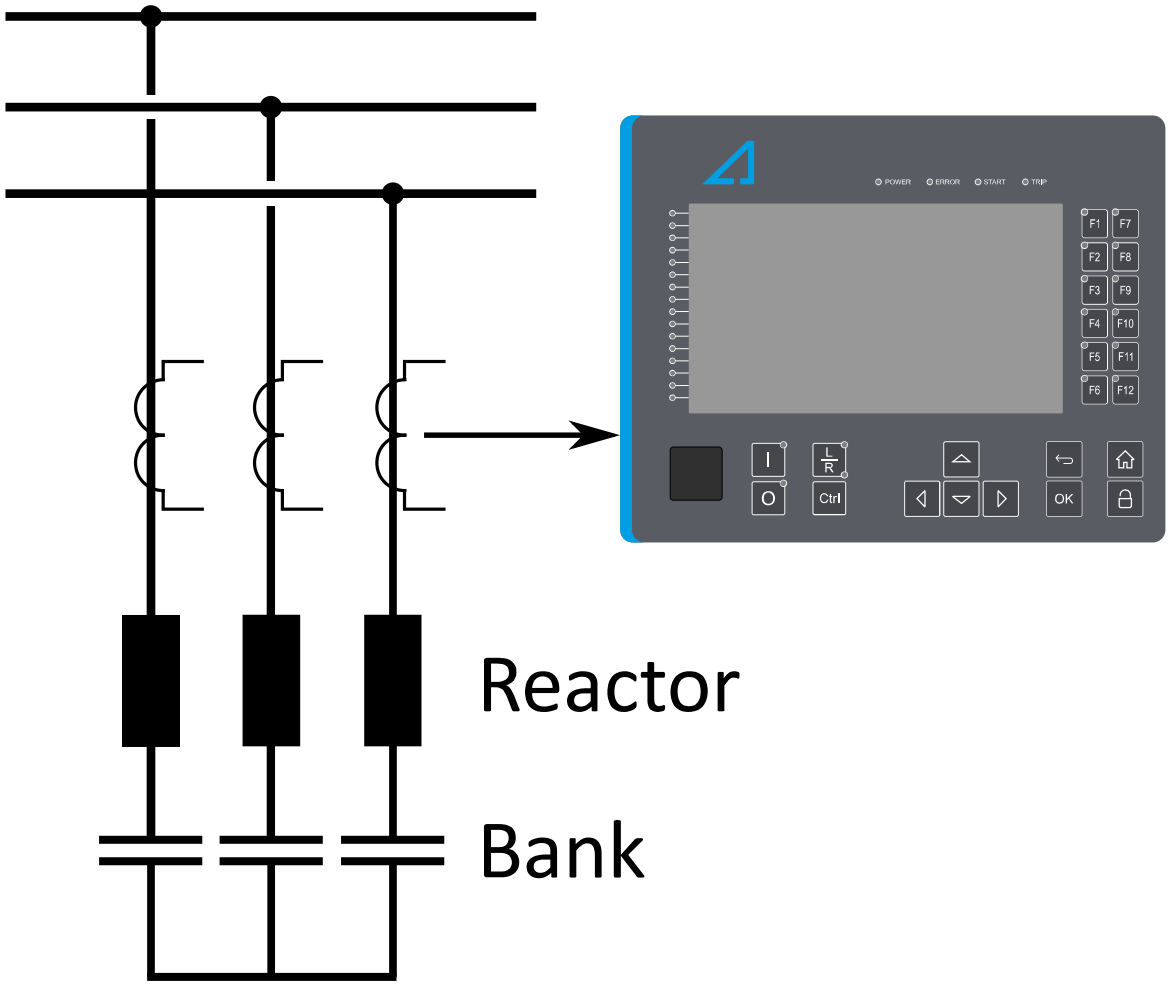

$$I_{unb} = \frac{\max(I_{L1}, I_{L2}, I_{L3}) - \min(I_{L1}, I_{L2}, I_{L3})}{\text{mean}(I_{L1}, I_{L2}, I_{L3})}$$

The protection function uses a formula which takes the highest measured value of the phase's current, then subtracts from this value the lowest measured value of the phase's current, and finally divides the result with the mean of all phases. This value is then compared to the *Iset Alarm* and the *Iset Trip* parameters. The function constantly calculates the ratio between the I_{set} and the calculated magnitude (I_{unb}). The reset ratio of 97 % is built into the function and is always relative to the I_{set} value.

Setting group selection controls the operating characteristics of the function, i.e. the user or user-defined logic can change function parameters while the function is running.

Table. 4.5.3.3 - 169. Pick-up settings.

Name	Range	Step	Default	Description
Iset Alarm	0.10…50.00×I_n	0.01×I_n	1.20×I_n	Defines the pick-up setting for the alarm.
Iset Trip	0.10…50.00×I_n	0.01×I_n	1.20×I_n	Defines the pick-up setting for the trip.
Definite time delay alarm	0.000…1 800.00s	0.005s	0.04s	Defines the definite time delay for the ALARM signal.
Definite time delay trip	0.000…1 800.00s	0.005s	0.04s	Defines the definite time delay for the TRIP signal.

Read-only parameters

The function's *Info* page displays useful, real-time information on the state of the protection function. It is accessed either through the device's HMI display, or through the setting tool software when it is connected to the device and its Live Edit mode is active.

Table. 4.5.3.3 - 170. Information displayed by the function.

Name	Range	Step	Description
IUC> LN behaviour	• On • Blocked • Test • Test/Blocked • Off	-	Displays the mode of UCP block. This parameter is visible only when *Allow setting of individual LN mode* is enabled in *General* menu.
IUC> condition	• Normal • Blocked • StartOn(Alarm) • StartOn(Alarm&Trip) • StartOn(Trip) • AlarmOn • StartOn • StartOn,AlarmOn • TripOn • AlarmOn,TripOn • MultistatusOn	-	Displays status of the protection function.
Expected time to Alarm	-1800.000...1800.000s	0.005s	Displays the expected time to alarm when a fault occurs.
Time remaining to Alarm	0.000...1800.000s	0.005s	When the function has detected a fault and counts down time towards an alarm, this displays how much time is left before tripping occurs.

© Arcteq Relays Ltd

Name	Range	Step	Description
I_{meas}/I_{set} Alarm at the moment	0.00...1250.00	0.01	The ratio between the highest measured current unbalance and the pick-up value.
Expected time to Trip	-1800.000...1800.000s	0.005s	Displays the expected operating time when a fault occurs. When IDMT mode is used, the expected operating time depends on the measured highest phase current value. If the measured current changes during a fault, the expected operating time changes accordingly.
Time remaining to trip	0.000...1800.000s	0.005s	When the function has detected a fault and counts down time towards a trip, this displays how much time is left before tripping occurs.
I_{meas}/I_{set} at the moment	0.00...1250.00	0.01	The ratio between the highest measured phase current and the pick-up value.

Function blocking

The blocking signal is evaluated at the start of each program cycle. The blocking signals are connected to the function's dedicated input, which can be configured in the *IO → Blocking Input Control* tab of the function.

- When the pick-up element activates and the blocking signal is not active, a START signal is generated, and the function starts or continues with the trip time countdown.
- When the pick-up element activates and the blocking signal is active, a BLOCKED signal is generated, and the function does not process the event further.
- When a START signal is already active and the blocking input signal becomes active, the START signal is reset and BLOCKED signal is generated. The release time characteristics are then processed in the same way as when the pick-up signal is reset.

The blocking signal needs to reach the device minimum of 5 ms before the set operating delay has passed in order for the blocking to activate in time.

The function also offers an optional internal inrush harmonic blocking feature. If the inrush harmonic pick-up is active at the same time as the protection function pick-up element, the trip delay timer continues counting down as normal. Once the countdown reaches zero, if the pick-up element remains active and the second harmonic value has dropped, the function issues a trip.

Table. 4.5.3.3 - 171. Internal inrush harmonic blocking settings.

Name	Range	Step	Default	Description
Inrush harmonic blocking (internal-only trip)	• No • Yes	-	• No	Enables and disables the 2nd harmonic blocking.
2nd harmonic blocking limit (Iharm/Ifund)	0.10…50.00%I_{fund}	0.01%I_{fund}	0.01%I_{fund}	Defines the limit of the 2nd harmonic blocking.

Events and registers

The capacitor bank current unbalance protection function (abbreviated "UCP" in event block names) generates events and registers from the status changes in the events listed below. The user can select which event messages are stored in the main event buffer: ON, OFF, or both. The function offers one (1) independent stage. The events triggered by the function are recorded with a time stamp.

The function's outputs can be used for direct I/O controlling and user logic programming. The function also provides a resettable cumulative counter for the ALARM START, ALARM, START, TRIP and BLOCKED events.

Table. 4.5.3.3 - 172. Event messages.

Event block name	Event names
UCP1	Alarm Start ON/OFF
UCP1	Alarm ON/OFF
UCP1	Start ON/OFF
UCP1	Trip ON/OFF
UCP1	Block ON/OFF
UCP1	Harmonic block ON/OFF

The function registers its operation into the last twelve (12) time-stamped registers. The register of the function records the ON event process data for START, TRIP or BLOCKED. The table below presents the structure of the function's register content.

Table. 4.5.3.3 - 173. Register content.

Name	Description
Date and time	dd.mm.yyyy hh:mm:ss.mss
Event	Event name
Pre-trigger current	Start/Trip -20 ms current
Fault current	Start/Trip current
Prefault current	Start -200ms current
Meas/AL set	The ratio between the measurement & the alarm setting
Meas TR/set	The ratio of the measurement & the trip setting
Trip time remaining	0 ms...1800s
Setting group in use	Setting group 1...8 active.

© Arcteq Relays Ltd

4.5.4 Non-directional overcurrent protection (I>; 50/51)

The non-directional overcurrent function is used for instant and time-delayed overcurrent and short-circuit protection. The function is used for one-phase, two-phase or three-phase overcurrent and short circuit protection. The function offers four (4) independent stages. The operating decisions are based on phase current magnitude, constantly measured by the function.

Measured input

The function block uses phase current measurement values. The user can select the monitored magnitude to be equal either to RMS values (fundamental frequency component), to TRMS values from the whole harmonic specter of 32 components, or to peak-to-peak values.

Table. 4.5.4 - 174. Measurement inputs of the I> function.

Signal	Description
I_{L1}RMS	Fundamental frequency component of phase L1 (A) current measurement
I_{L2}RMS	Fundamental frequency component of phase L2 (B) current measurement
I_{L3}RMS	Fundamental frequency component of phase L3 (C) current measurement
I_{L1}TRMS	TRMS measurement of phase L1 (A) current
I_{L2}TRMS	TRMS measurement of phase L2 (B) current
I_{L3}TRMS	TRMS measurement of phase L3 (C) current
I_{L1}PP	Peak-to-peak measurement of phase L1 (A) current
I_{L2}PP	Peak-to-peak measurement of phase L2 (B) current
I_{L3}PP	Peak-to-peak measurement of phase L3 (C) current

General settings

The following general settings define the general behavior of the function. These settings are static i.e. it is not possible to change them by editing the setting group.

Table. 4.5.4 - 175. General settings of the function.

Name	Range	Default	Description
Setting control from comm bus	• Disabled • Allowed	• Disabled	Activating this parameter allows changing the pick-up level of the protection stage via SCADA.
I> LN mode	• On • Blocked • Test • Test/ Blocked • Off	• On	Set mode of NOC block. This parameter is visible only when *Allow setting of individual LN mode* is enabled in *General* menu.

Name	Range	Default	Description
I> force status to	• Normal • Start • Trip • Blocked • Start A • Start B • Start C • Trip A • Trip B • Trip C • Start AB • Start BC • Start CA • Start ABC • Trip AB • Trip BC • Trip CA • Trip ABC	• Normal	Force the status of the function. Visible only when *Enable stage forcing* parameter is enabled in *General* menu.
Measured magnitude	• RMS • TRMS • Peak-to-peak	• RMS	Defines which available measured magnitude is used by the function.
Measurement side	• Side 1 • Side 2 • Side 3	• Side 1	Defines which current measurement module is used by the function.

Pick-up settings

The I_{set} setting parameter controls the pick-up of the I> function. This defines the maximum allowed measured current before action from the function. The function constantly calculates the ratio between the I_{set} and the measured magnitude (I_m) for each of the three phases. The reset ratio of 97 % is built into the function and is always relative to the I_{set} value. The setting value is common for all measured phases, and when the I_m exceeds the I_{set} value (in single, dual or all phases) it triggers the pick-up operation of the function.

Setting group selection controls the operating characteristics of the function, i.e. the user or user-defined logic can change function parameters while the function is running.

Table. 4.5.4 - 176. Pick-up settings.

Name	Range	Step	Default	Description
I_{set}	0.10…50.00×I_n	0.01×I_n	1.20×I_n	Pick-up setting

Read-only parameters

The function's *Info* page displays useful, real-time information on the state of the protection function. It is accessed either through the device's HMI display, or through the setting tool software when it is connected to the device and its Live Edit mode is active.

© Arcteq Relays Ltd

Table. 4.5.4 - 177. Information displayed by the function.

Name	Range	Step	Description
I> LN behaviour	• On • Blocked • Test • Test/Blocked • Off	-	Displays the mode of NOC block. This parameter is visible only when *Allow setting of individual LN mode* is enabled in *General* menu.
I> condition	• Normal • Start • Trip • Blocked	-	Displays status of the protection function.
I> phases condition	• Normal • Start A • Start B • Start C • Trip A • Trip B • Trip C • Start AB • Start BC • Start CA • Start ABC • Trip AB • Trip BC • Trip CA • Trip ABC	-	Displays the status of phases individually.
Expected operating time	0.000...1800.000s	0.005s	Displays the expected operating time when a fault occurs. When IDMT mode is used, the expected operating time depends on the measured highest phase current value. If the measured current changes during a fault, the expected operating time changes accordingly.
Time remaining to trip	-1800.000...1800.000s	0.005s	When the function has detected a fault and counts down time towards a trip, this displays how much time is left before tripping occurs.
I_{meas}/I_{set} at the moment	0.00...1250.00	0.01	The ratio between the highest measured phase current and the pick-up value.

Function blocking

The blocking signal is evaluated at the start of each program cycle. The blocking signals are connected to the function's dedicated input, which can be configured in the *IO → Blocking Input Control* tab of the function.

- When the pick-up element activates and the blocking signal is not active, a START signal is generated, and the function starts or continues with the trip time countdown.
- When the pick-up element activates and the blocking signal is active, a BLOCKED signal is generated, and the function does not process the event further.
- When a START signal is already active and the blocking input signal becomes active, the START signal is reset and BLOCKED signal is generated. The release time characteristics are then processed in the same way as when the pick-up signal is reset.

The blocking signal needs to reach the device minimum of 5 ms before the set operating delay has passed in order for the blocking to activate in time.

The function also offers an optional internal inrush harmonic blocking feature. If the inrush harmonic pick-up is active at the same time as the protection function pick-up element, the trip delay timer continues counting down as normal. Once the countdown reaches zero, if the pick-up element remains active and the second harmonic value has dropped, the function issues a trip.

Table. 4.5.4 - 178. Internal inrush harmonic blocking settings.

Name	Range	Step	Default	Description
Inrush harmonic blocking (internal-only trip)	• No • Yes	-	• No	Enables and disables the 2nd harmonic blocking.
2nd harmonic blocking limit (Iharm/Ifund)	0.10…50.00%I_{fund}	0.01%I_{fund}	0.01%I_{fund}	Defines the limit of the 2nd harmonic blocking.

Operating time characteristics for trip and reset

This function supports definite time delay (DT) and inverse definite minimum time delay (IDMT). For detailed information on these delay types please refer to the chapter "General properties of a protection function" and its section "Operating time characteristics".

Figure. 4.5.4 - 70. Typical operation time delays with different current to setting ratios in instant operation mode.

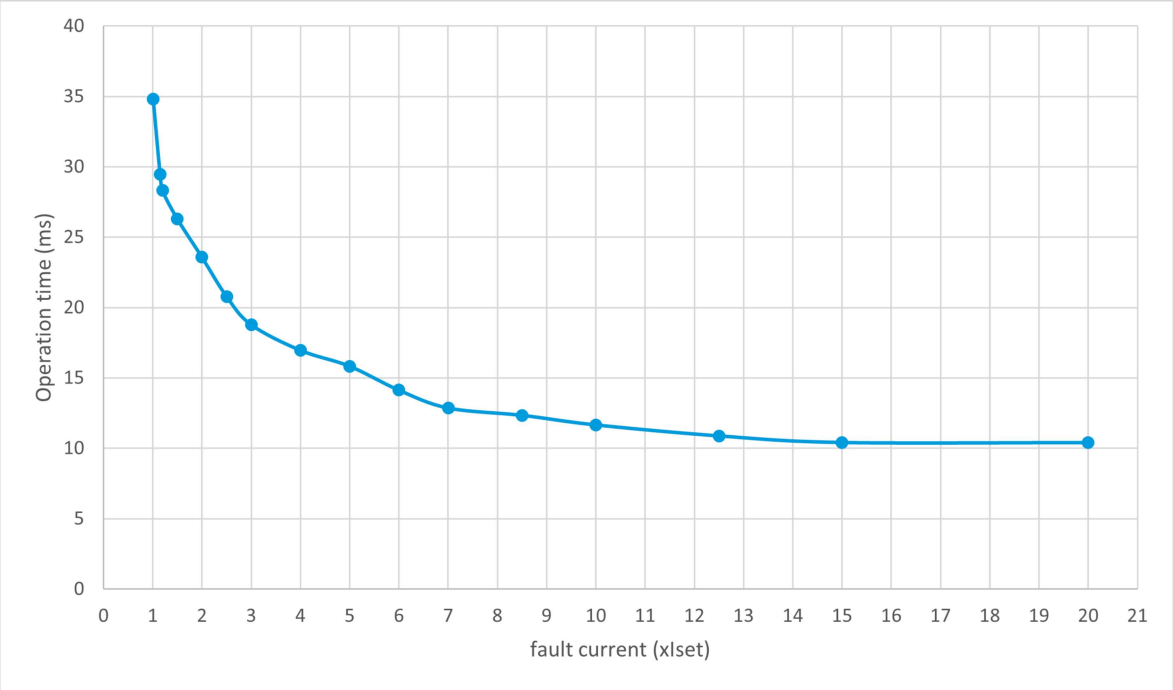

Events and registers

The non-directional overcurrent function (abbreviated "NOC" in event block names) generates events and registers from the status changes in the events listed below. The user can select which event messages are stored in the main event buffer: ON, OFF, or both. The events triggered by the function are recorded with a time stamp.

The function's output can be used for direct I/O controlling and user logic programming. The function also provides a resettable cumulative counter for the START, TRIP and BLOCKED events.

© Arcteq Relays Ltd
IM00099

Table. 4.5.4 - 179. Event messages.

Event block name	Event names
NOC1...NOC4	Start ON/OFF
NOC1...NOC4	Trip ON/OFF
NOC1...NOC4	Block ON/OFF
NOC1...NOC4	Phase A Start ON/OFF
NOC1...NOC4	Phase B Start ON/OFF
NOC1...NOC4	Phase C Start ON/OFF
NOC1...NOC4	Phase A Trip ON/OFF
NOC1...NOC4	Phase B Trip ON/OFF
NOC1...NOC4	Phase C Trip ON/OFF

The function registers its operation into the last twelve (12) time-stamped registers; this information is available for all provided instances separately. The register of the function records the ON event process data for START, TRIP or BLOCKED. The table below presents the structure of the function's register content.

Table. 4.5.4 - 180. Register content.

Name	Description
Date and time	dd.mm.yyyy hh:mm:ss.mss
Event	Event name
Fault type	L1-E…L1-L2-L3
Pre-trigger current	Start/Trip -20ms current
Fault current	Start/Trip current
Pre-fault current	Start -200ms current
Trip time remaining	0 ms...1800s
Setting group in use	Setting group 1...8 active.

4.5.5 Single-pole non-directional overcurrent protection (I>; 50/51)

The single-pole non-directional overcurrent function is used for instant and time-delayed overcurrent and short-circuit protection. The number of stages in the function depends on the device model. The operating decisions are based on phase current magnitude, constantly measured by the function.

Measured input

The function block uses phase current measurement values. The user can select the monitored magnitude to be equal either to RMS values (fundamental frequency component), to TRMS values from the whole harmonic specter of 32 components, or to peak-to-peak values.

Table. 4.5.5 - 181. Measurement inputs of the I> function.

Signal	Description
I_{L1}RMS	Fundamental frequency component of phase L1 (A) current measurement
I_{L2}RMS	Fundamental frequency component of phase L2 (B) current measurement
I_{L3}RMS	Fundamental frequency component of phase L3 (C) current measurement
I_{L1}TRMS	TRMS measurement of phase L1 (A) current
I_{L2}TRMS	TRMS measurement of phase L2 (B) current
I_{L3}TRMS	TRMS measurement of phase L3 (C) current
I_{L1}PP	Peak-to-peak measurement of phase L1 (A) current
I_{L2}PP	Peak-to-peak measurement of phase L2 (B) current
I_{L3}PP	Peak-to-peak measurement of phase L3 (C) current

General settings

The following general settings define the general behavior of the function. These settings are static i.e. it is not possible to change them by editing the setting group.

Table. 4.5.5 - 182. General settings of the function.

Name	Range	Default	Description
Setting control from comm bus	• Disabled • Allowed	Disabled	Activating this parameter allows changing the pick-up level of the protection stage via SCADA.
I> LN mode	• On • Blocked • Test • Test/ Blocked • Off	On	Set mode of NOC block. This parameter is visible only when *Allow setting of individual LN mode* is enabled in *General* menu.
IPW> force status to	• Normal • Start • Trip • Blocked • StartL1 • StartL2 • StartL3 • TripL1 • TripL2 • TripL3	Normal	Force the status of the function. Visible only when *Enable stage forcing* parameter is enabled in *General* menu.
Measured magnitude	• RMS • TRMS • Peak-to-peak	RMS	Defines which available measured magnitude is used by the function.

© Arcteq Relays Ltd

Name	Range	Default	Description
Measurement side	• Side 1 • Side 2 • Side 3	Side 1	Defines which current measurement module is used by the function.

Pick-up settings

The I_{set} setting parameter controls the pick-up of the I> function. This defines the maximum allowed measured current before action from the function. The function constantly calculates the ratio between the I_{set} and the measured magnitude (I_m) for each of the three phases. The reset ratio of 97 % is built into the function and is always relative to the I_{set} value. The setting value is common for all measured phases, and when the I_m exceeds the I_{set} value (in single, dual or all phases) it triggers the pick-up operation of the function.

Setting group selection controls the operating characteristics of the function, i.e. the user or user-defined logic can change function parameters while the function is running.

Table. 4.5.5 - 183. Pick-up settings.

Name	Range	Step	Default	Description
I_{set}	0.10…50.00×I_n	0.01×I_n	1.20×I_n	Pick-up setting

Read-only parameters

The function's *Info* page displays useful, real-time information on the state of the protection function. It is accessed either through the device's HMI display, or through the setting tool software when it is connected to the device and its Live Edit mode is active.

Table. 4.5.5 - 184. Information displayed by the function.

Name	Range	Step	Description
I> LN behaviour	• On • Blocked • Test • Test/Blocked • Off	-	Displays the mode of NOC block. This parameter is visible only when *Allow setting of individual LN mode* is enabled in *General* menu.
I> condition	• Normal • Start • Trip • Blocked	-	Displays status of the protection function.

Name	Range	Step	Description
I> phases condition	• Normal • Start A • Start B • Start C • Trip A • Trip B • Trip C • Start AB • Start BC • Start CA • Start ABC • Trip AB • Trip BC • Trip CA • Trip ABC	-	Displays the status of phases individually.
Expected operating time	-1800.000...1800.000s	0.005s	Displays the expected operating time when a fault occurs. When IDMT mode is used, the expected operating time depends on the measured highest phase current value. If the measured current changes during a fault, the expected operating time changes accordingly.
Time remaining to trip	0.000...1800.000s	0.005s	When the function has detected a fault and counts down time towards a trip, this displays how much time is left before tripping occurs.
I_{meas}/I_{set} at the moment	0.00...1250.00	0.01	The ratio between the highest measured phase current and the pick-up value.

Function blocking

The blocking signal is evaluated at the start of each program cycle. The blocking signals are connected to the function's dedicated input, which can be configured in the *IO → Blocking Input Control* tab of the function.

- When the pick-up element activates and the blocking signal is not active, a START signal is generated, and the function starts or continues with the trip time countdown.
- When the pick-up element activates and the blocking signal is active, a BLOCKED signal is generated, and the function does not process the event further.
- When a START signal is already active and the blocking input signal becomes active, the START signal is reset and BLOCKED signal is generated. The release time characteristics are then processed in the same way as when the pick-up signal is reset.

The blocking signal needs to reach the device minimum of 5 ms before the set operating delay has passed in order for the blocking to activate in time.

The function also offers an optional internal inrush harmonic blocking feature. If the inrush harmonic pick-up is active at the same time as the protection function pick-up element, the trip delay timer continues counting down as normal. Once the countdown reaches zero, if the pick-up element remains active and the second harmonic value has dropped, the function issues a trip.

© Arcteq Relays Ltd
IM00099

Table. 4.5.5 - 185. Internal inrush harmonic blocking settings.

Name	Range	Step	Default	Description
Inrush harmonic blocking (internal-only trip)	• No • Yes	-	• No	Enables and disables the 2nd harmonic blocking.
2nd harmonic blocking limit (Iharm/Ifund)	0.10…50.00%Ifund	0.01%Ifund	0.01%Ifund	Defines the limit of the 2nd harmonic blocking.

Operating time characteristics for trip and reset

This function supports definite time delay (DT) and inverse definite minimum time delay (IDMT). For detailed information on these delay types please refer to the chapter "General properties of a protection function" and its section "Operating time characteristics".

Events and registers

The non-directional overcurrent function (abbreviated "NOC" in event block names) generates events and registers from the status changes in the events listed below. The user can select which event messages are stored in the main event buffer: ON, OFF, or both. The events triggered by the function are recorded with a time stamp.

The function's outputs can be used for direct I/O controlling and user logic programming. The function also provides a resettable cumulative counter for the START, TRIP and BLOCKED events.

The function offers four (4) independent stages; the events are segregated for each stage operation.

Table. 4.5.5 - 186. Event messages.

Event block name	Event names
NOCS1	Start ON/OFF
NOCS1	Trip ON/OFF
NOCS1	Block ON/OFF
NOCS1	L1 Start ON/OFF
NOCS1	L2 Start ON/OFF
NOCS1	L3 Start ON/OFF
NOCS1	L1 Trip ON/OFF
NOCS1	L2 Trip ON/OFF
NOCS1	L3 Trip ON/OFF

The function registers its operation into the last twelve (12) time-stamped registers; this information is available for all provided instances separately. The register of the function records the ON event process data for START, TRIP or BLOCKED. The table below presents the structure of the function's register content.

Table. 4.5.5 - 187. Register content.

Name	Description
Date and time	dd.mm.yyyy hh:mm:ss.mss
Event	Event name
Fault type	L1-E…L1-L2-L3
Pre-trigger current	Start/Trip -20ms current
Fault current	Start/Trip current
Pre-fault current	Start -200ms current
Trip time remaining	0 ms...1800s
Setting group in use	Setting group 1...8 active.

4.5.6 Non-directional earth fault protection (I0>; 50N/51N)

The non-directional earth fault function is used for instant and time-delayed earth fault protection. The number of stages in the function depend on the device model. The operating characteristics are based on the selected neutral current magnitude which the function measures constantly.

Measured input

The function block uses residual current measurement values. The available analog measurement channels are I_{01} and I_{02} (residual current measurement) and I_{0Calc} (residual current calculated from phase current). The user can select the monitored magnitude to be equal either to RMS values (fundamental frequency component), to TRMS values from the whole harmonic specter of 32 components, or to peak-to-peak values.

Table. 4.5.6 - 188. Measurement inputs of the I0> function.

Signal	Description
I_{01}RMS	Fundamental frequency component of coarse residual current measurement input I01
I_{01}TRMS	TRMS measurement of coarse residual current measurement input I01
I_{01}PP	Peak-to-peak measurement of coarse residual current measurement input I01
I_{02}RMS	Fundamental frequency component of sensitive residual current measurement input I02
I_{02}TRMS	TRMS measurement of coarse sensitive current measurement input I02
I_{02}PP	Peak-to-peak measurement of sensitive residual current measurement input I02
I_{0Calc}	Fundamental frequency component of the calculated zero sequence current calculated from the three phase currents

General settings

The following general settings define the general behavior of the function. These settings are static i.e. it is not possible to change them by editing the setting group.

© Arcteq Relays Ltd

Table. 4.5.6 - 189. General settings of the function.

Name	Range	Default	Description
Setting control from comm bus	• Disabled • Allowed	Disabled	Activating this parameter permits changing the pick-up level of the protection stage via SCADA.
I0> LN mode	• On • Blocked • Test • Test/ Blocked • Off	On	Set mode of NEF block. This parameter is visible only when Allow setting of individual LN mode is enabled in General menu.
I0> force status to	• Normal • Start • Trip • Blocked	Normal	Force the status of the function. Visible only when *Enable stage forcing* parameter is enabled in *General* menu.
Measured magnitude	• RMS • TRMS • Peak-to-peak	RMS	Defines which available measured magnitude is used by the function. This parameter is available when "Input selection" has been set to "I01" or "I02".
Measurement side	• Side 1 • Side 2 • Side 3	Side 1	Defines which current measurement module is used by the function.
Input selection	• I01 • I02 • I0Calc	I01	Defines which measured residual current is used by the function.

Pick-up settings

The $I0_{set}$ setting parameter controls the the pick-up of the I0> function. This defines the maximum allowed measured current before action from the function. The function constantly calculates the ratio between the $I0_{set}$ and the measured magnitude (I_m) for each of the three phases. The reset ratio of 97 % is built into the function and is always relative to the $I0_{set}$ value. The setting value is common for all measured phases. When the I_m exceeds the $I0_{set}$ value (in single, dual or all phases) it triggers the pick-up operation of the function.

Setting group selection controls the operating characteristics of the function, i.e. the user or user-defined logic can change function parameters while the function is running.

Table. 4.5.6 - 190. Pick-up settings.

Name	Range	Step	Default	Description
$I0_{set}$	0.0001…40.00 × I_n	0.0001 × I_n	1.20 × I_n	Pick-up setting

Read-only parameters

The function's *Info* page displays useful, real-time information on the state of the protection function. It is accessed either through the device's HMI display, or through the setting tool software when it is connected to the device and its Live Edit mode is active.

Table. 4.5.6 - 191. Information displayed by the function.

Name	Range	Step	Description
I0> LN behaviour	• On • Blocked • Test • Test/Blocked • Off	-	Displays the mode of NEF block. This parameter is visible only when *Allow setting of individual LN mode* is enabled in *General* menu.
I0> condition	• Normal • Start • Trip • Blocked	-	Displays status of the protection function.
Detected I0 angle	-360.00...360.00 deg	0.01 deg	Angle of I0 against reference. If phase voltages are available, positive sequence voltage angle is used as reference. If voltages are not available, positive sequence current angle is used as reference.
Detected fault type	• - • A-G-R • B-G-F • C-G-R • A-G-F • B-G-R • C-G-F	-	Displays the detected fault type and direction of previous fault. "A/B/C" stand for one of the three phases. "G" stands for "ground". "F" stands for "forward" direction and "R" stands for "reverse" direction.
Expected operating time	-1800.000...1800.000 s	0.005 s	Displays the expected operating time when a fault occurs. When IDMT mode is used, the expected operating time depends on the measured current value. If the measured current changes during a fault, the expected operating time changes accordingly.
Time remaining to trip	0.000...1800.000 s	0.005 s	When the function has detected a fault and counts down time towards a trip, this displays how much time is left before tripping occurs.
I_{meas}/I_{set} at the moment	0.00...1250.00	0.01	The ratio between the measured current and the pick-up value.

Function blocking

The blocking signal is evaluated at the start of each program cycle. The blocking signals are connected to the function's dedicated input, which can be configured in the *IO → Blocking Input Control* tab of the function.

- When the pick-up element activates and the blocking signal is not active, a START signal is generated, and the function starts or continues with the trip time countdown.
- When the pick-up element activates and the blocking signal is active, a BLOCKED signal is generated, and the function does not process the event further.
- When a START signal is already active and the blocking input signal becomes active, the START signal is reset and BLOCKED signal is generated. The release time characteristics are then processed in the same way as when the pick-up signal is reset.

The blocking signal needs to reach the device minimum of 5 ms before the set operating delay has passed in order for the blocking to activate in time.

© Arcteq Relays Ltd

The function also offers an optional internal inrush harmonic blocking feature. If the inrush harmonic pick-up is active at the same time as the protection function pick-up element, the trip delay timer continues counting down as normal. Once the countdown reaches zero, if the pick-up element remains active and the second harmonic value has dropped, the function issues a trip.

Table. 4.5.6 - 192. Internal inrush harmonic blocking settings.

Name	Range	Step	Default	Description
Inrush harmonic blocking (internal-only trip)	• No • Yes	-	• No	Enables and disables the 2nd harmonic blocking.
2nd harmonic blocking limit (Iharm/Ifund)	0.10…50.00%I_{fund}	0.01%I_{fund}	0.01%I_{fund}	Defines the limit of the 2nd harmonic blocking.

Operating time characteristics for trip and reset

This function supports definite time delay (DT) and inverse definite minimum time delay (IDMT). For detailed information on these delay types please refer to the chapter "General properties of a protection function" and its section "Operating time characteristics".

Events and registers

The non-directional earth fault function (abbreviated "NEF" in event block names) generates events and registers from the status changes in the events listed below. The user can select which event messages are stored in the main event buffer: ON, OFF, or both. The events triggered by the function are recorded with a time stamp.

The function's outputs can be used for direct I/O controlling and user logic programming. The function also provides a resettable cumulative counter for the START, TRIP and BLOCKED events.

The function offers four (4) independent stages; the events are segregated for each stage operation.

Table. 4.5.6 - 193. Event messages.

Event block name	Event names
NEF1...NEF4	Start ON/OFF
NEF1...NEF4	Trip ON/OFF
NEF1...NEF4	Block ON/OFF

The function registers its operation into the last twelve (12) time-stamped registers. The register of the function records the ON event process data for START, TRIP or BLOCKED. The table below presents the structure of the function's register content.

Table. 4.5.6 - 194. Register content.

Name	Description
Date and time	dd.mm.yyyy hh:mm:ss.mss
Event	Event name
Fault type	A-G-R…C-G-F

Name	Description
Pre-trigger current	Start/Trip -20ms current
Fault current	Start/Trip current
Pre-fault current	Start -200ms current
Trip time remaining	0 ms...1800s
Setting group in use	Setting group 1...8 active.

4.5.7 Directional overcurrent protection (Idir>; 67)

The directional overcurrent function is used for instant and time-delayed overcurrent and short-circuits. A device with both voltage and current protection modules can have four (4) available stages of the function (Idir>, Idir>>, Idir>>>, Idir>>>>). The operating decisions are based on phase current magnitudes which the function constantly measures.

Measured input

The function block uses phase current and voltage measurement values. The user can select the monitored current magnitude to be equal either to RMS values (fundamental frequency component), to TRMS values from the whole harmonic specter of 32 components, or to peak-to-peak values.

The fault current angle is based on the comparison between the positive sequence voltage U_1 and the positive sequence current I_1. If the positive sequence voltage is not available (three line-to-line voltages but no U_0), the voltage angle is based on a faulty phase line-to-line voltage. If the voltage drops below 1 V in the secondary side during a fault, the voltage memory is used for 0.5 seconds. After that the reference angle of voltage is forced to 0°.

Table. 4.5.7 - 195. Measurement inputs of the Idir> function.

Signal	Description
I_{L1}RMS	Fundamental frequency component of phase L1 (A) current measurement
I_{L2}RMS	Fundamental frequency component of phase L2 (B) current measurement
I_{L3}RMS	Fundamental frequency component of phase L3 (C) current measurement
I_{L1}TRMS	TRMS measurement of phase L1 (A) current
I_{L2}TRMS	TRMS measurement of phase L2 (B) current
I_{L3}TRMS	TRMS measurement of phase L3 (C) current
I_{L1}PP	Peak-to-peak measurement of phase L1 (A) current
I_{L2}PP	Peak-to-peak measurement of phase L2 (B) current
I_{L3}PP	Peak-to-peak measurement of phase L3 (C) current
U_1RMS	Fundamental frequency component of U_1/V voltage measurement
U_2RMS	Fundamental frequency component of U_2/V voltage measurement
U_3RMS	Fundamental frequency component of U_3/V voltage measurement

© Arcteq Relays Ltd

Signal	Description
U_4RMS	Fundamental frequency component of U_4/V voltage measurement

General settings

The following general settings define the general behavior of the function. These settings are static i.e. it is not possible to change them by editing the setting group.

Table. 4.5.7 - 196. General settings of the function.

Name	Range	Default	Description
Idir> LN mode	• On • Blocked • Test • Test/ Blocked • Off	On	Set mode of DOC block. This parameter is visible only when *Allow setting of individual LN mode* is enabled in *General* menu.
Idir> force status to	• Normal • Start • Trip • Blocked	Normal	Force the status of the function. Visible only when *Enable stage forcing* parameter is enabled in *General* menu.
Measured magnitude	• RMS • TRMS • Peak-to-peak	RMS	Defines which available measured magnitude is used by the function.
Measurement side	• Side 1 • Side 2 • Side 3	Side 1	Defines which current measurement module is used by the function. Visible if the unit has more than one current measurement module.

Pick-up settings

The I_{set} setting parameter controls the pick-up of the I> function. This defines the maximum allowed measured current before action from the function. The function constantly calculates the ratio between the I_{set} and the measured magnitude (I_m) for each of the three phases. The reset ratio of 97 % is built into the function and is always relative to the I_{set} value. The setting value is common for all measured phases, and when the I_m exceeds the I_{set} value (in single, dual or all phases) it triggers the pick-up operation of the function.

The trip characteristic can be set to directional or non-directional. In the non-directional mode only the pick-up value of the positive sequence current magnitude must be fulfilled in order for the function to trip. In the directional mode the fault must also be in the monitored direction to fulfill the terms to trip. By default, the tripping area is ±88° (176°). The reference angle is based on the calculated positive sequence voltage U_1 angle. If the U_1voltage is not available and only line-to-line voltages are measured, the reference angle is based on a healthy line-to-line voltage. During a short-circuit the reference angle is based on impedance calculation.

If the voltage drops below 1 V in the secondary side, the angle memory is used for 0.5 seconds. The angle memory forces the reference angle to be equal to the value measured or calculated before the fault. The angle memory captures the measured voltage angle 100 ms before the fault starts. After 0.5 seconds the angle memory is no longer used, and the reference angle is forced to 0°. The inbuilt reset ratio for the tripping area angle is 2°.

Setting group selection controls the operating characteristics of the function, i.e. the user or user-defined logic can change function parameters while the function is running.

Table. 4.5.7 - 197. Pick-up settings.

Name	Range	Step	Default	Description
Characteristic direction	• Directional • Non-directional	-	Directional	Switches between directional and non-directional overcurrent mode.
Operating sector size (+ / -)	±1.0…170.0°	0.1°	±88°	Pick-up area size in degrees.
Operating sector center	-180.0…180.0°	0.1°	0°	Turns the operating sector
Pick-up setting I_{set}	0.10…40.00×I_n	0.01×I_n	1.20×I_n	Pick-up setting

Figure. 4.5.7 - 71. Angle tracking of the Idir> function (3LN/3LL + U_0 mode).

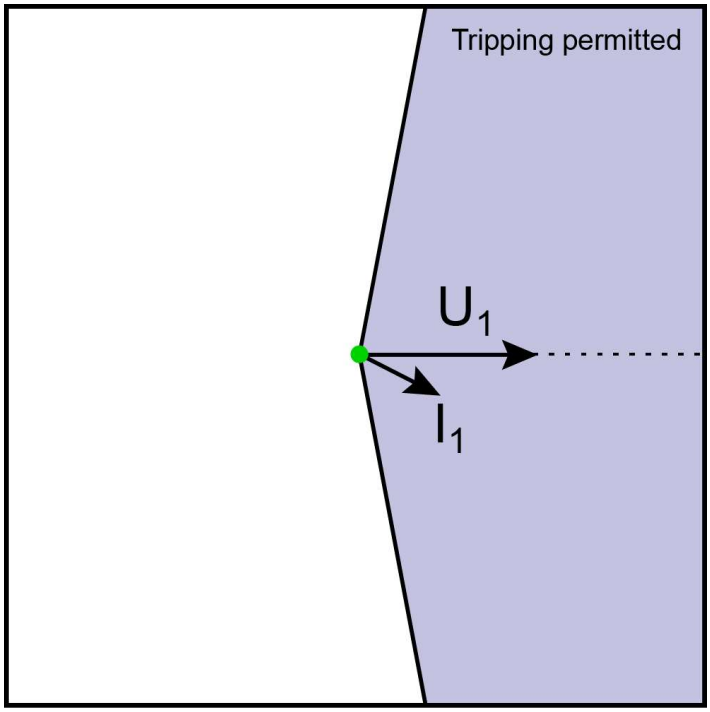

Please note in the picture above that the tripping area is linked to the angle of the positive sequence voltage U_1. The angle of the positive sequence current I_1 is compared to U_1 angle, and if the fault is in the correct direction, it is possible to perform a trip when the amplitude of I_{L1}, I_{L2} or I_{L3} increases above the pick-up limit.

If the 3LL mode is used without the U_0 measurement in a single-phase fault situation, the voltage reference comes from the healthy phase and the current reference from the faulty phase. In a short-circuit the angle comes from impedance calculation.

© Arcteq Relays Ltd

Figure. 4.5.7 - 72. Operation sector area when the sector center has been set to -45 degrees.

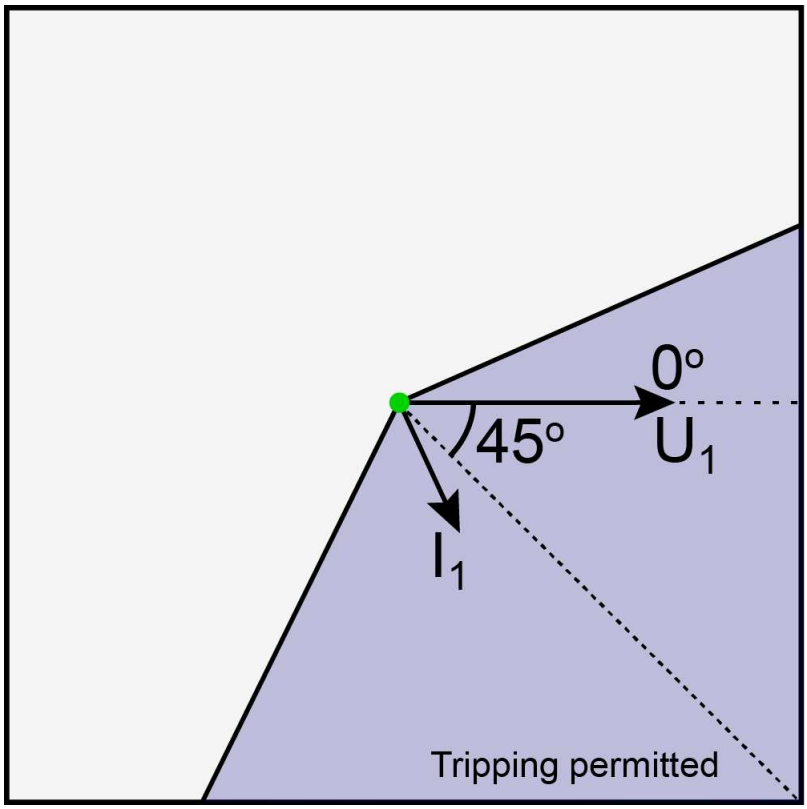

Figure. 4.5.7 - 73. When Idir> function has been set to "Non-directional" the function works basically just like a traditional non-directional overcurrent protection function.

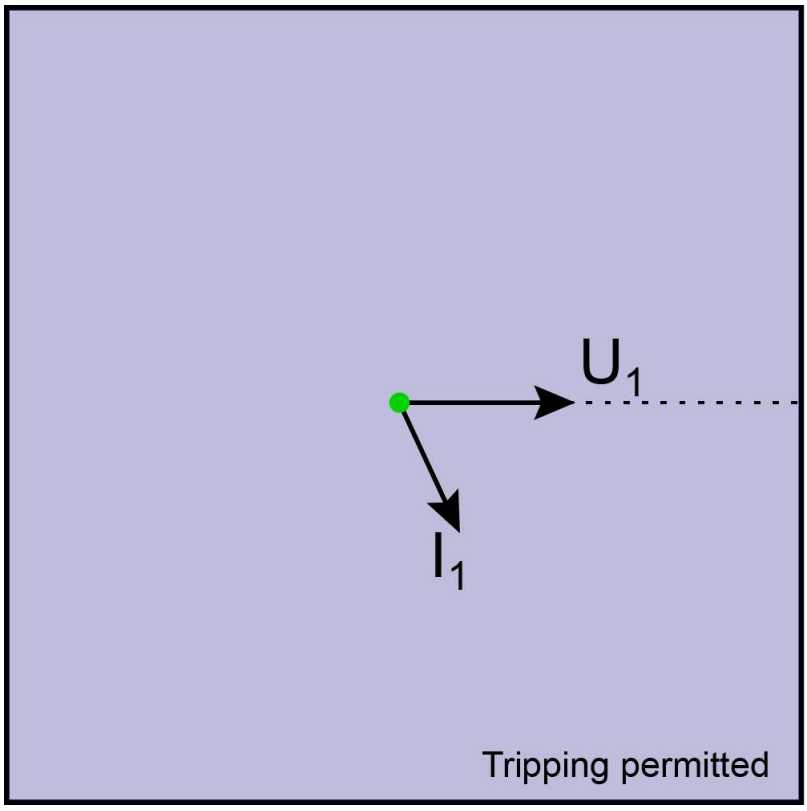

Read-only parameters

The function's *Info* page displays useful, real-time information on the state of the protection function. It is accessed either through the device's HMI display, or through the setting tool software when it is connected to the device and its Live Edit mode is active.

Table. 4.5.7 - 198. Information displayed by the function.

Name	Range	Step	Description
Idir> LN behaviour	• On • Blocked • Test • Test/Blocked • Off	-	Displays the mode of DOC block. This parameter is visible only when *Allow setting of individual LN mode* is enabled in *General* menu.
Operating angle now	-360.00...360.00deg	0.01deg	The positive sequence current angle in relation to the positive sequence voltage.
Expected operating time	0.000...1800.00s	0.005s	Displays the expected operating time when a fault occurs. When IDMT mode is used, the expected operating time depends on the highest measured phase current value. If the measured current changes during a fault, the expected operating time changes accordingly.
Time remaining to trip	-1800.000...1800.00s	0.005s	When the function has detected a fault and counts down time towards a trip, this displays how much time is left before tripping occurs.
I_{meas}/I_{set} at the moment	0.00...1250.00I_m/I_{set}	0.01I_m/I_{set}	The ratio between the highest measured phase current and the pick-up value.

Function blocking

The blocking signal is evaluated at the start of each program cycle. The blocking signals are connected to the function's dedicated input, which can be configured in the *IO → Blocking Input Control* tab of the function.

- When the pick-up element activates and the blocking signal is not active, a START signal is generated, and the function starts or continues with the trip time countdown.
- When the pick-up element activates and the blocking signal is active, a BLOCKED signal is generated, and the function does not process the event further.
- When a START signal is already active and the blocking input signal becomes active, the START signal is reset and BLOCKED signal is generated. The release time characteristics are then processed in the same way as when the pick-up signal is reset.

The blocking signal needs to reach the device minimum of 5 ms before the set operating delay has passed in order for the blocking to activate in time.

The function also offers an optional internal inrush harmonic blocking feature. If the inrush harmonic pick-up is active at the same time as the protection function pick-up element, the trip delay timer continues counting down as normal. Once the countdown reaches zero, if the pick-up element remains active and the second harmonic value has dropped, the function issues a trip.

© Arcteq Relays Ltd
IM00099

Table. 4.5.7 - 199. Internal inrush harmonic blocking settings.

Name	Range	Step	Default	Description
Inrush harmonic blocking (internal-only trip)	• No • Yes	-	• No	Enables and disables the 2nd harmonic blocking.
2nd harmonic blocking limit (Iharm/Ifund)	0.10…50.00%Ifund	0.01%Ifund	0.01%Ifund	Defines the limit of the 2nd harmonic blocking.

Operating time characteristics for trip and reset

This function supports definite time delay (DT) and inverse definite minimum time delay (IDMT). For detailed information on these delay types please refer to the chapter "General properties of a protection function" and its section "Operating time characteristics".

Events and registers

The directional overcurrent function (abbreviated "DOC" in event block names) generates events and registers from the status changes in the events listed below. The user can select which event messages are stored in the main event buffer: ON, OFF, or both. The events triggered by the function are recorded with a time stamp.

The function's outputs can be used for direct I/O controlling and user logic programming. The function also provides a resettable cumulative counter for the START, TRIP and BLOCKED events.

The function offers four (4) independent stages; the events are segregated for each stage operation.

Table. 4.5.7 - 200. Event messages.

Event block name	Event names
DOC1...DOC4	Start ON/OFF
DOC1...DOC4	Trip ON/OFF
DOC1...DOC4	Block ON/OFF
DOC1...DOC4	No voltage, Blocking ON/OFF
DOC1...DOC4	Measuring live angle ON/OFF
DOC1...DOC4	Using voltmem ON/OFF

The function registers its operation into the last twelve (12) time-stamped registers; this information is available for all provided instances separately. The register of the function records the ON event process data for START, TRIP or BLOCKED. The table below presents the structure of the function's register content.

Table. 4.5.7 - 201. Register content.

Register name	Description
Date and time	dd.mm.yyyy hh:mm:ss.mss
Event	Event name

Register name	Description
Fault type	L1-E...L1-L2-L3
Pre-trigger current	Start/Trip -20ms current
Fault current	Start/Trip current
Pre-fault current	Start -200ms averages
Trip time remaining	0s...1800s
Setting group in use	Setting group 1...8 active
Operating angle	0...250°

4.5.8 Directional earth fault protection (I0dir>; 67N/32N)

The directional earth fault function is used for instant and time-delayed earth fault protection. A device with both voltage and current protection modules can have four (4) stages in the function (I0dir>, I0dir>>, I0dir>>>, I0dir>>>>). The operating decisions are based on selected neutral current and voltage magnitudes which the function constantly measures.

Measured input

The function block uses residual current measurement values and neutral voltage measurement values. The available residual current measurement channels are I_{01} and I_{02} (residual current measurement) and I0Calc (residual current calculated from phase current).The user can select the monitored current magnitude to be equal either to RMS values (fundamental frequency component), to TRMS values from the whole harmonic specter of 32 components, or to peak-to-peak values.

The fault current angle is based on comparing the neutral voltage U_0 angle to the residual current I_0 angle. Both I_0 and U_0 must be above the squelch limit to be able to detect the angle. The squelch limit for the I_0 current is 0.01 x I_n and for the U_0 voltage 0.01 x U_n.

Table. 4.5.8 - 202. Measurement inputs of the I0dir> function.

Signal	Description
I_{01}RMS	Fundamental frequency component of coarse residual current measurement input I01
I_{01}TRMS	TRMS measurement of coarse residual current measurement input I01
I_{01}PP	Peak-to-peak measurement of coarse residual current measurement input I01
I_{02}RMS	Fundamental frequency component of sensitive residual current measurement input I02
I_{02}TRMS	TRMS measurement of coarse sensitive current measurement input I02
I_{02}PP	Peak-to-peak measurement of sensitive residual current measurement input I02
I_{0Calc}	Fundamental frequency component of residual current calculated from the three phase currents
U_0RMS	Fundamental frequency component of zero sequence voltage measurement input U0
U_{0Calc}	Fundamental frequency component of of the zero sequence voltage calculated from the three phase voltages

© Arcteq Relays Ltd

General settings

The following general settings define the general behavior of the function. These settings are static i.e. it is not possible to change them by editing the setting group.

Table. 4.5.8 - 203. General settings of the function.

Name	Range	Default	Description
I0dir> LN mode	On Blocked Test Test/Blocked Off	On	Set mode of DEF block. This parameter is visible only when *Allow setting of individual LN mode* is enabled in *General* menu.
I0dir> force status to	• Normal • Start • Trip • Blocked • Unearthed Start • Unearthed Trip • Compensated Start • Compensated Trip	Normal	Force the status of the function. Visible only when *Enable stage forcing* parameter is enabled in *General* menu.
U0 directional reference	• U0 • -U0	U0	If the connected neutral voltage polarity is opposite to the connected residual current, this parameter can swap the angle reference.
U0> Meas input select	• Select • U0 Calculated • U3 Input • U4 Input	Select	Defines which available neutral voltage measurement is used. Available neutral voltages depend on measurement settings (*Measurements → Transformers → VT module*).
Measured magnitude	• RMS • TRMS • Peak-to-peak	RMS	Defines which available measured magnitude is used by the function. This parameter is available when "Input selection" has been set to "I01" or "I02".
Measurement side	• Side 1 • Side 2 • Side 3	Side 1	Defines which current measurement module is used by the function.
Input selection	• I01 • I02 • I0Calc	I01	Defines which measured residual current is used by the function.

Pick-up settings

The the pick-up of the I0dir> function is controlled by the $I0_{set}$ setting parameter and the $U0_{set}$ setting parameter. The former defines the maximum allowed measured current, while the latter defines the maximum allowed measured voltage and checks the angle difference before action from the function. The function constantly calculates the ratio between the $I0_{set}$ and the $U0_{set}$ and the measured magnitudes ($I_m$and U_m). The reset ratio of 97 % is built into the function and is always relative to the $I0_{set}$ (or $U0_{set}$) value. When the I_m exceeds the $I0_{set}$ value it triggers the pick-up operation of the function.

Setting group selection controls the operating characteristics of the function, i.e. the user or user-defined logic can change function parameters while the function is running.

Table. 4.5.8 - 204. Pick-up settings.

Name	Range	Step	Default	Description
Grounding type	• Unearthed [32N Var] • Petersen coil GND [32N Watt] • Grounded [67N] • $I0_{Cos}$ & $I0_{Sin}$ broad range with MCD [32N Var/ Watt]	-	Unearthed	Network grounding method
Pick-up setting $I0_{set}$>	0.005…40.00×I_n	0.001×I_n	1.20×I_n	Current pick-up setting. If broadrange mode is selected, unearthed and compensated networks have separate pick-up settings.
Comp. pick-up setting $I0_{set}$ (I0Cosfi)>				
Unearth. pick-up setting $I0_{set}$ (I0Sinfi)>				
Pick-up setting $U0_{set}$>	1…75%U_n	0.01%U_n	20%U_n	Voltage pick-up setting. If broadrange mode is selected, unearthed and compensated networks have separate pick-up settings.
Comp. pick-up setting $U0_{set}$ (I0Cosfi)>				
Unearth. pick-up setting $U0_{set}$ (I0Sinfi)>				
Multi-criteria detection	• Not used • Used	-	Not used	Activation of detecting healthy or unhealthy feeder by analyzing symmetrical components of currents and voltages. Visible when broadrange mode is used.
Unearthed/ Compensated border angle	-45.0…90°	0.1°	45°	Dividing the angle between unearthed and compensated tripping (see description later in this document). Visible when earthing type is set to $I0_{Cos}$ & $I0_{Sin}$ broad range mode.
Resistive (I0Cosfi) mode I0 angle blinder.	-90.0…0.0°	0.1°	-90°	I0 angle blinder. Used in broadrange and Petersen coil grounded mode. Not in use when set to zero.
Tripping area size (+ / -)	±45.0…135.0°	0.1°	±88°	Defines the tripping area sector size in grounded network mode.
Tripping area center	-360.00…360.00	0.1°	0.0°	Turns the tripping area in grounded network mode.

© Arcteq Relays Ltd

Unearthed network

Figure. 4.5.8 - 74. Angle tracking of I0dir> function (unearthed network model) (32N)

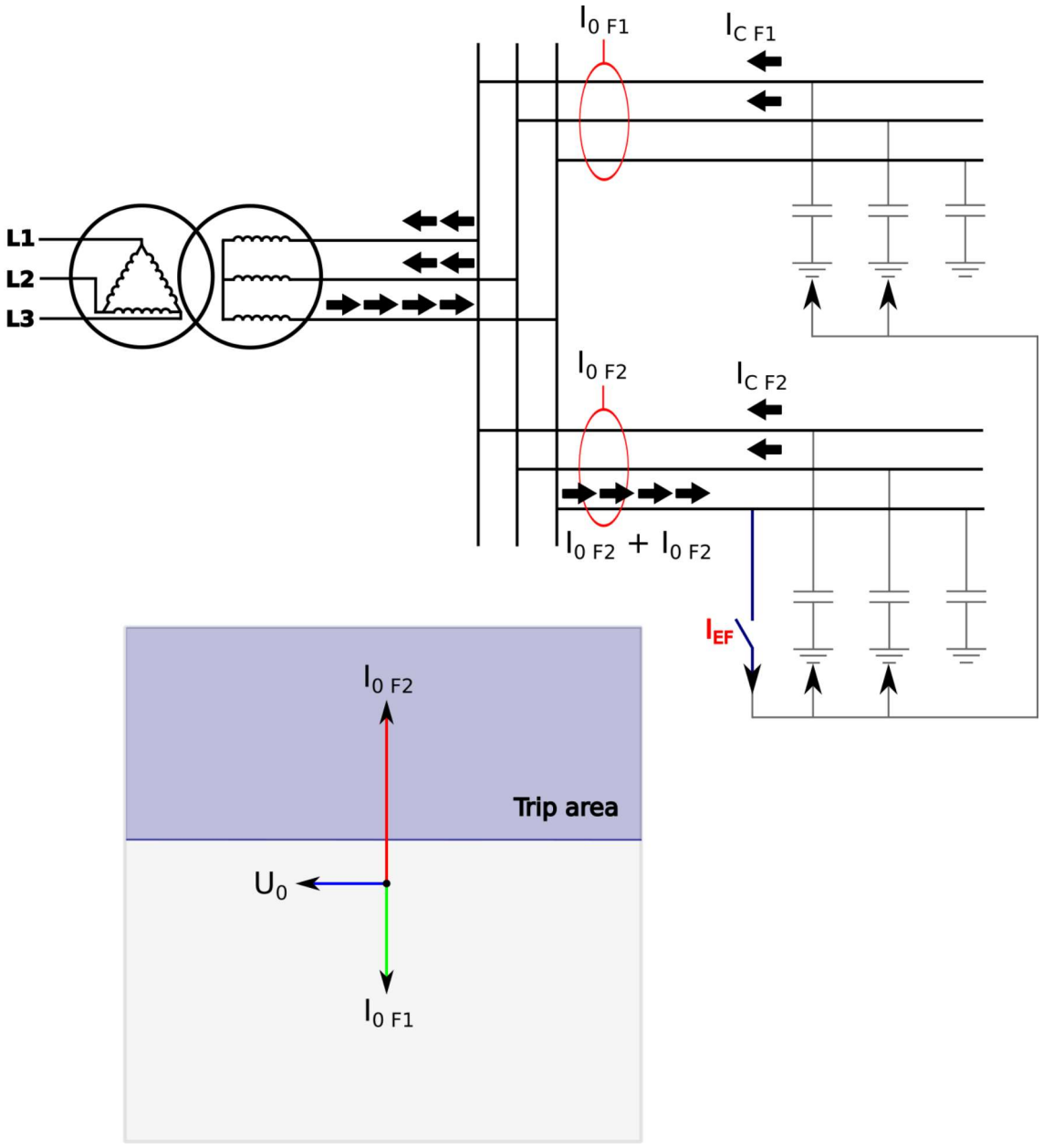

When the unearthed (capacitive) network mode is chosen, the function expects the fault current to be lagging zero sequence voltage by 90 degrees. Healthy phases of healthy feeders produce capacitive current during earth fault just like a faulty feeder but the current is floating towards the busbar and through an incoming feeder transformer or a earthing transformer and into a faulty feeder. Healthy feeders do not trip since capacitive current is floating to the opposite direction and selective tripping can be ensured.

The amplitude of the fault current depends on the capacitance of the network. The outgoing feeders are the sources for capacitive currents. The bigger the network the greater the capacitive current during a fault. Each outgoing feeder produces capacitance according to the zero sequence capacitive reactance of the line (ohms per kilometer). It is normal that in cable networks fault currents are higher than in overhead lines.

The resistance of the fault affects the size of the voltage drop during a fault. In direct earth fault the zero sequence voltage amplitude is equal to the system's line-to-earth voltage. In direct earth fault the voltage of a faulty phase drops close to zero and healthy phase voltages increase to the amplitude of line-to-line voltages.

Petersen coil earthed (Compensated) network (32N)

There are many benefits to a Petersen coil earthed network. The amount of automatic reclosing is highly decreased and the maintenance of the breakers is therefore diminished. Arc faults die on their own, and cables and equipment suffer less damage. In emergency situations a line with an earth fault can be used for a specific time.

Figure. 4.5.8 - 75. Angle tracking of I0dir> function (Petersen coil earthed network model).

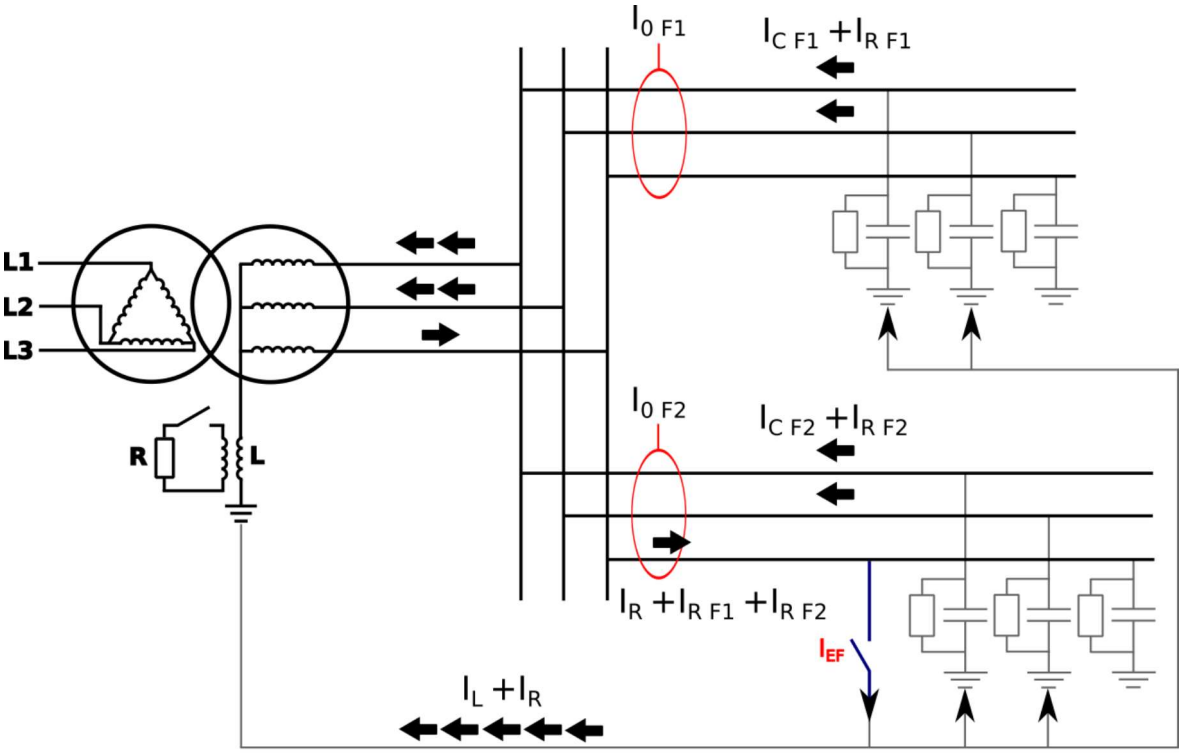

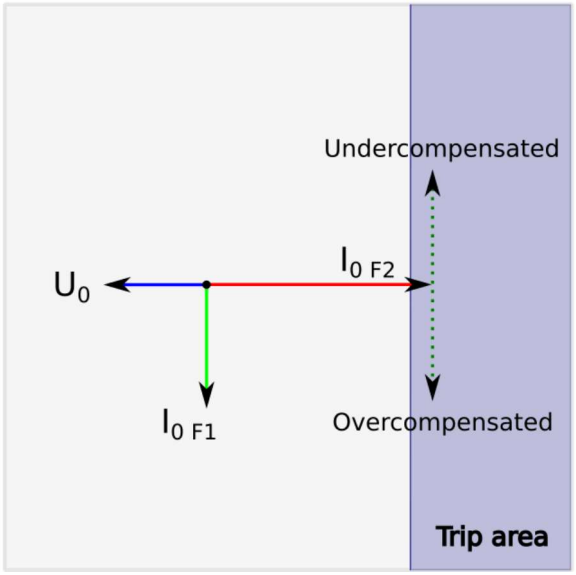

© Arcteq Relays Ltd

When the Petersen coil earthed (compensated) network mode is chosen, the function expects the fault current to be in the opposite direction to the zero sequence voltage. Healthy phases of both healthy and faulty feeders produce a capacitive current similar to the unearthed network. The inductance of the Petersen coil compensates the capacitive current and therefore the residual current in a fault location is close to zero. The size of the inductance is chosen according to the prospective earth fault current of the network. The desired compensation grade is achieved when the K factor is close to 1.0 and the network is fully compensated. The network is overcompensated when the K factor is greater than 1.0, and undercompensated when the K factor is smaller than 1.0.

The inductance connected to the star point of an incoming feeder transformer or -as in most cases- to a earthing transformer compensates the capacitance of the network; however, this prevents the capacitive fault current to be measured. The fault detection is handled by connecting the resistance in parallel with the inductance. This resistance includes the amplitude of the fault current. In undercompensated or overcompensated situations the resistive component does not change during the fault; therefore, selective tripping is ensured even when the network is slightly undercompensated or overcompensated.

Directly earthed or small impedance network (67N)

Figure. 4.5.8 - 76. Angle tracking of I0dir> function (directly earthed or small impedance network).

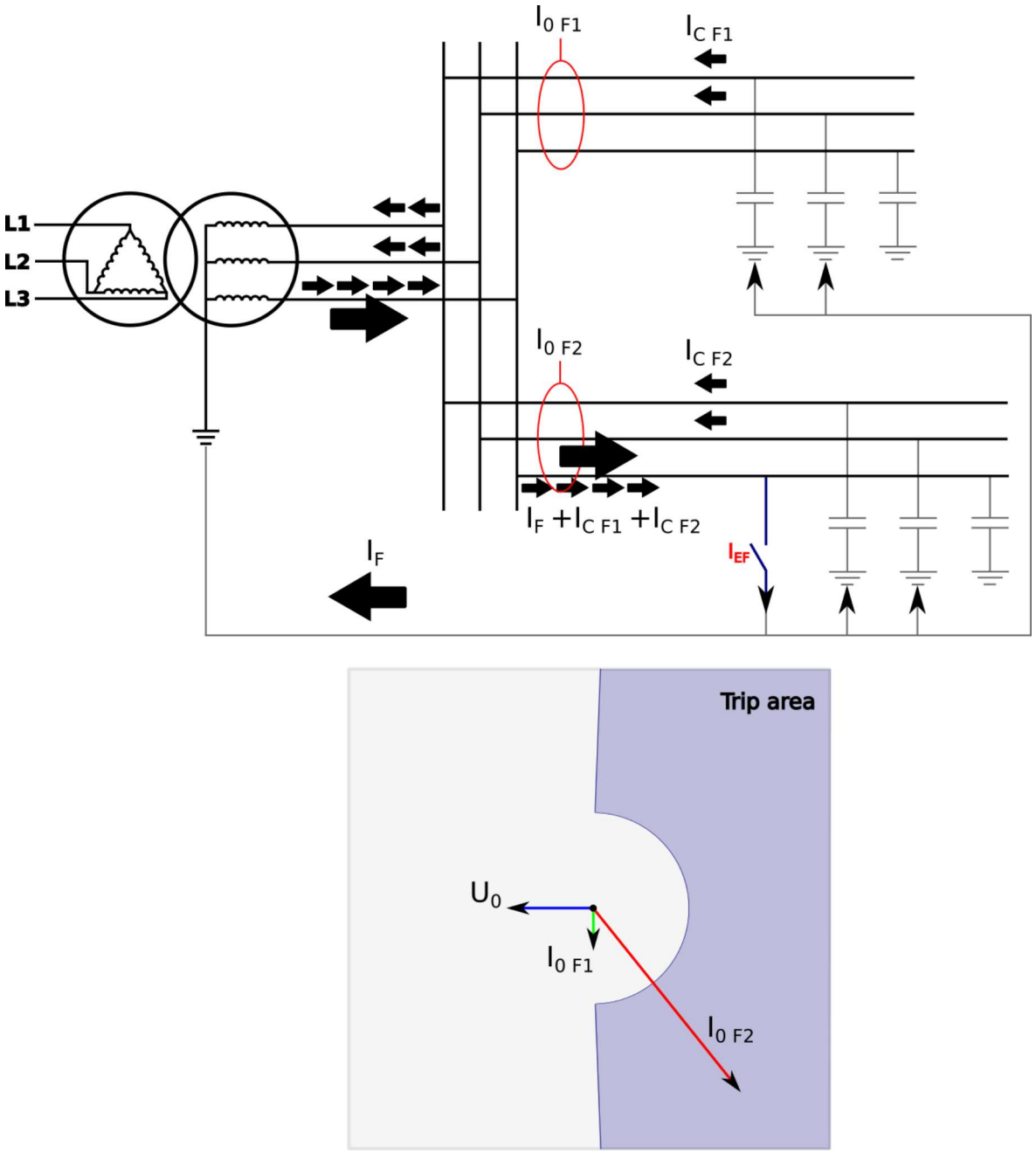

In a directly earthed network the amplitude of a single-phase fault current is similar to the amplitude of a short-circuit current. Directly earthed or small impedance network schemes are normal in transmission, distribution and industry.

The phase angle setting of the tripping area is adjustable as is the base direction of the area (angle offset).

© Arcteq Relays Ltd

Broad range mode with multi-criteria detection for unearthed and compensated networks

When detecting earth faults in compensated long-distance cables and overhead lines, it is in some cases difficult to distinguish between a healthy and a faulty feeder. Merely measuring the angle and the magnitude of residual voltage and currents is not always enough, as changes in symmetrical components of phase currents and voltages are also needed. Additionally, when protecting feeders from earth faults, two modes are used depending on the network status (unearthed or compensated). When changing between these two statuses the setting group must be changed, and especially with distributed compensation the change may be difficult or impossible to arrange. Finally, in a compensated network protection relays with traditional algorithms may sporadically detect an earth fault in a long healthy feeder due to CT errors. For all these reasons, Arcteq has developed an improved alternative to these traditional directional earth fault protections.

Figure. 4.5.8 - 77. Angle tracking of the I0dir> function (broad range mode).

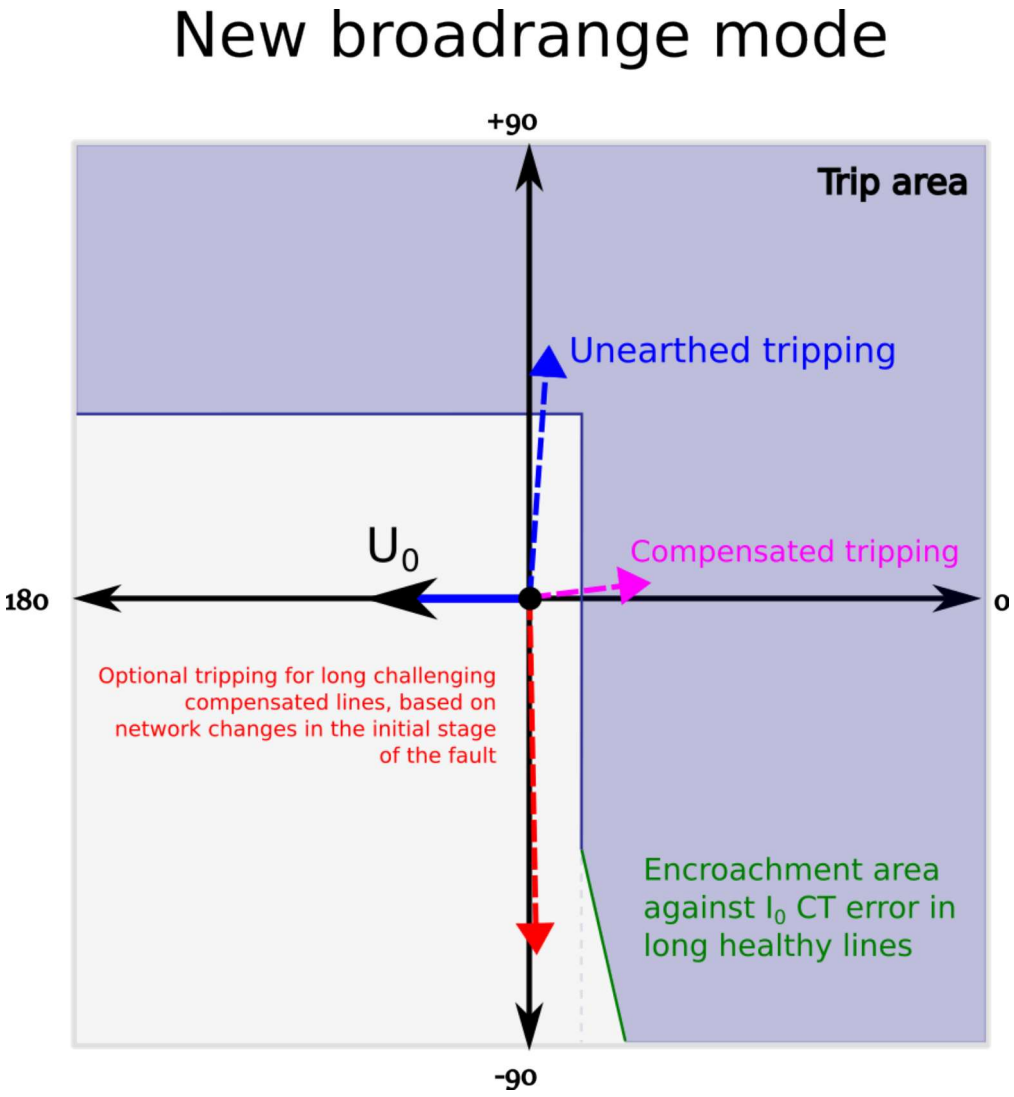

The new broad range mode is capable of detecting an earth fault directionally in both unearthed and compensated networks not only by combining the two stages together but by using a new multi-criteria detection. This optional additional tripping condition for compensated networks uses Arcteq's patented, high-resolution intermittent earth fault algorithm with added symmetrical component calculation of phase currents and voltages. If this mode is activated, the alarming criteria is comprised of a measured residual current in the fourth quadrant and the symmetrical components of voltages and currents detecting a fault. No extra parameterization is required compared to the traditional method. The multi-criteria algorithm can be tested with COMTRADE files supplied by Arcteq. The function requires a connection of three-phase currents, residual current and residual voltage to operate correctly.

To avoid unnecessary alarms the user can add an encroachment area against I0 CT errors in compensated long healthy lines.

Figure. 4.5.8 - 78. Effect of angle divider when in use and when disabled.

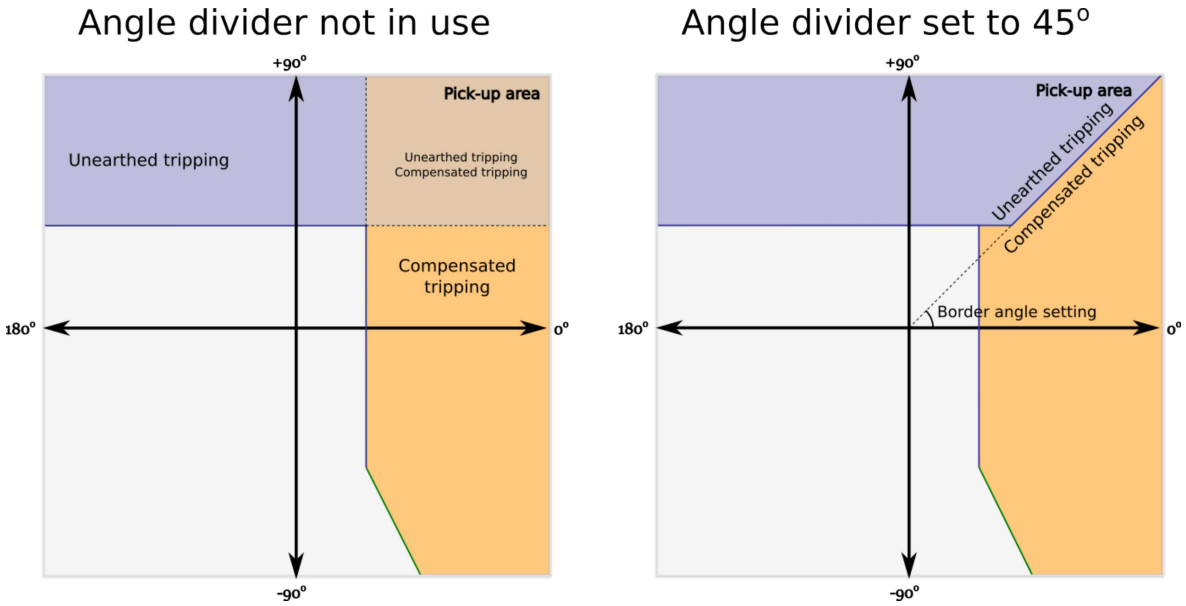

To receive a more accurate indication as to whether the fault was in a compensated or an unearthed network the angle divider can divide the area which would otherwise be overlapped between the two network models. By default the setting is 45 degrees. When the divider is disabled the angle is set to zero degrees.

Read-only parameters

The function's *Info* page displays useful, real-time information on the state of the protection function. It is accessed either through the device's HMI display, or through the setting tool software when it is connected to the device and its Live Edit mode is active.

Table. 4.5.8 - 205. Information displayed by the function.

Name	Range	Step	Description
I0dir> LN behaviour	• On • Blocked • Test • Test/Blocked • Off	On	Set mode of NOC block. This parameter is visible only when *Allow setting of individual LN mode* is enabled in *General* menu.

© Arcteq Relays Ltd

Name	Range	Step	Description
I0dir> condition	• Normal • Start • Trip • Blocked	-	Displays the status of the protection function.
U0> Measuring now	• No U0 avail! • U0Calc • U3 Input • U4 Input	-	Displays which voltage channel is used by the function. If no voltage channel has been selected the function defaults to calculated residual voltage if line-to-neutral voltages have been connected to device. If no channel is set to "U0" mode and line-to-line voltages are connected, no residual voltage is available and "No U0 avail!" will be displayed.
U0> Pick-up setting	0.0...1 000 000V	0.1V	The required residual voltage on the primary side for the function to trip.
Detected U0/ I0 angle (fi)	-360.00...360.00deg	0.01deg	The angle in degrees between the monitored residual voltage and the current.
I0 Magnitude	0.000...250.000×$I0_n$	0.001×$I0_n$	The per-unit-value of the monitored residual current.
I0 Wattmetric I0xCos(fi)	-250.000...250.000×$I0_n$	0.001×$I0_n$	The wattmetric per-unit-value of the monitored residual current.
I0 Varmetric I0xSin(fi)	-250.000...250.000×$I0_n$	0.001×$I0_n$	The varmetric per-unit-value of the monitored residual current.
I0 direction now	• Undefined • Forward • Reverse	-	The detected direction of the residual current.
I0 meas/ I0 set now	-250.000...250.000×$I0_n$	0.001×$I0_n$	The ratio between the monitored residual current and the pick-up value.
U0 measurement now	0.000...500.000%$U0_n$	0.001%$U0_n$	The measured voltage in the chosen voltage channel.
Expected operating time	0.000...1800.000s	0.005s	Displays the expected operating time when a fault occurs. When IDMT mode is used, the expected operating time depends on the measured current value. If the measured current changes during a fault, the expected operating time changes accordingly.
Time remaining to trip	-1800.000...1800.000s	0.005s	When the function has detected a fault and counts down time towards a trip, this displays how much time is left before tripping occurs.

Function blocking

The blocking signal is evaluated at the start of each program cycle. The blocking signals are connected to the function's dedicated input, which can be configured in the *IO → Blocking Input Control* tab of the function.

- When the pick-up element activates and the blocking signal is not active, a START signal is generated, and the function starts or continues with the trip time countdown.
- When the pick-up element activates and the blocking signal is active, a BLOCKED signal is generated, and the function does not process the event further.

- When a START signal is already active and the blocking input signal becomes active, the START signal is reset and BLOCKED signal is generated. The release time characteristics are then processed in the same way as when the pick-up signal is reset.

The blocking signal needs to reach the device minimum of 5 ms before the set operating delay has passed in order for the blocking to activate in time.

The function also offers an optional internal inrush harmonic blocking feature. If the inrush harmonic pick-up is active at the same time as the protection function pick-up element, the trip delay timer continues counting down as normal. Once the countdown reaches zero, if the pick-up element remains active and the second harmonic value has dropped, the function issues a trip.

Table. 4.5.8 - 206. Internal inrush harmonic blocking settings.

Name	Range	Step	Default	Description
Inrush harmonic blocking (internal-only trip)	• No • Yes	-	• No	Enables and disables the 2nd harmonic blocking.
2nd harmonic blocking limit (Iharm/Ifund)	0.10…50.00%I_{fund}	0.01%I_{fund}	0.01%I_{fund}	Defines the limit of the 2nd harmonic blocking.

Operating time characteristics for trip and reset

This function supports definite time delay (DT) and inverse definite minimum time delay (IDMT). For detailed information on these delay types please refer to the chapter "General properties of a protection function" and its section "Operating time characteristics".

NOTICE!
IDMT settings are not available in broadrange mode.

Table. 4.5.8 - 207. Time delay settings specific to the directional earth fault function.

Name	Range	Step	Default	Description
Delay type of broad range characteristics	• Common time • Separate time for I0Cosfi and I0Sinfi	-	Common time	If broadrange mode is selected, it is possible to set separate time delay for earth faults in grounded networks and Petersen coil compensated networks.
Definite operating time delay (Compensated)	0.000…1800.000 s	0.005 s	0.040 s	Time delays for compensated and unearthed earth faults when "Delay type of broad range characteristics" has been set to "Separate".
Definite operating time delay (Unearthed)				

© Arcteq Relays Ltd
IM00099

Events and registers

The directional overcurrent function (abbreviated "DEF" in event block names) generates events and registers from the status changes in the events listed below. The user can select which event messages are stored in the main event buffer: ON, OFF, or both. The events triggered by the function are recorded with a time stamp.

The function's outputs can be used for direct I/O controlling and user logic programming. The function also provides a cumulative counter for the START, TRIP and BLOCKED events.

The function offers four (4) independent stages; the events are segregated for each stage operation.

Table. 4.5.8 - 208. Event messages.

Event block name	Event name
DEF1...DEF4	Start ON/OFF
DEF1...DEF4	Trip ON/OFF
DEF1...DEF4	Block ON/OFF
DEF1...DEF4	I0Cosfi Start ON/OFF
DEF1...DEF4	I0Sinfi Start ON/OFF
DEF1...DEF4	I0Cosfi Trip ON/OFF
DEF1...DEF4	I0Sinfi Trip ON/OFF

The function registers its operation into the last twelve (12) time-stamped registers; this information is available for all provided instances separately. The register of the function records the ON event process data for START, TRIP or BLOCKED. The table below presents the structure of the function's register content.

Table. 4.5.8 - 209. Register content.

Register	Description
Event	Event name
Date and time	dd.mm.yyyy hh:mm:ss.mss
I_0 pre-triggering current	Start/Trip -20ms current
I_0 fault current	Start/Trip current
Fault capacitive I_0	Start/Trip capacitive current
Fault resistive I_0	Start/Trip resistive current
Fault U_0 (%)	Start/Trip voltage (percentage of nominal)
Fault U_0 (V)	Start/Trip voltage (in Volts)
I_0 fault angle	0...360°
Trip time remaining	0 ms...1800s

Register	Description
Setting group in use	Setting group 1...8 active
Network GND	Unearthed, Petersen coil earthed, Earthed network
I_0 pre-fault current	Start -200ms current

4.5.9 Intermittent earth fault protection (I0int>; 67NT)

The intermittent earth fault is a transient type of single-phase-to-earth fault where the actual fault phenomenon lasts for about a few hundred microseconds. The intermittent earth fault is commonly seen in Petersen coil grounded (compensated) medium voltage networks. The intermittent earth fault is commonly thought only as a cable network problem but it can also occur in overhead line networks. The key point for this type of fault appearance is the compensation of earth fault currents with a Petersen coil.

This phenomenon is becoming more frequent as more utilities networks are replacing overhead lines with cables dug into the ground. This development in distribution networks is very understandable as overhead lines are more vulnerable to possible seasonal storm damages. Also, the annual maintenance costs as well as the annual power-down time are both significantly lower with underground cable networks than with overhead line networks. However, the problem at hand is caused by the increasing amount of cabling in the network which in turn causes dramatic increases in the capacitive earth fault currents in the distribution networks. When the capacitive earth fault current increases in the network, it becomes necessary to detect the earth fault current with a Petersen coil.

Problems caused by intermittent earth fault are normally seen in compensated network substations: an earth fault can trip multiple feeders simultaneously, or an entire substation can be tripped by residual voltage back-up protection from the incomer. This is typical of old-fashioned protection relays as it is not capable of differentiating between a normal consistent earth fault and an intermittent earth fault. As the intermittent earth fault is a transient type of fault where the actual fault lasts only for a few hundred microseconds, this causes traditional directional earth fault protection devices to lose their directional sensitivity, and as a result their directional decision algorithms go haywire and the trip decisions will be completely random. Typically, when a whole substation goes dark the logs of all protection relays show how they have experienced multiple incorrect directional earth fault starts and releases, as well as an incoming feeder protection relay residual voltage trip. This is also the worst case scenario. In another typical scenario a few feeders, including the correct faulty feeder, have tripped at the same time. In this case, as in the previous, all the protection relays' logs show various incorrect directional earth fault starts and releases.

Previously, these scenarios were usually ignored and filed under 'Mysteries of the universe' because they only occured once or twice a year and because disturbance recordings were not commonly used in normal medium-voltage substations for fault verification. However, when disturbance recorders were introduced as a common feature of protection devices this phenomenon received a name and defined characteristics. One such characteristic is the occurence of high magnitude current spikes, which –compared to residual voltage– are in the opposite direction of the current spike in faulty feeders and concurrent in healthy feeders. Handling these unique characteristics requires a completely different set of tools than what traditional directional earth fault protection can offer. The following figures present three intermittent earth fault situations experienced by protection relays in a substation..

© Arcteq Relays Ltd

Figure. 4.5.9 - 79. An intermittent earth fault in a medium size network tuned close to resonance, as seen by a protection relay of a faulty feeder.

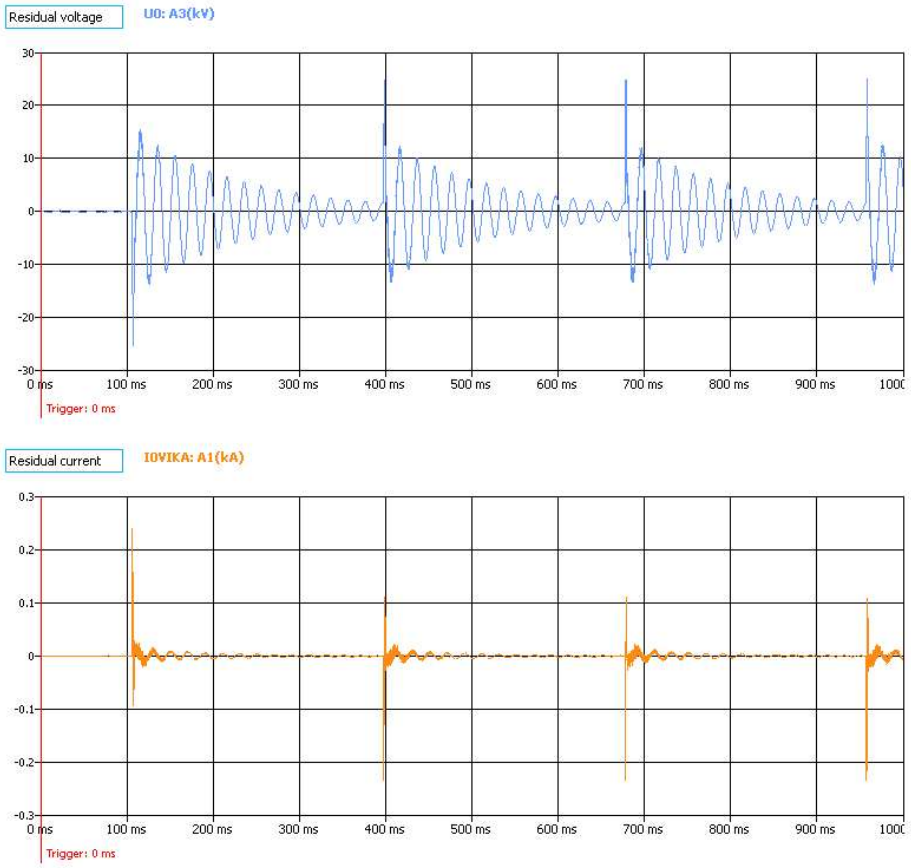

Figure. 4.5.9 - 80. An intermittent earth fault in a network tuned close to resonance, as seen by a protection relay of a healthy feeder.

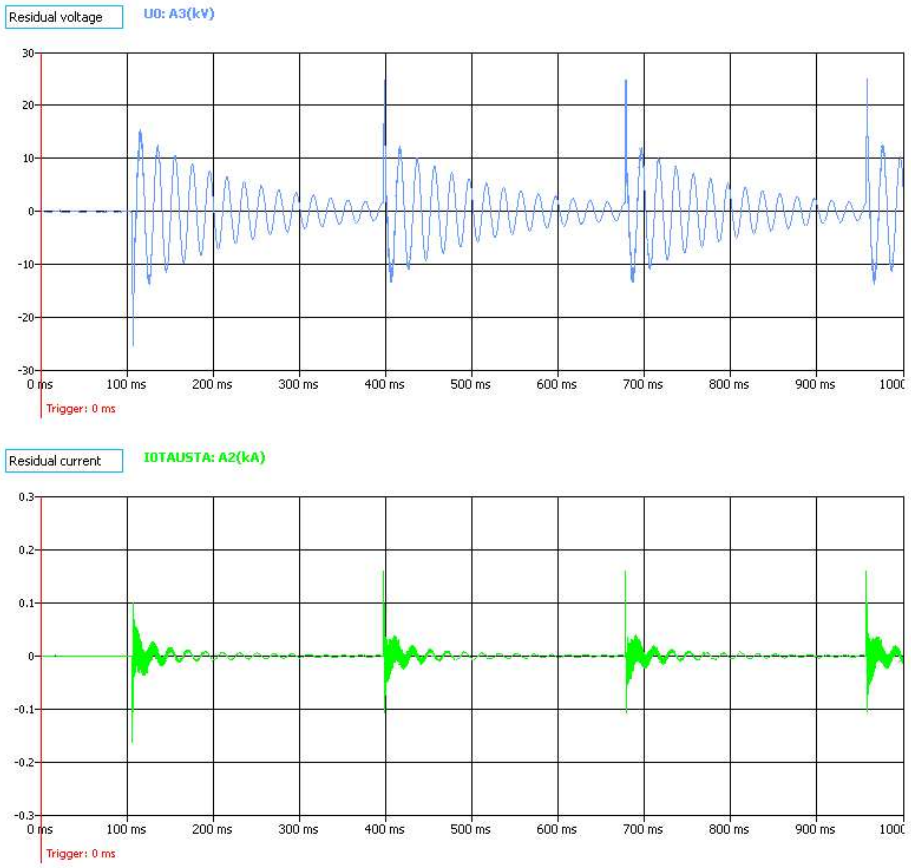

© Arcteq Relays Ltd

Figure. 4.5.9 - 81. An intermittent earth fault in an undercompensated medium size network, as seen by protection relay of a faulty feeder.

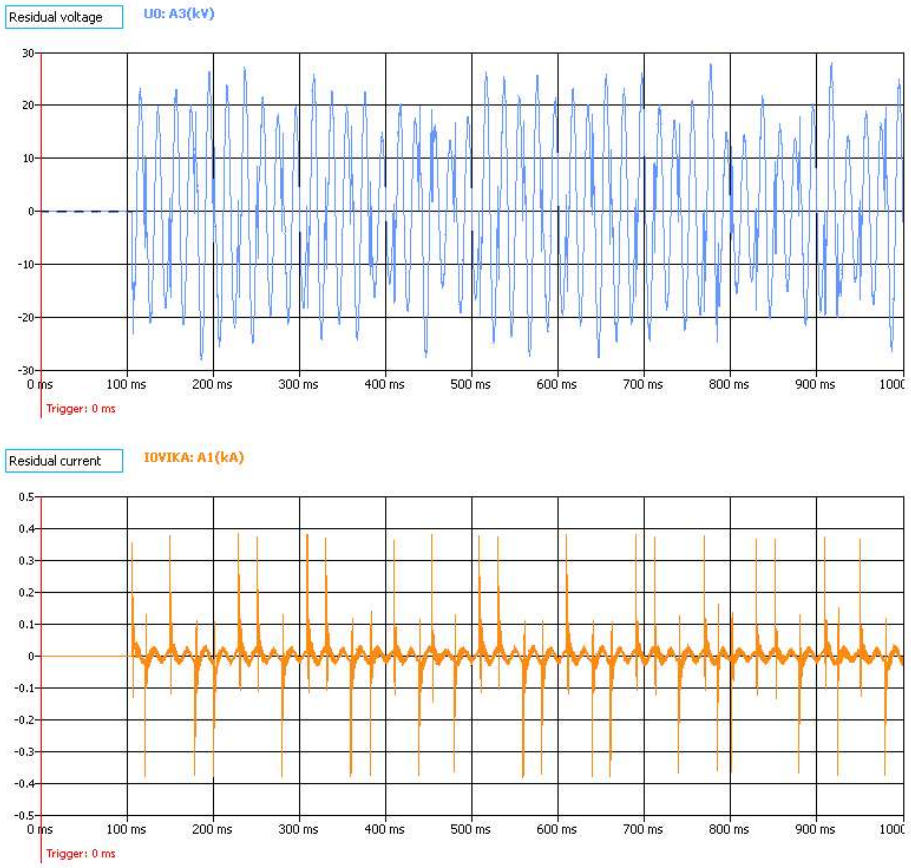

Figure. 4.5.9 - 82. Undercompensated medium size network intermittent earth fault seen by a protection relay of a healthy feeder.

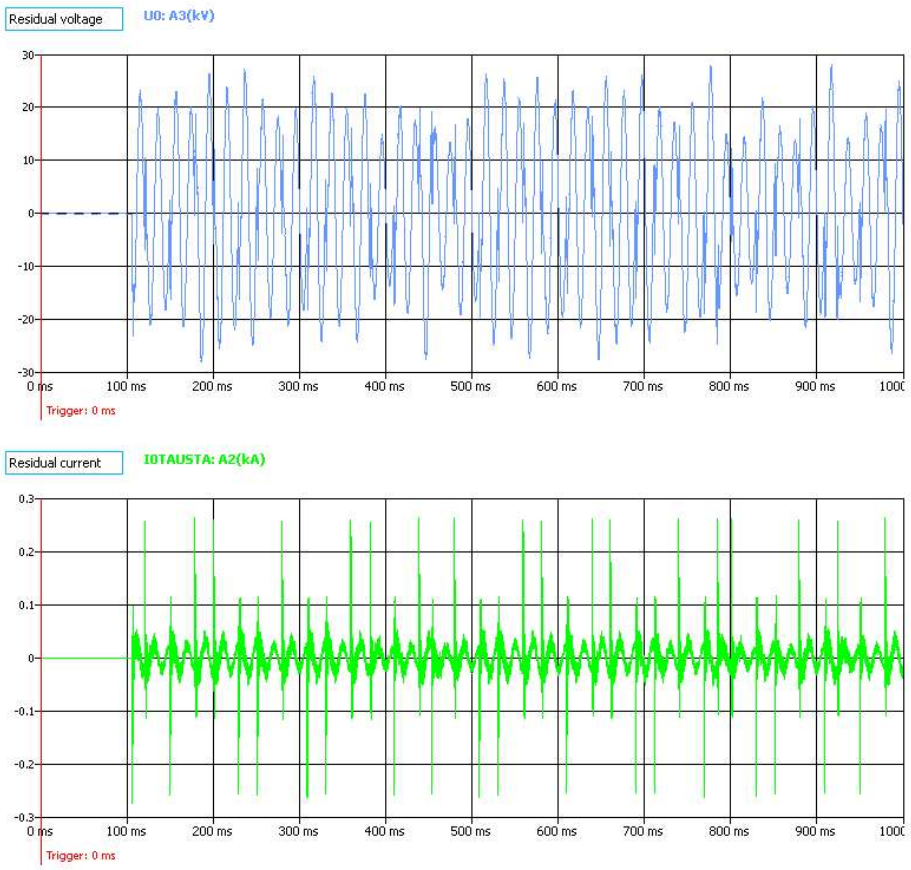

As can be seen from the figures above, the residual voltage is high both in the network tuned close to resonance and in the undercompensated network. In the case of a normal directional earth fault protection, a network tuned close to resonance would probably not even pick up on the fault, and if it did it would release before the set operating time. The residual voltage stays on for a longer period of time. Although the release would most likely come before the set tripping time, this situation could last for quite some time and put a lot of unnecessary stress on the network, possibly causing an insulator breakdown in another part of the network.

In undercompensated and overcompensated networks the residual voltage stays near the maximum level all the time, and current flashover spikes occur every power cycle. In this case, normal FFT-based directional earth fault protection algorithms lose their directional sense because an FFT-processed input signal expects the power cycle to provide long, stable data for accurate directional output. There are multiple zero crossings during a normal power cycle and therefore the FFT result may be anything from 0 to 180 degrees. When analyzing the situation from the point of view of normal directional earth fault protection, the result may be an expected trip in a faulty feeder, a false trip in a healthy feeder, or no trip whatsoever, all equally probable.

Description of the patented intermittent earth fault algorithm

The algorithm relates to a method for identifying transient-type earth faults in an electrical network and for selectively tripping a faulty branch line (A/D). The absolute value ($I0_{max}$) and its index in a zero-current buffer are retrieved from the samples of a zero-current sampling buffer. This is done by means of value-depicting the admittance-delta which is calculated using the ratio DELTAI0/DELTAU0: that is, the ratio between the zero current I0 difference DELTAI0 and the residual voltage UC difference DELTAU0. A negative admittance-delta is classified as forward (FWD). A transient-type earth fault is detected in the branch line with the aid of at least one forward (FWD) spike during a selected time (FWDreset).

© Arcteq Relays Ltd

More detailed information of the patent can be found on the European Patent Office webpages. The patent's data code is EP3213381 (A1).
A link to the patent: https://worldwide.espacenet.com/publicationDetails/biblio?II=2&ND=3&adjacent=true&locale=en_EP&FT=D&date=20170906&CC=EP&NR=3213381A1&KC=A1.

Setting principles

The intermittent earth fault protection will be coordinated with bus bar residual voltage protection. This way, during an intermittent earth fault, a faulty feeder's protection function will trip in all three previously described scenarios. Also, an intermittent earth fault protection function tripping before the residual voltage protection function results in a sufficient safety margin. However, since an intermittent earth fault causes significant network stress the protection trip should be performed as fast as possible.

The strike-through time of an intermittent earth fault in a network tuned close to resonance sets the limit for the minimum operating time for an intermittent earth fault protection stage. To ensure a correct protection operation in all cases, the reset time of an intermittent earth fault stage will be set according to the network in question, to such a level that ensures that the fault has disappeared and no new strike-throughs are expected after a prescribed reset time.

The size of the network is a dominant factor in defining the time interval of a strike-through. One can expect less frequent strike-throughs in larger (in amperes) networks. The following can be presented as a rule of a thumb: in a small or medium size network (<60 A) the strike-through interval is appr. 250...350 ms, in a large network (~100 A) it is appr. 500 ms. It is recommended that the reset time of an intermittent earth fault stage should not be set lower than 450 ms in order to obtain a network independent setting. Using this recommended value one can ensure that the function will not reset too early even in resonance tuned networks.

Usually the maximum operating time of an intermittent earth fault function is dictated by the residual voltage protection of the bus bar. If the residual voltage protection is set to very fast tripping, it may be necessary to also prolong its set value. It is recommended that the operating time of an intermittent earth fault stage should be 500 ms counting from the first strike-through. Using this recommended value the protection tripping requires a minimum of two strike-troughs even in resonance tuned networks in which strike-throughs occur less frequently. If the residual voltage protection is set to very fast tripping (<1 s), it may be necessary to verify the reset value of the residual voltage protection. The residual voltage protection operating time will never be faster than the sum of the following: the prescribed intermittent earth fault operating time, the circuit breaker operating time, and the reset time of the residual voltage protection stage.

If an intermittent earth fault protection start is used to block regular non-intermittent directional earth fault protection, the blocking should be applied to protection relays at both healthy and faulty feeders. In general, if intermittent earth fault protection is not used to block directional earth fault protection, it should be verified that the operating time of regular directional earth fault protection is longer than the set intermittent earth fault protection operating time. It is recommended to block regular directional earth fault protection to avoid start events in directional earth fault protection during intermittent earth faults (if start events are considered disturbing), or if directional non-intermittent earth fault protection is set to a faster operating time than intermittent earth fault protection.

If intermittent earth fault protection would be set for optimal operation, sensitive pick-up settings should be avoided. General setting parameter values are presented below.

Setting parameter	Value
Operating mode	Intermittent
Spike calculation mode	Absolute FWD spikes to trip
U0 Detect spike >	40 %
I0 Detect spike >	0.4 x $I0_n$

Setting parameter	Value
FWD reset time	0.450 s
REV reset time	0.450 s
Definite operating time delay	0.500 s
Spikes to trip >	2

The best verification for the settings is a field test with a test system capable of intermittent earth faults. One network characteristic may vary significantly from another. By following the basic rules presented in this chapter it should be easier to define the correct setting range.

It is also important to check that the reset time settings are never set longer than the desired operating time delay setting.

Measured input

The function block uses residual current measurement channels and neutral voltage measurement channels. Either the I_{01} or the I_{02} channel can be selected for residual current samples. Either U_3 or U_4 voltage channel can be selected for neutral voltage samples. The selection of the used measurement channels are made with setting parameters.

Table. 4.5.9 - 210. Measurement inputs of the I0int> function.

Signal	Description
U_3 samples	U_3 neutral voltage circular buffer of samples
U_4 samples	U_4 neutral voltage circular buffer of samples
I_{01} samples	I_0 residual current circular buffer of samples
I_{02} samples	I_0 residual current circular buffer of samples

General settings

The following general settings define the general behavior of the function. These settings are static i.e. it is not possible to change them by editing the setting group.

Table. 4.5.9 - 211. General settings of the function.

Name	Range	Default	Description
I0Int> [67NT] mode	• On • Blocked • Test • Test/ Blocked • Off	On	Set mode of IEF block. This parameter is visible only when *Allow setting of individual LN mode* is enabled in *General* menu.
I0Int> force status to	• Normal • Blocked • StartFWD • StartREV • Trip	Normal	Force the status of the function. Visible only when *Enable stage forcing* parameter is enabled in *General* menu.

© Arcteq Relays Ltd

Name	Range	Default	Description
Measurement side	• Side1 • Side2 • Side3	Side1	Defines which current measurement module is used by the function.
Input selection	• I01 • I02	I01	Defines which measured residual current is used by the function.
Protected line characteristics	• Protected line IE constant • Protected line IE varies • Manual advanced settings	Protected line IE constant	Defines the characteristics used by the function: **Protected line IE constant**: Earth fault current magnitude is constantly relatively high. This setting should be used in cases where the line length remains more or less constant. (Recommended setting) **Protected line IE varies**: Use this in cases where the network size varies a lot, thus affecting the amount of prospective earth fault current of the network. **Manual advanced settings**: Tuning parameters are simulated and given by customer support team based on fault recordings.

Pick-up settings

The setting parameters *U0 Detect spike>* and *I0 Detect spike>* control the pick-up of the I0int> function. They define the maximum allowed measured residual current and voltage before action from the function. The function constantly calculates the ratio between the setting and the maximum value of the circular buffer.

Table. 4.5.9 - 212. Pick-up settings.

Name	Range	Step	Default	Description
U0 Detect spike >	1.00…100.00%U_n	0.01%U_n	30.00%U_n	Pick-up setting U_0
I0 Detect spike >	0.05…40.00x$I0_n$	0.01x$I0_n$	0.30x$I0_n$	Pick-up setting I_0

The START signal is allowed if the blocking condition is not active and if the threshold of the admittance delta calculated by the input signal exceeds these settings:

- I0 Detect spike > = set admittance delta threshold
- U0 Detect spike > = set admittance delta threshold.

Read-only parameters

The function's *Info* page displays useful, real-time information on the state of the protection function. It is accessed either through the device's HMI display, or through the setting tool software when it is connected to the device and its Live Edit mode is active.

Table. 4.5.9 - 213. Information displayed by the function.

Name	Range	Step	Description
I0Int> [67NT] behaviour	• On • Blocked • Test • Test/Blocked • Off	-	Displays the mode of IEF block. This parameter is visible only when *Allow setting of individual LN mode* is enabled in *General* menu.

Name	Range	Step	Description
I0Int> condition	• Normal • StartFWD • StartREV • Trip • Blocked	-	Displays status of the protection function.
U0> measuring now	• No U0 avail! • U3 Input • U4 Input	-	Displays which voltage channel is used by the function. If no voltage channel has been selected the function defaults to "No U0 avail!".
Expected operating time	0.000...1800.000s	0.005s	Displays the expected operating time when a fault occurs.
Time remaining to trip	0.000...1800.000s	0.005s	When the function has detected a fault and counts down time towards a trip, this displays how much time is left before tripping occurs.
Spikes remaining to trip >	0...4294967295	1	Displays how many spikes need to be detected before tripping can occur.

Function blocking

The blocking signal is evaluated at the start of each program cycle. The blocking signals are connected to the function's dedicated input, which can be configured in the *IO → Blocking Input Control* tab of the function.

- When the pick-up element activates and the blocking signal is not active, a START signal is generated, and the function starts or continues with the trip time countdown.
- When the pick-up element activates and the blocking signal is active, a BLOCKED signal is generated, and the function does not process the event further.
- When a START signal is already active and the blocking input signal becomes active, the START signal is reset and BLOCKED signal is generated. The release time characteristics are then processed in the same way as when the pick-up signal is reset.

The blocking signal needs to reach the device minimum of 5 ms before the set operating delay has passed in order for the blocking to activate in time.

Operating time characteristics for trip and reset

The operating timers' behavior during a function can be set for trip signal and for the release of the function in case the pick-up element is reset before the trip time has been reached. A definite time (DT) operation gives the trip signal after a user-defined time delay regardless of the measured current as long as the pick-up element is active. The following table presents the setting parameters for the function time characteristics.

© Arcteq Relays Ltd
IM00099

Table. 4.5.9 - 214. Operating time characteristics setting parameters.

Name	Range	Step	Default	Description
Operating mode	• Intermittent • Transient	-	Intermittent	Defines the type of earth fault the function detects. Intermittent mode expects that there are 2 or more spikes in order to trip. Transient mode issues a trip for a transient type of fault and it doesn't need to detect multiple spikes in order to trip.
Spike calculation mode	• Absolute FWD spikes to trip • Cumulative sum of FWD-REV	-	Absolute FWD spikes to trip	The "Absolute FWD spikes to trip" setting sums detected forward spikes. Spike detected in the reverse direction resets the counter and the direction is changed. This setting is recommended for most cases. When "Cumulative sum of FWD-REV" is selected, spikes detected in the forward direction are added to the counter, and spikes detected to the reverse direction deduct from the counter. This setting is only to be used in cases where the network may be highly under- or overcompensated.
FWD reset time	0.000…1800.000s	0.005s	0.500s	Forward start detection reset time. Starts to count from the first detected forward (faulty feeder) spike. If while counting another spike is detected, the timer resets and starts from the beginning. If the timer runs to the end, it resets the function's STARTFWD signal.
REV reset time	0.000…1800.000s	0.005s	0.500s	Reverse start detection reset time. Starts to count from the first detected reverse (healthy feeder) spike. If while counting another spike is detected, the timer resets and starts from the beginning. If the timer runs to the end, it resets the function's STARTREV signal. This parameter is visible when operating mode is set to "Intermittent".
Definite operating time delay	0.000…1800.000s	0.005s	0.700s	Operating time counter that starts from the beginning of the fault if the FWD reset time is running and the function has a START signal on. If the FWD reset time is reached and the function releases, this timer is reset as well. This parameter is visible when operating mode is set to "Intermittent".
Spikes to trip >	1...50	1	2	The calculated cumulative spikes comparator. In order for the function to trip, a set number of spikes must be exceeded. If the set operating time is reached but the calculated spike number is below this, the setting function releases without a trip when the FWD reset time has elapsed. This parameter is visible when operating mode is set to "Intermittent".

Events and registers

The intermittent earth fault function (abbreviated "IEF" in event block names) generates events and registers from the status changes in the events listed below. The user can select which event messages are stored in the main event buffer: ON, OFF, or both. The events triggered by the function are recorded with a time stamp.

The function's outputs can be used for direct I/O controlling and user logic programming. The function also provides a cumulative counter for the START, TRIP and BLOCKED events.

Table. 4.5.9 - 215. Event messages.

Event block name	Event names
IEF1	Start FWD ON/OFF
IEF1	Start REV ON/OFF
IEF1	Trip ON/OFF
IEF1	Block ON/OFF
IEF1	Intermittent EF detected ON/OFF
IEF1	Normal earthfault detected
IEF1	Intermittent EF Locked

The function registers its operation into the last twelve (12) time-stamped registers. The register of the function records the ON event process data for START, TRIP or BLOCKED. The table below presents the structure of the function's register content.

Table. 4.5.9 - 216. Register content.

Name	Description
Date and time	dd.mm.yyyy hh:mm:ss.mss
Event	Event name
Trip time remaining	Time remaining from the set operating time.
Started FWD	YES/NO indication of the forward start in this fault.
Spikes FWD	The calculated cumulative amount of forward (faulty) feeder spikes.
Started REV	YES/NO indication of the reverse start in this fault.
Spikes REV	The calculated cumulative amount of reverse (healthy) feeder spikes
Spikes to trip	Set spikes to trip subtracted by the cumulative forward spikes. If 0 spikes, it trips.
Operating mode	Intermittent / Transient
Setting group in use	1...8

4.5.10 Negative sequence overcurrent/ phase current reversal/ current unbalance protection (I2>; 46/46R/46L)

The current unbalance function is used for instant and time-delayed unbalanced network protection and for detecting broken conductors. The number of stages in the function depends on the device model. The operating decisions are based on negative and positive sequence current magnitudes which the function constantly measures. In the broken conductor mode (I2/I1) the minimum allowed loading current is also monitored in the phase current magnitudes.

© Arcteq Relays Ltd

There are two possible operating modes available: the I2 mode monitors the negative sequence current, while the I2/I1 mode monitors the ratio between the negative sequence current and the positive sequence current. The device calculates the symmetrical component magnitudes in use from the phase current inputs I_{L1}, I_{L2} and I_{L3}. The zero sequence current is also recorded into the registers as well as the angles of the positive, negative and zero sequence currents in order to better verify any fault cases.

Measured input

The function block uses positive and negative sequence currents calculated from the phase current measurement channels. In the broken conductor mode (I2/I1) the function also uses fundamental frequency component of all phase currents to check the minimum current. Zero sequence and component sequence angles are used for fault registering and for fault analysis processing.

Table. 4.5.10 - 217. Measurement inputs of the I2> function.

Signal	Description
I1	Positive sequence current magnitude
I2	Negative sequence current magnitude
IZ	Zero sequence current magnitude
I1 ANG	Positive sequence current angle
I2 ANG	Negative sequence current angle
IZ ANG	Zero sequence current angle
I_{L1}RMS	Fundamental frequency component of phase L1 (A) current measurement
I_{L2}RMS	Fundamental frequency component of phase L2 (B) current measurement
I_{L3}RMS	Fundamental frequency component of phase L3 (C) current measurement

General settings

The following general settings define the general behavior of the function. These settings are static i.e. it is not possible to change them by editing the setting group.

Table. 4.5.10 - 218. General settings of the function.

Name	Range	Default	Description
I2> LN mode	• On • Blocked • Test • Test/ Blocked • Off	On	Set mode of CUB block. This parameter is visible only when *Allow setting of individual LN mode* is enabled in *General* menu.
I2> force status to	• Normal • Start • Trip • Blocked	Normal	Force the status of the function. Visible only when *Enable stage forcing* parameter is enabled in *General* menu.

Name	Range	Default	Description
Measurement side	• Side 1 • Side 2 • Side 3	Side 1	Defines which current measurement module is used by the function. Visible if the unit has more than one current measurement module.
Measured magnitude	• I2pu • I2/I1	I2pu	Defines whether the ratio between the positive and the negative sequence currents are supervised or whether only the negative sequence is used in detecting unbalance.

Pick-up settings

The setting parameters *I2$_{set}$ and I2/I1$_{set}$* control the the pick-up of the I2> function. They define the maximum allowed measured negative sequence current or the negative/positive sequence current ratio before action from the function. The function constantly calculates the ratio between the *I$_{set}$* and the measured magnitude (*I$_m$*). The reset ratio of 97 % is built into the function and is always relative to the *I$_{xset}$* value. The reset ratio is the same for both modes.

Setting group selection controls the operating characteristics of the function, i.e. the user or user-defined logic can change function parameters while the function is running.

Table. 4.5.10 - 219. Pick-up settings.

Name	Range	Step	Default	Description
I2set	0.01…40.00×I$_n$	0.01×I$_n$	0.2×I$_n$	Pick-up setting for I2 mode
I2/I1set	1…200%	0.01%	20%	Pick-up setting for I2/I1 mode

Read-only parameters

The function's *Info* page displays useful, real-time information on the state of the protection function. It is accessed either through the device's HMI display, or through the setting tool software when it is connected to the device and its Live Edit mode is active.

Table. 4.5.10 - 220. Information displayed by the function.

Name	Range	Description
I2> LN behaviour	On Blocked Test Test/ Blocked Off	Displays the mode of CUB block. This parameter is visible only when *Allow setting of individual LN mode* is enabled in *General* menu.
I2> condition	Normal Start Trip Blocked	Displays the status of the protection function.

Function blocking

The blocking signal is evaluated at the start of each program cycle. The blocking signals are connected to the function's dedicated input, which can be configured in the *IO → Blocking Input Control* tab of the function.

© Arcteq Relays Ltd

- When the pick-up element activates and the blocking signal is not active, a START signal is generated, and the function starts or continues with the trip time countdown.
- When the pick-up element activates and the blocking signal is active, a BLOCKED signal is generated, and the function does not process the event further.
- When a START signal is already active and the blocking input signal becomes active, the START signal is reset and BLOCKED signal is generated. The release time characteristics are then processed in the same way as when the pick-up signal is reset.

The blocking signal needs to reach the device minimum of 5 ms before the set operating delay has passed in order for the blocking to activate in time.

Operating time characteristics for trip and reset

The operating timers' behavior during a function can be set for TRIP signal and also for the release of the function in case the pick-up element is reset before the trip time has been reached. There are three basic operating modes available for the function:

- Instant operation: gives the TRIP signal with no additional time delay simultaneously with the start signal.
- Definite time operation (DT): gives the TRIP signal after a user-defined time delay regardless of the measured current as long as the current is above or below the i_{set} value and thus the pick-up element is active (independent time characteristics).
- Inverse definite minimum time (IDMT): gives the TRIP signal after a time which is in relation to the set pick-up value I_{set} and the measured current I_m (dependent time characteristics).

Both IEC and IEEE/ANSI standard characteristics as well as user settable parameters are available for the IDMT operation.

Unique to the current unbalance protection is the availability of the "Curve2" delay which follows the formula below:

$$t = \frac{k}{{I_{2meas}}^2 - {I_{set}}^2}$$

- t = Operating time
- I_{2meas} = Calculated negative sequence
- k = Constant k value (user settable delay multiplier)
- I_{set}= Pick-up setting of the function

Figure. 4.5.10 - 83. Operation characteristics curve for I2> Curve2.

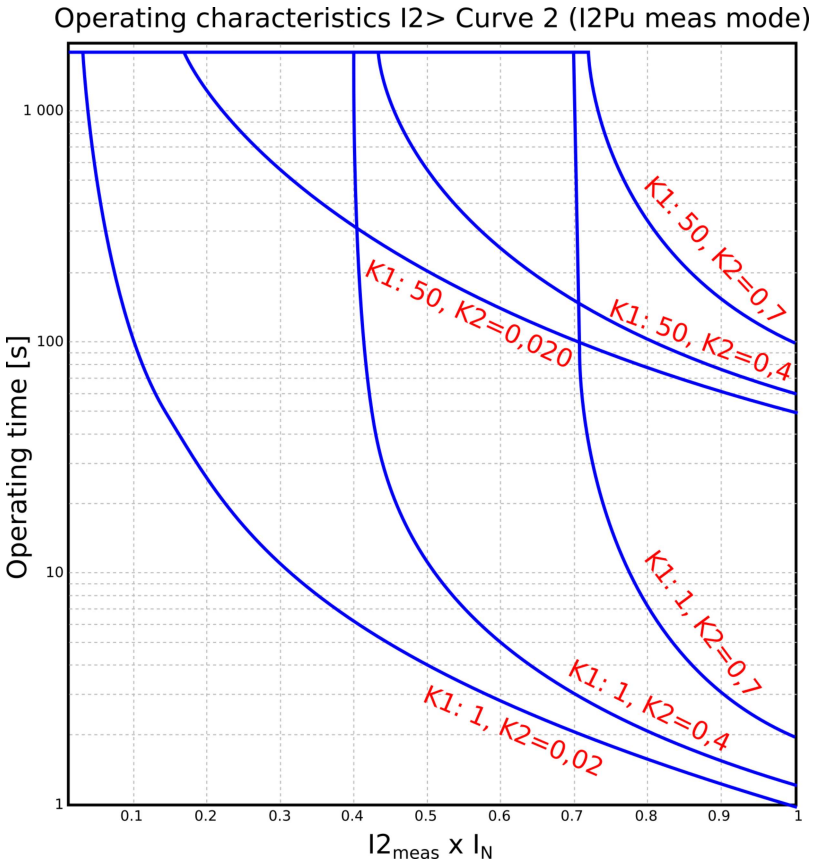

For a more detailed description on the time characteristics and their setting parameters, please refer to the "General properties of a protection function" chapter and its "Operating time characteristics" section.

Events and registers

The current unbalance function (abbreviated "CUB" in event block names) generates events and registers from the status changes in the events listed below. The user can select which event messages are stored in the main event buffer: ON, OFF, or both. The events triggered by the function are recorded with a time stamp.

The function's outputs can be used for direct I/O controlling and user logic programming. The function also provides a resettable cumulative counter for the START, TRIP and BLOCKED events.

The function offers four (4) independent stages; the events are segregated for each stage operation.

Table. 4.5.10 - 221. Event messages.

Event block name	Event names
CUB1...CUB4	Start ON/OFF
CUB1...CUB4	Trip ON/OFF
CUB1...CUB4	Block ON/OFF

The function registers its operation into the last twelve (12) time-stamped registers. The register of the function records the ON event process data for START, TRIP or BLOCKED. The table below presents the structure of the function's register content.

© Arcteq Relays Ltd

Table. 4.5.10 - 222. Register content.

Register	Description
Event	Event name
Date and time	dd.mm.yyyy hh:mm:ss.mss
Pre-trigger current	Start/Trip -20ms current
Fault current	Start/Trip current
Pre-fault current	Start -200ms current
Fault currents	I1, I2, IZ mag. and ang.
Trip time remaining	0 ms...1800s
Setting group in use	Setting group 1...8 active

4.5.11 Harmonic overcurrent protection (Ih>; 50H/51H/68H)

The harmonic overcurrent function is used for non-directional instant and time-delayed overcurrent detection and clearing. The number of stages in the function depends on the device model. The function constantly measures the selected harmonic component of the selected measurement channels, the value being either absolute value or relative to the RMS value.

Measured input

The function block uses analog current measurement values from phase or residual currents. Each measurement input of the function block uses RMS (fundamental frequency component) values and harmonic components of the selected current input. The user can select the monitored magnitude to be equal to the per-unit RMS values of the harmonic component, or to the harmonic component percentage content compared to the RMS values.

Table. 4.5.11 - 223. Measurement inputs of the Ih> function.

Signal	Description
I_{L1}FFT	The magnitudes (RMS) of phase L1 (A) current components: - Fundamental - 2nd harmonic - 3rd harmonic - 4th harmonic - 5th harmonic - 6th harmonic - 7th harmonic - 9th harmonic - 11th harmonic - 13th harmonic - 15th harmonic - 17th harmonic - 19th harmonic.

Signal	Description
$I_{L2}FFT$	The magnitudes (RMS) of phase L2 (B) current components: - Fundamental - 2nd harmonic - 3rd harmonic - 4th harmonic - 5th harmonic - 6th harmonic - 7th harmonic - 9th harmonic - 11th harmonic - 13th harmonic - 15th harmonic - 17th harmonic - 19th harmonic.
$I_{L3}FFT$	The magnitudes (RMS) of phase L3 (C) current components: - Fundamental - 2nd harmonic - 3rd harmonic - 4th harmonic - 5th harmonic - 6th harmonic - 7th harmonic - 9th harmonic - 11th harmonic - 13th harmonic - 15th harmonic - 17th harmonic - 19th harmonic.
$I_{01}FFT$	The magnitudes (RMS) of residual $I0_1$ current components: - Fundamental - 2nd harmonic - 3rd harmonic - 4th harmonic - 5th harmonic - 6th harmonic - 7th harmonic - 9th harmonic - 11th harmonic - 13th harmonic - 15th harmonic - 17th harmonic - 19th harmonic.

© Arcteq Relays Ltd

Signal	Description
I_{02}FFT	The magnitudes (RMS) of residual $I0_2$ current components: - Fundamental - 2nd harmonic - 3rd harmonic - 4th harmonic - 5th harmonic - 6th harmonic - 7th harmonic - 9th harmonic - 11th harmonic - 13th harmonic - 15th harmonic - 17th harmonic - 19th harmonic.

General settings

The function can be set to monitor the ratio between the measured harmonic and either the measured fundamental component or the per unit value of the harmonic current. The user must select the correct measurement input.

Table. 4.5.11 - 224. Operating mode selection settings.

Name	Range	Default	Description
Ih> LN mode	• On • Blocked • Test • Test/ Blocked • Off	On	Set mode of HOC block. This parameter is visible only when *Allow setting of individual LN mode* is enabled in *General* menu.
Ih> force status to	• Normal • Start • Trip • Blocked	Normal	Force the status of the function. Visible only when *Enable stage forcing* parameter is enabled in *General* menu.
Ih> measurement side	• Side 1 • Side 2 • Side 3	Side 1	Defines which current measurement module is used by the function. Visible if the unit has more than one current measurement module.

Name	Range	Default	Description
Harmonic selection	• 2nd harmonic • 3rd harmonic • 4th harmonic • 5th harmonic • 6th harmonic • 7th harmonic • 9th harmonic • 11th harmonic • 13th harmonic • 15th harmonic • 17th harmonic • 19th harmonic	2nd harmonic	Selection of the monitored harmonic component.
Per unit or relative	• × I_n • Ih/IL	× I_n	Selection of the monitored harmonic mode. Either directly per unit x I_n or in relation to the fundamental frequency magnitude.
Measurement input	• IL1/IL2/IL3 • I01 • I02	IL1/IL2/IL3	Selection of the measurement input (either phase current or residual current).

Pick-up settings

The setting parameter Ih_{set} per unit or *Ih/IL* (depending on the selected operating mode) controls the pick-up of the Ih> function. This defines the maximum allowed measured current before action from the function. The function constantly calculates the ratio between the Ih_{set} per unitor *Ih/IL* and the measured magnitude (I_m) for each of the three phases. The reset ratio of 97 % is built into the function and is always relative to the Ih_{set} per unit or *Ih/IL*value. The setting value is common for all measured phases, and when the I_m exceeds the I_{set} value (in single, dual or all phases) it triggers the pick-up operation of the function.

Setting group selection controls the operating characteristics of the function, i.e. the user or user-defined logic can change function parameters while the function is running.

Table. 4.5.11 - 225. Pick-up settings.

Name	Range	Step	Default	Description
Ih_{set} pu	0.05…2.00×I_n	0.01×I_n	0.20×I_n	Pick-up setting (per unit monitoring)

© Arcteq Relays Ltd

Name	Range	Step	Default	Description
Ih/IL	5.00…200.00%	0.01%	20.00%	Pick-up setting (percentage monitoring)

Read-only parameters

The function's *Info* page displays useful, real-time information on the state of the protection function. It is accessed either through the device's HMI display, or through the setting tool software when it is connected to the device and its Live Edit mode is active.

Table. 4.5.11 - 226. Information displayed by the function.

Name	Range	Step	Description
Ih> behaviour	• On • Blocked • Test • Test/Blocked • Off	-	Displays the mode of HOC block. This parameter is visible only when *Allow setting of individual LN mode* is enabled in *General* menu.
Ih> condition	• Normal • Start • Trip • Blocked	-	Displays the status of the protection function.
Ih meas/ Ih set now	0.00...100000.00I_m/I_{set}	0.01I_m/I_{set}	The ratio between the monitored residual current and the pick-up value.
Expected operating time	0.000...1800.000s	0.005s	Displays the expected operating time when a fault occurs. When IDMT mode is used, the expected operating time depends on the measured voltage value. If the measured voltage changes during a fault, the expected operating time changes accordingly.
Time remaining to trip	-1800.000...1800.000s	0.005s	When the function has detected a fault and counts down time towards a trip, this displays how much time is left before tripping occurs.

Function blocking

The blocking signal is evaluated at the start of each program cycle. The blocking signals are connected to the function's dedicated input, which can be configured in the *IO → Blocking Input Control* tab of the function.

- When the pick-up element activates and the blocking signal is not active, a START signal is generated, and the function starts or continues with the trip time countdown.
- When the pick-up element activates and the blocking signal is active, a BLOCKED signal is generated, and the function does not process the event further.
- When a START signal is already active and the blocking input signal becomes active, the START signal is reset and BLOCKED signal is generated. The release time characteristics are then processed in the same way as when the pick-up signal is reset.

The blocking signal needs to reach the device minimum of 5 ms before the set operating delay has passed in order for the blocking to activate in time.

Operating time characteristics for trip and reset

This function supports definite time delay (DT) and inverse definite minimum time delay (IDMT). For detailed information on these delay types please refer to the chapter "General properties of a protection function" and its section "Operating time characteristics".

Events and registers

The harmonic overcurrent function (abbreviated "HOC" in event block names) generates events and registers from the status changes in the events listed below. The user can select which event messages are stored in the main event buffer: ON, OFF, or both. The events triggered by the function are recorded with a time stamp.

The function's outputs can be used for direct I/O controlling and user logic programming. The START signal can be used to block other stages; if the situation lasts longer, the TRIP signal can be used on other actions as time-delayed. The function also provides a resettable cumulative counter for the START, TRIP and BLOCKED events.

The function offers four (4) independent stages; the events are segregated for each stage operation.

Table. 4.5.11 - 227. Event description.

Event block name	Event names
HOC1...HOC4	Start ON/OFF
HOC1...HOC4	Trip ON/OFF
HOC1...HOC4	Block ON/OFF

The function registers its operation into the last twelve (12) time-stamped registers. The register of the function records the ON event process data for START, TRIP or BLOCKED. The table below presents the structure of the function's register content.

Table. 4.5.11 - 228. Register content.

Register	Description
Date and time	dd.mm.yyyy hh:mm:ss.mss
Event	Event name
Fault type	L1-G…L1-L2-L3
Pre-trigger current	Start/Trip -20ms current
Fault current	Start/Trip current
Pre-fault current	Start -200ms current
Trip time remaining	0 ms...1800s
Setting group in use	Setting group 1...8 active

© Arcteq Relays Ltd
IM00099

4.5.12 Circuit breaker failure protection (CBFP; 50BF/52BF)

The circuit breaker failure protection function is used for monitoring the circuit breaker operation after it has received a TRIP signal. The function can also be used to retrip a failing breaker; if the retrip fails, an incoming feeder circuit breaker can be tripped by using the function's CBFP output. The retrip functionality can be disabled if the breaker does not have two trip coils.

The function can be triggered by the following:

- overcurrent (phase and residual)
- digital output monitor
- digital signal
- any combination of the above-mentioned triggers.

In the current-dependent mode the function constantly measures phase current magnitudes and the selected residual current. In the signal-dependent mode any of the device's binary signals (trips, starts, logical signals etc.) can be used to trigger the function. In the digital output-dependent mode the function monitors the status of the selected output relay control signal.

Measured input

The function block uses fundamental frequency component of phase current and residual current measurement values. The user can select I01, I02 or the calculated I0 for the residual current measurement.

Table. 4.5.12 - 229. Measurement inputs of the CBFP function.

Signal	Description
I_{L1}RMS	Fundamental frequency component of phase L1 (A) current measurement
I_{L2}RMS	Fundamental frequency component of phase L2 (B) current measurement
I_{L3}RMS	Fundamental frequency component of phase L3 (C) current measurement
I_{01}RMS	Fundamental frequency component of residual input I_{01} measurement
I_{02}RMS	Fundamental frequency component of residual input I_{02} measurement
I_{0Calc}	Calculated residual current from the phase current inputs

General settings

The following general settings define the general behavior of the function. These settings are static i.e. it is not possible to change them by editing the setting group.

Table. 4.5.12 - 230. CBFP monitoring signal definitions.

Name	Description
Signal in monitor	Defines which TRIP events of the used protection functions trigger the CBFP countdown. For the CBFP function to monitor the signals selected here, the "Operation mode selection" parameter must be set to a mode that includes signals (e.g. "Signals only", "Signals or DO", "Current and signals and DO").

Name	Description
Trip monitor	Defines which output relay of the used protection functions trigger the CBFP countdown. For the CBFP function to monitor the output relays selected here, the "Operation mode selection" parameter must be set to a mode that includes digital outputs (e.g. "DO only", "Current and DO", "Current or signals or DO").

Table. 4.5.12 - 231. General settings of the function.

Name	Range	Default	Description
CBFP LN mode	• On • Blocked • Test • Test/ Blocked • Off	On	Set mode of CBF block. This parameter is visible only when *Allow setting of individual LN mode* is enabled in *General* menu.
CBFP force status to	• Normal • Start • ReTrip • CBFP • Blocked	Normal	Force the status of the function. Visible only when *Enable stage forcing* parameter is enabled in *General* menu.
Measurement side	• Side 1 • Side 2 • Side 3	Side 1	Defines which current measurement module is used by the function.

Pick-up settings

The setting parameters I_{set} and $I0_{set}$ control the pick-up and the activation of the current-dependent CBFP function. They define the minimum allowed measured current before action from the function. The function constantly calculates the ratio between the I_{set} or the $I0_{set}$ and the measured magnitude (I_m) for each of the three phases and the selected residual current input. The reset ratio of 97 % is built into the function and is always relative to the I_{set} value. The setting value is common for all measured phases. When the I_m exceeds the I_{set} value (in single, dual or all phases) it triggers the pick-up operation of the function.

Setting group selection controls the operating characteristics of the function, i.e. the user or user-defined logic can change function parameters while the function is running.

Table. 4.5.12 - 232. Operating mode and input signals selection.

Name	Range	Step	Default	Description
I0Input	• Not in use • I01 • I02 • I0Calc	-	Not in use	Selects the residual current monitoring source, which can be either from the two separate residual measurements (I01 and I02) or from the phase current's calculated residual current.

© Arcteq Relays Ltd

Name	Range	Step	Default	Description
Actmode	• Current only • DO only • Signals only • Current and DO • Current or DO • Current and signals • Current or signals • Signals and DO • Signals or DO • Current or DO or signals • Current and DO and Signals	-	Current only	Selects the operating mode. The mode can be dependent on current measurement, binary signal status, output relay status ("DO"), or a combination of the three.

Table. 4.5.12 - 233. Pick-up settings.

Name	Range	Step	Default	Description
I_{set}	0.01…40.00×I_n	0.01×I_n	0.20×I_n	The pick-up threshold for the phase current measurement. This setting limit defines the upper limit for the phase current pick-up element.
$I0_{set}$	0.005...40.000×I_n	0.001×I_n	1.200×I_n	The pick-up threshold for the residual current measurement. This setting limit defines the upper limit for the phase current pick-up element.

Read-only parameters

The function's *Info* page displays useful, real-time information on the state of the protection function. It is accessed either through the device's HMI display, or through the setting tool software when it is connected to the device and its Live Edit mode is active.

Table. 4.5.12 - 234. Information displayed by the function.

Name	Range	Description
CBFP LN behaviour	• On • Blocked • Test • Test/ Blocked • Off	Displays the mode of CBF block. This parameter is visible only when *Allow setting of individual LN mode* is enabled in *General* menu.
CBFP condition	• Normal • Start • ReTrip • CBFP On • Blocked	Displays status of the protection function.

Function blocking

The block signal is checked in the beginning of each program cycle. The blocking signal is received from the blocking matrix in the function's dedicated input. If the blocking signal is not activated when the pick-up element activates, a START signal is generated and the function proceeds to the time characteristics calculation.

If the blocking signal is active when the pick-up element activates, a BLOCKED signal is generated and the function does not process the situation further. If the START function has been activated before the blocking signal, it resets and processes the release time characteristics similarly to when the pick-up signal is reset.

The variables the user can set are binary signals from the system. The blocking signal needs to reach the device minimum of 5 ms before the set operating delay has passed in order for the blocking to activate in time.

Operating time characteristics

The operating timers' behavior during a function can be set depending on the application. The same pick-up signal starts both timers. When retrip is used the time grading should be set as follows: the sum of specific times (i.e. the retrip time, the expected operating time, and the pick-up conditions' release time) is shorter the set CBFP time. This way, when retripping another breaker coil clears the fault, any unnecessary function triggers are avoided.

The following table presents the setting parameters for the function's operating time characteristics.

Table. 4.5.12 - 235. Setting parameters for operating time characteristics.

Name	Range	Step	Default	Description
Retrip	• No • Yes	-	Yes	Retrip enabled or disabled. When the retrip is disabled, the output will not be visible and the TRetr setting parameter will not be available.
Retrip time delay	0.000…1800.000s	0.005s	0.100s	Retrip start the timer. This setting defines how long the starting condition has to last before a RETRIP signal is activated.

© Arcteq Relays Ltd

Name	Range	Step	Default	Description
CBFP	0.000…1800.000s	0.005s	0.200s	CBFP starts the timer. This setting defines how long the starting condition has to last before the CBFP signal is activated.

The following figures present some typical cases of the CBFP function.

Trip, Retrip and CBFP in the device configuration

Figure. 4.5.12 - 84. Wiring diagram when Trip, Retrip and CBFP are configured to the device.

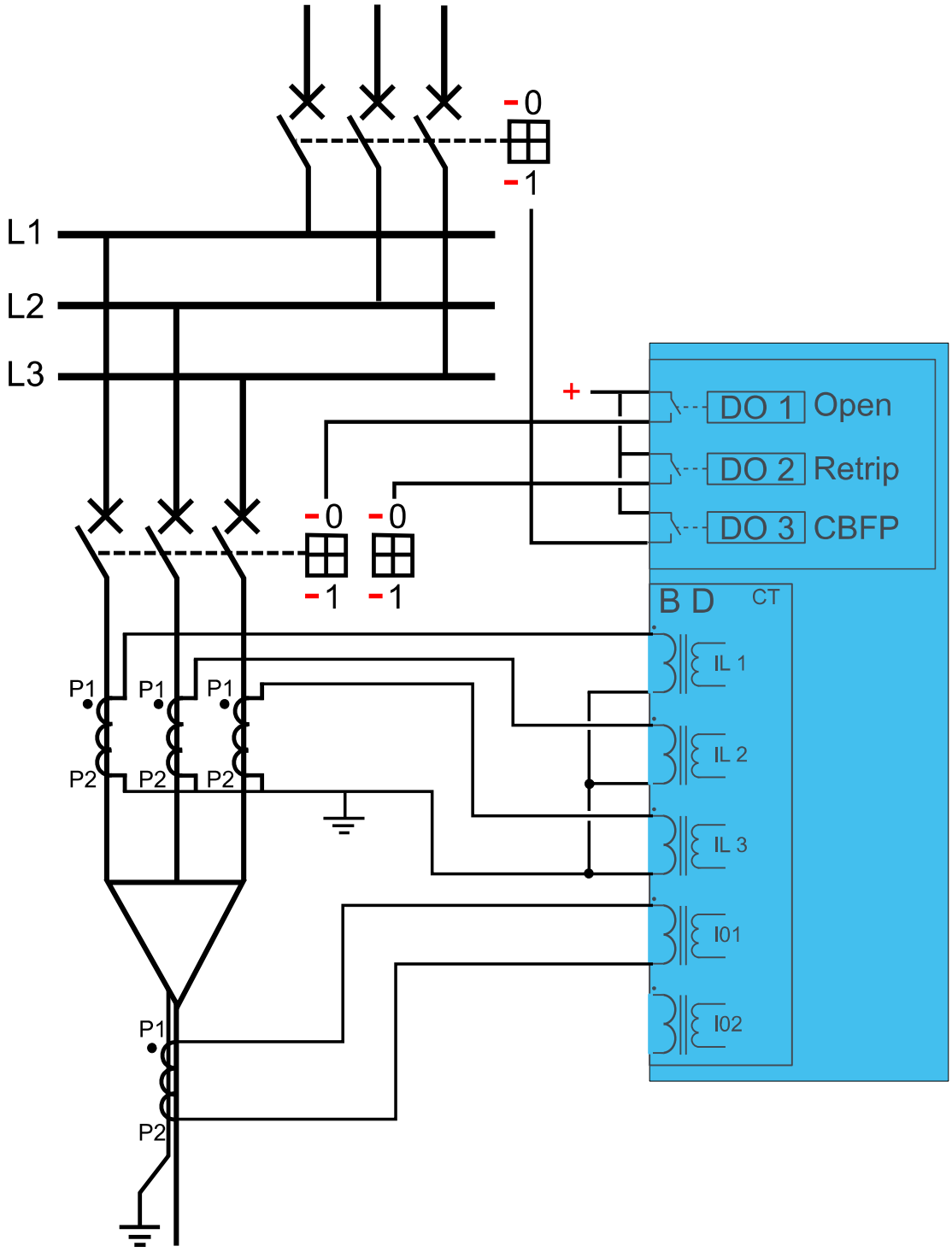

The retrip functionality can be used in applications whose circuit breaker has a retrip or a redundant trip coil available. The TRIP signal is normally wired to the breaker's trip coil from the device's trip output. The retrip is wired from its own device output contact in parallel with the circuit breaker's redundant trip coil. The CBFP signal is normally wired from its device output contact to the incoming feeder circuit breaker. Below are a few operational cases regarding the various applications.

© Arcteq Relays Ltd

Figure. 4.5.12 - 85. Retrip and CBFP when "Current" is the selected criterion.

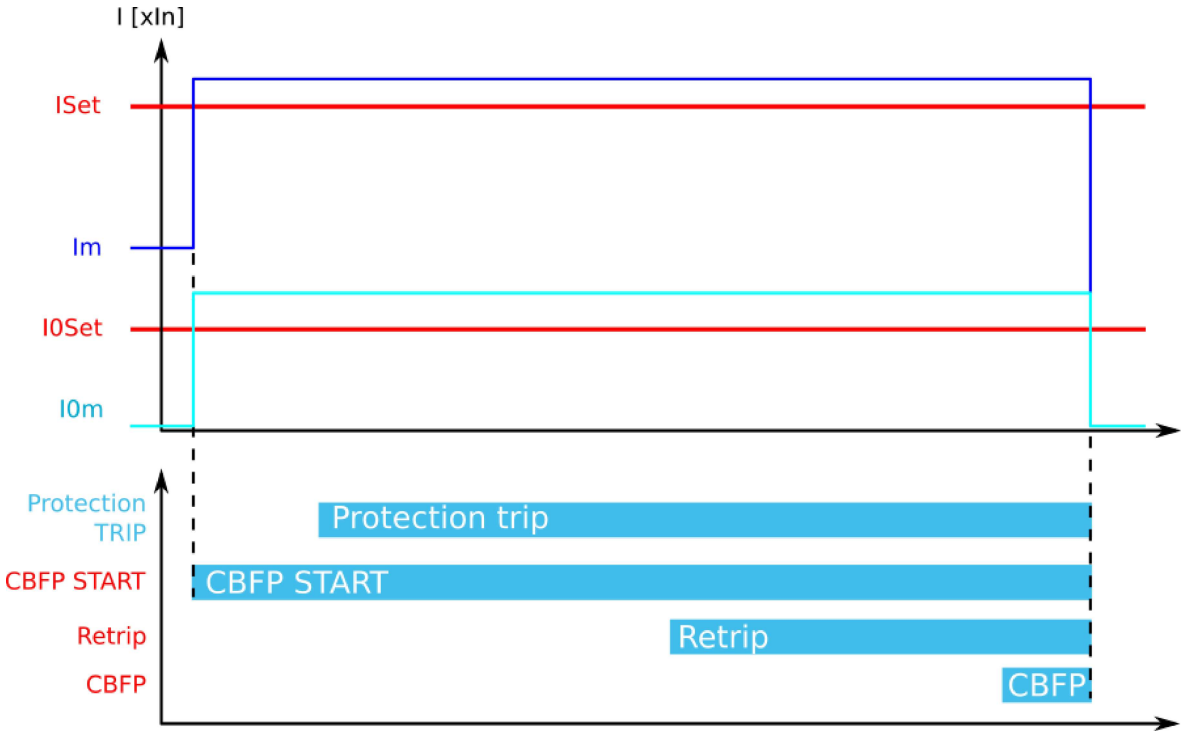

When the current threshold setting of I_{set} and/or $I0_{set}$ is exceeded, the current-based protection is activated and the counters for RETRIP and CBFP start calculating the set operating time. The tripping of the primary protection stage is not monitored in this configuration. Therefore, if the current is not reduced below the setting limit, a RETRIP signal is sent to the redundant trip coil. If the current is not reduced within the set time limit, the function also sends a CBFP signal to the incoming feeder breaker. If the primary protection function clears the fault, both counters (RETRIP and CBFP) are reset as soon as the measured current is below the threshold settings.

Figure. 4.5.12 - 86. Retrip and CBFP when "Current and DO" is the selected criterion.

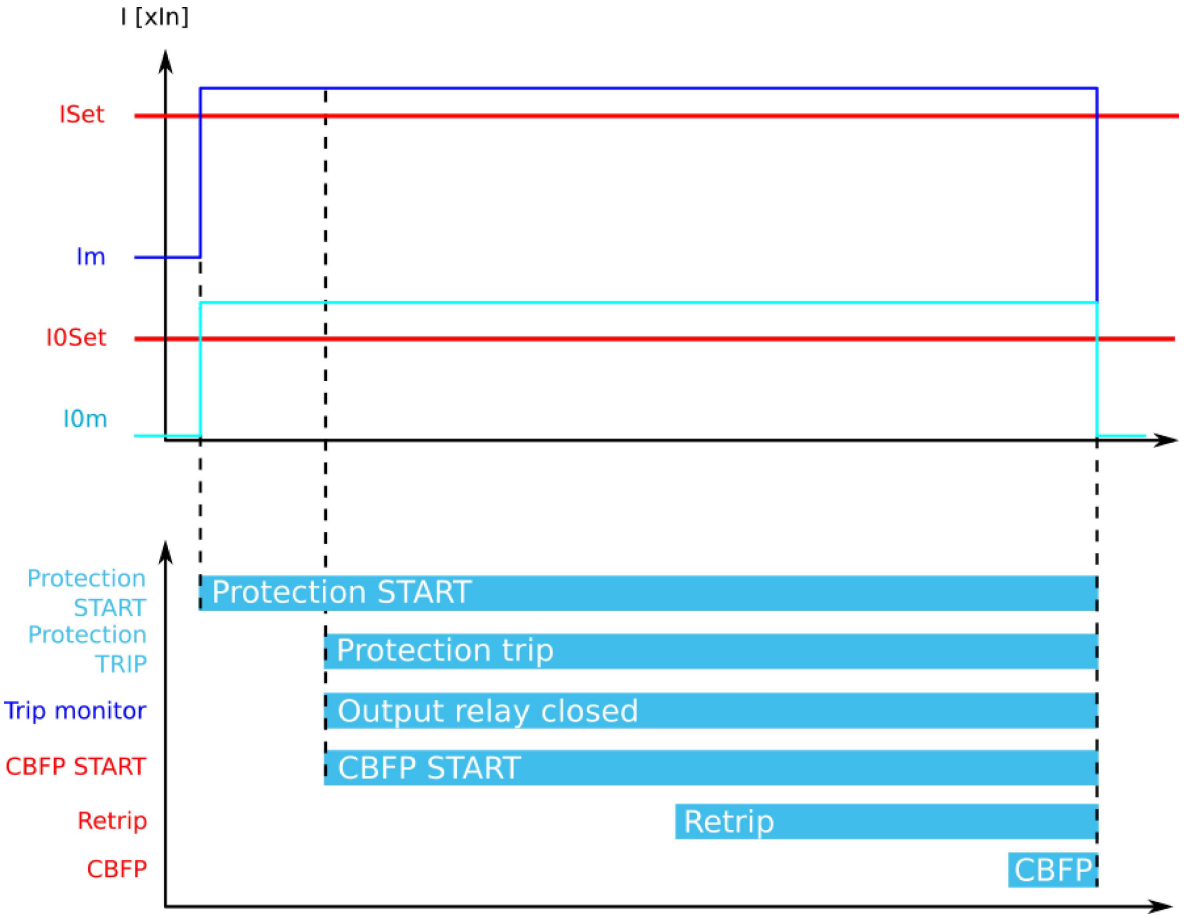

When the current threshold setting of I_{set} and/or $I0_{set}$ is exceeded, the current-based protection is activated. At the same time, the counters for RETRIP and CBFP are halted until the monitored output contact is controlled (that is, until the primary protection operates). When the tripping signal reaches the primary protection stage, the RETRIP and CBFP counters start calculating the set operating time. The tripping of the primary protection stage is constantly monitored in this configuration. If the current is not reduced below the setting limit or the primary stage tripping signal is not reset, a RETRIP signal is sent to the redundant trip coil. If the retripping fails and the current is not reduced below the setting limit or the primary stage tripping signal is not reset, the function also sends a CBFP signal to the incoming feeder circuit breaker. If the primary protection function clears the fault, both counters (RETRIP and CBFP) are reset as soon as the measured current is below the threshold settings or the tripping signal is reset. This configuration allows the CBFP to be controlled with current-based functions alone, and other function trips can be excluded from the CBFP functionality.

© Arcteq Relays Ltd

Figure. 4.5.12 - 87. Retrip and CBFP when "Current or DO" is the selected criterion.

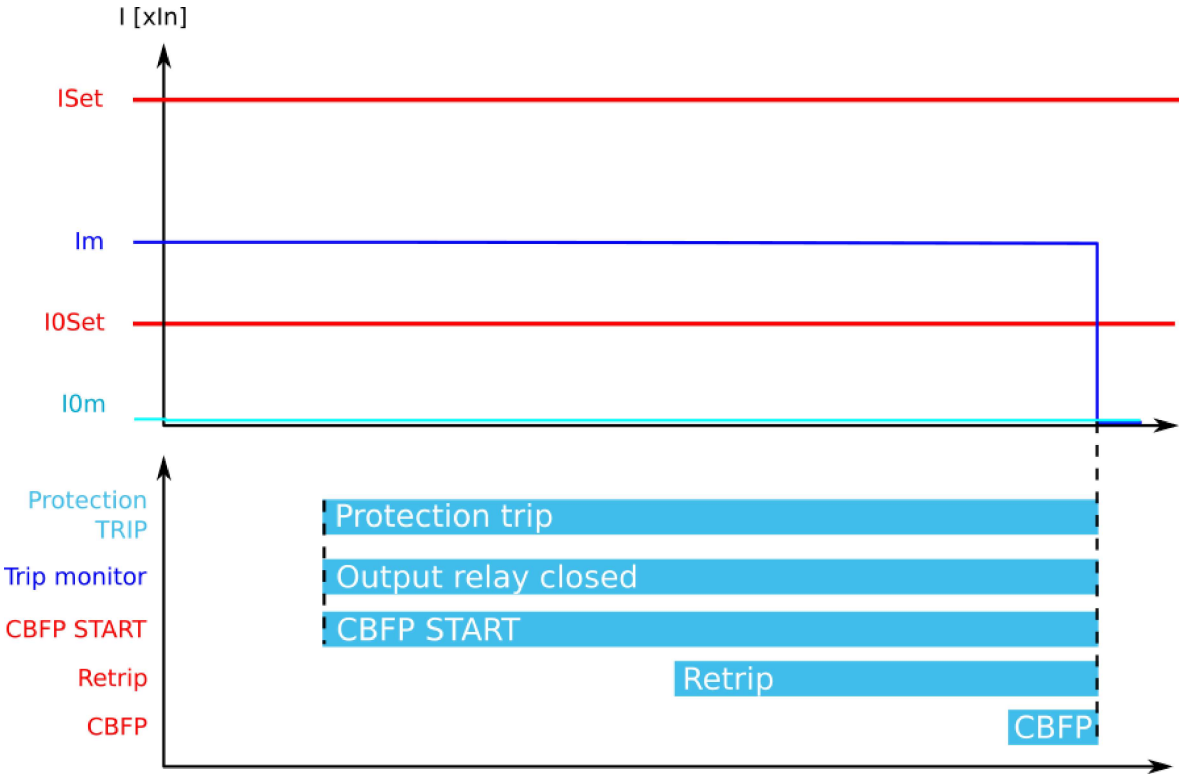

When the current threshold setting of I_{set} and/or $I0_{set}$ is exceeded, or the TRIP signal reaches the primary protection stage, the function starts counting down towards the RETRIP and CBFP signals. The tripping of the primary protection stage is constantly monitored in this configuration regardless of the current's status. The pick-up of the CBFP is active unless the current is reduced below the setting limit and the primary stage tripping signal is reset. If either of these conditions is met (i.e. the current is above the limit or the signal is active) for the duration of the set RETRIP time delay, a RETRIP signal is sent to the redundant trip coil. If either of the conditions is active for the duration of the set CBFP time delay, a CBFP signal is sent to the incoming feeder circuit breaker. If the primary protection function clears the fault, both counters (RETRIP and CBFP) are reset as soon as the measured current is below the threshold settings and the tripping signal is reset. This configuration allows the CBFP to be controlled with current-based functions alone, with added security from current monitoring. Other function trips can also be included in the CBFP functionality.

Trip and CBFP in the device configuration

Figure. 4.5.12 - 88. Wiring diagram when Trip and CBFP are configured to the device.

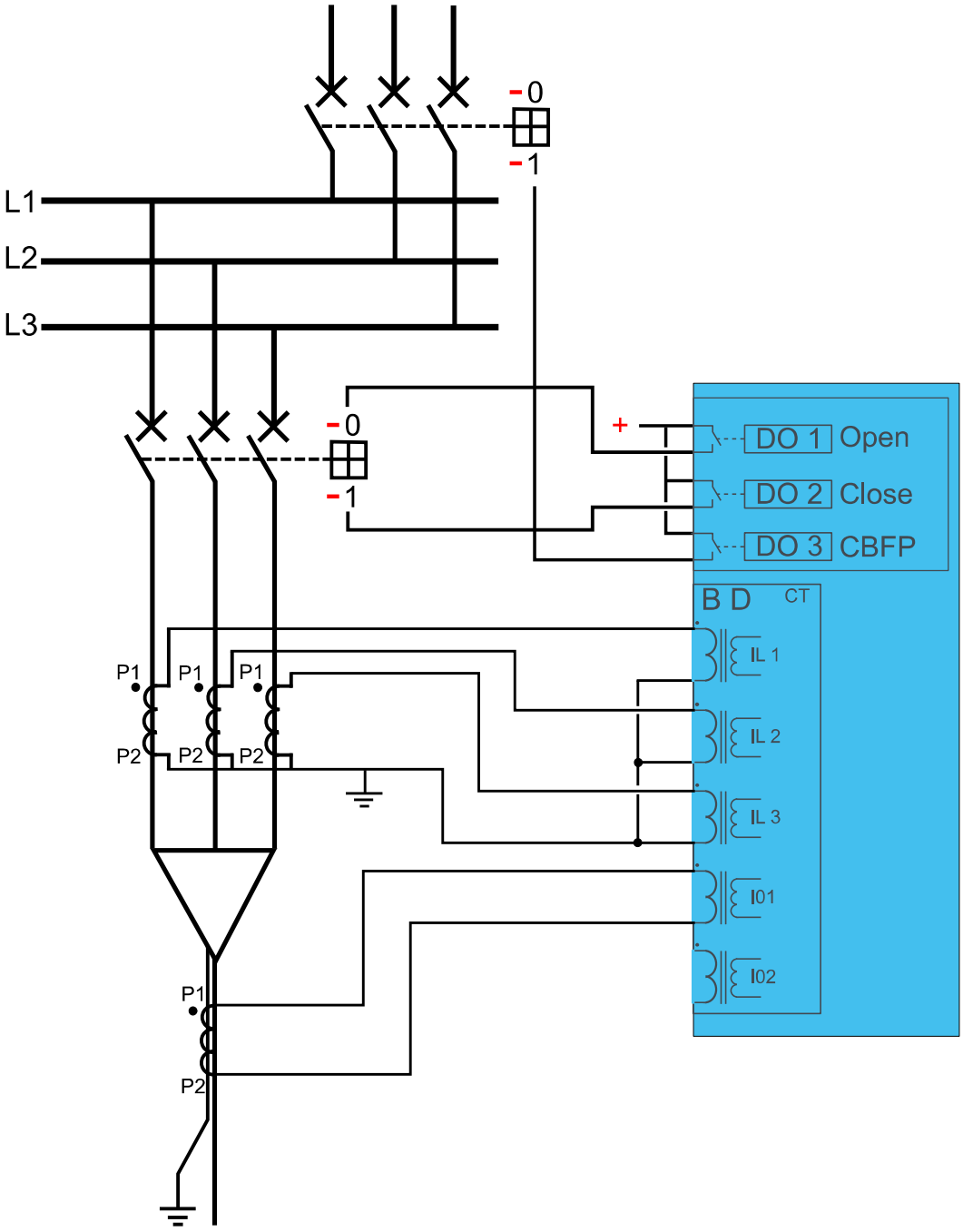

Probably the most common application is when the device's trip output controls the circuit breaker trip coil, while one dedicated CBFP contact controls the CBFP function. Below are a few operational cases regarding the various applications and settings of the CBFP function.

© Arcteq Relays Ltd

Figure. 4.5.12 - 89. CBFP when "Current" is the selected criterion.

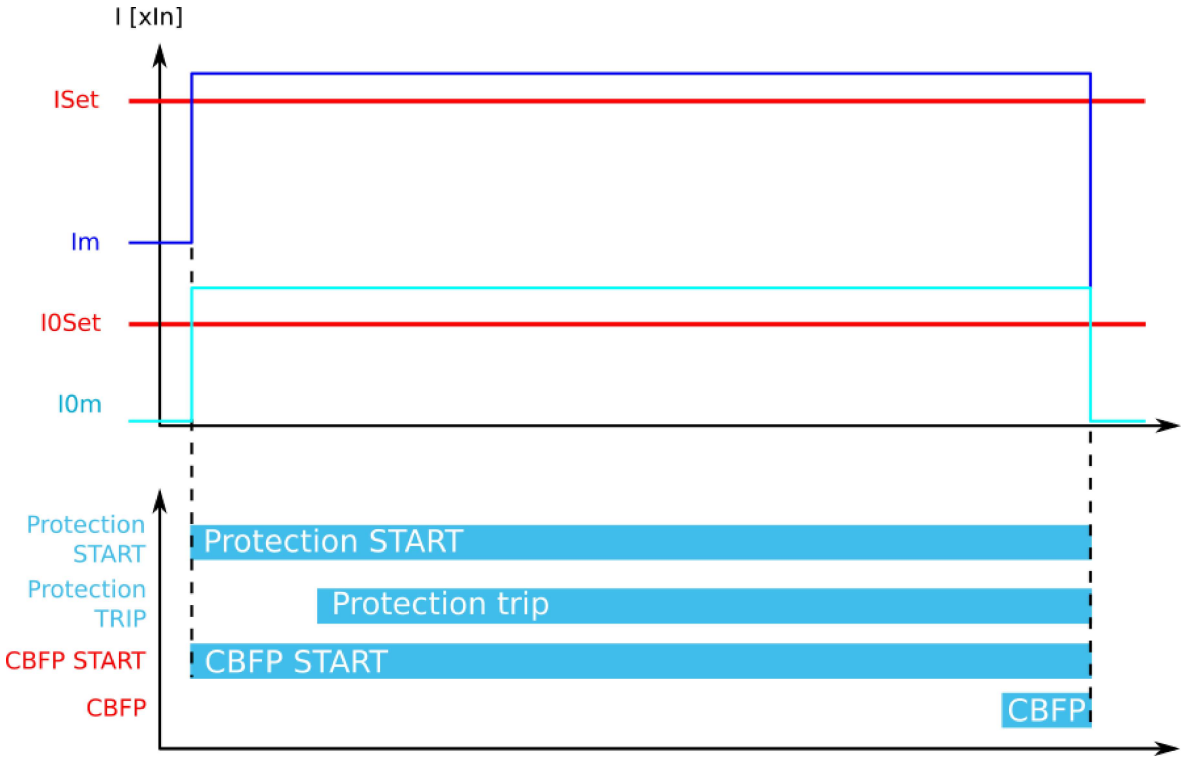

When the current threshold setting of I_{set} and/or $I0_{set}$ is exceeded, the current-based protection is activated and the counter for CBFP starts calculating the set operating time. The tripping of the primary protection stage is not monitored in this configuration. Therefore, if the current is not reduced below the setting limit, a CBFP signal is sent to the incoming feeder circuit breaker. If the primary protection function clears the fault, the counter for CBFP resets as soon as the measured current is below the threshold settings.

Figure. 4.5.12 - 90. CBFP when "Current and DO" is the selected criterion.

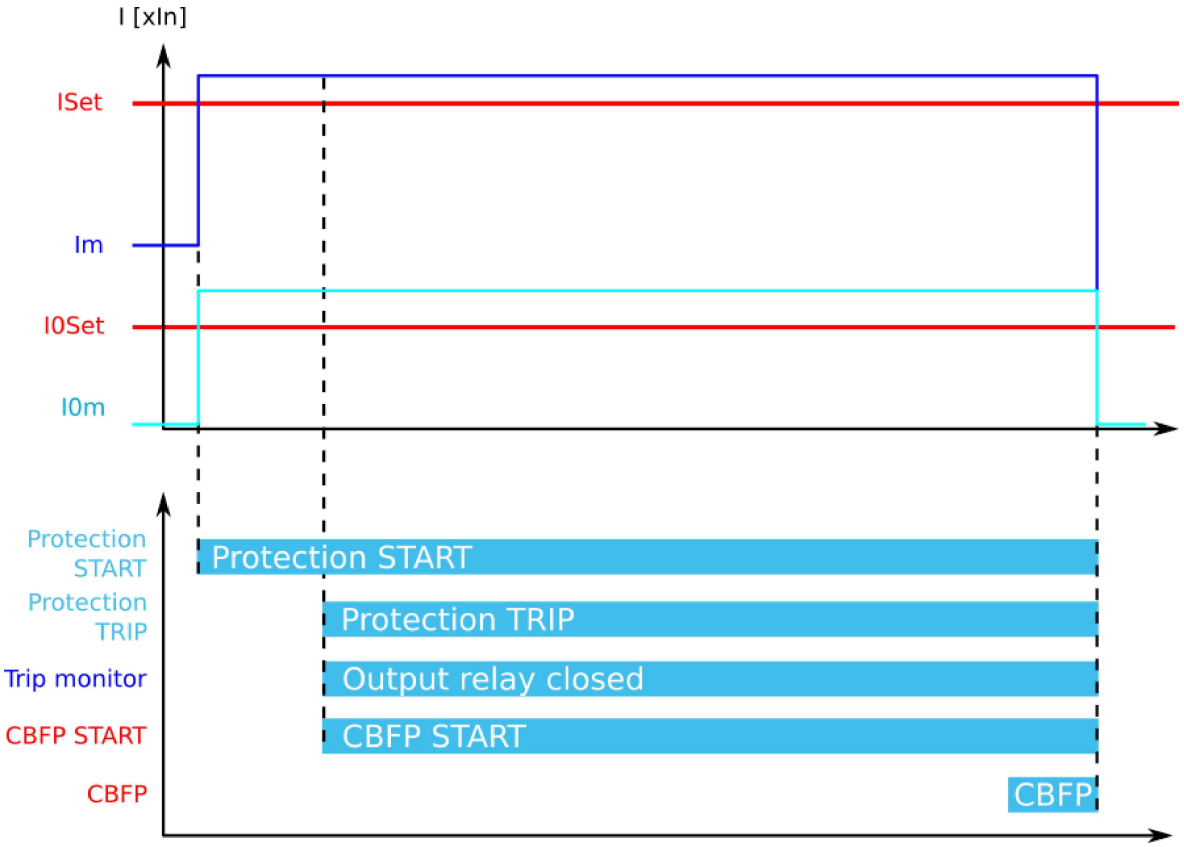

When the current threshold setting of I_{set} and/or $I0_{set}$ is exceeded, the current-based protection is activated. At the same time, the counter for CBFP is halted until the monitored output contact is controlled (that is, until the primary protection operates). When the tripping signal reaches the primary protection stage, the CBFP counter starts calculating the set operating time. The tripping of the primary protection stage is constantly monitored in this configuration. If the current is not reduced below the setting limit or the primary stage tripping signal is not reset, a CBFP signal is sent to the incoming feeder circuit breaker. The time delay counter for CBFP is reset as soon as the measured current is below the threshold settings or the tripping signal is reset. This configuration allows the CBFP to be controlled by current-based functions alone, and other function trips can be excluded from the CBFP functionality.

© Arcteq Relays Ltd
IM00099

Figure. 4.5.12 - 91. CBFP when "Current or DO" is the selected criterion.

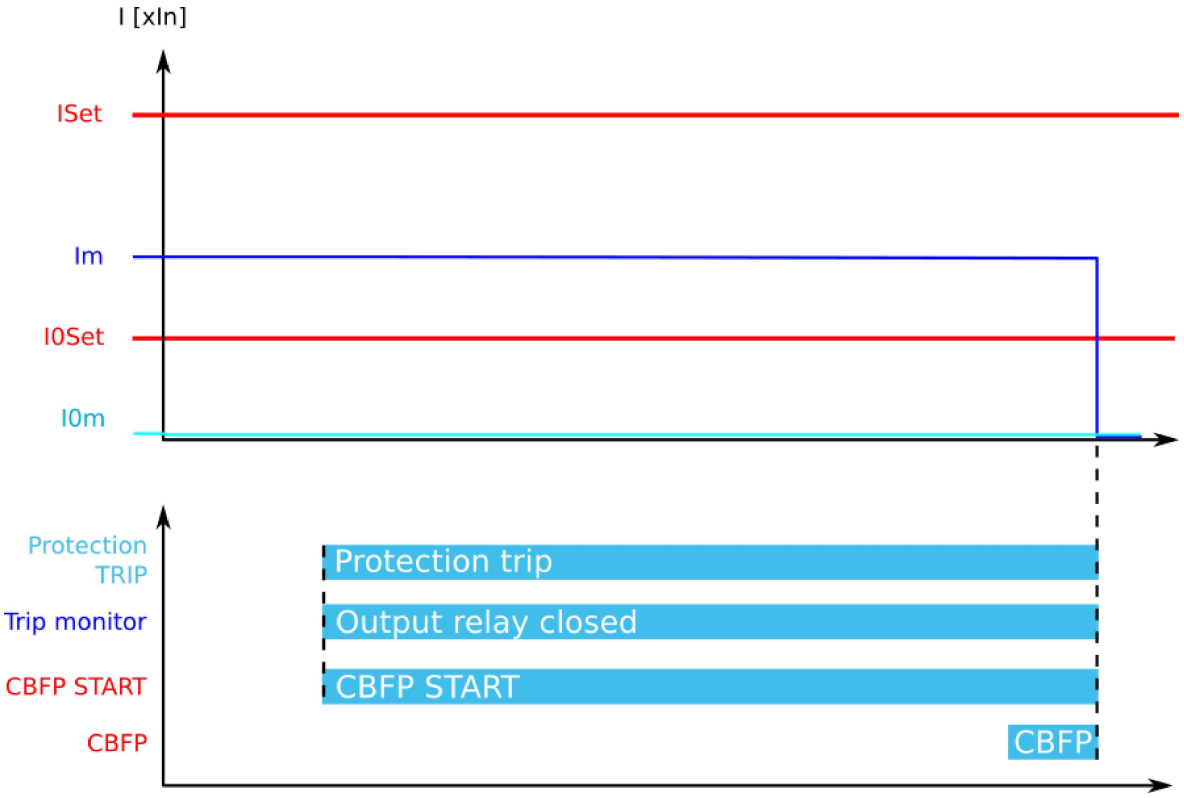

When the current threshold setting of I_{set} and/or $I0_{set}$ is exceeded, or the TRIP signal reaches the primary protection stage, the function starts counting down towards the CBFP signal. The tripping of the primary protection stage is constantly monitored in this configuration regardless of the current's status. The pick-up of the CBFP is active unless the current is reduced below the setting limit and the primary stage tripping signal is reset. If either of these conditions is met (i.e. the current is above the limit or the signal is active) for the duration of the set CBFP time delay, a CBFP signal is sent to the incoming feeder circuit breaker. The time delay counter for CBFP is reset as soon as the measured current is below the threshold settings and the tripping signal is reset. This configuration allows the CBFP to be controlled by current-based functions alone, with added security from current monitoring. Other function trips can also be included to the CBFP functionality.

Device configuration as a dedicated CBFP unit

Figure. 4.5.12 - 92. Wiring diagram when the device is configured as a dedicated CBFP unit.

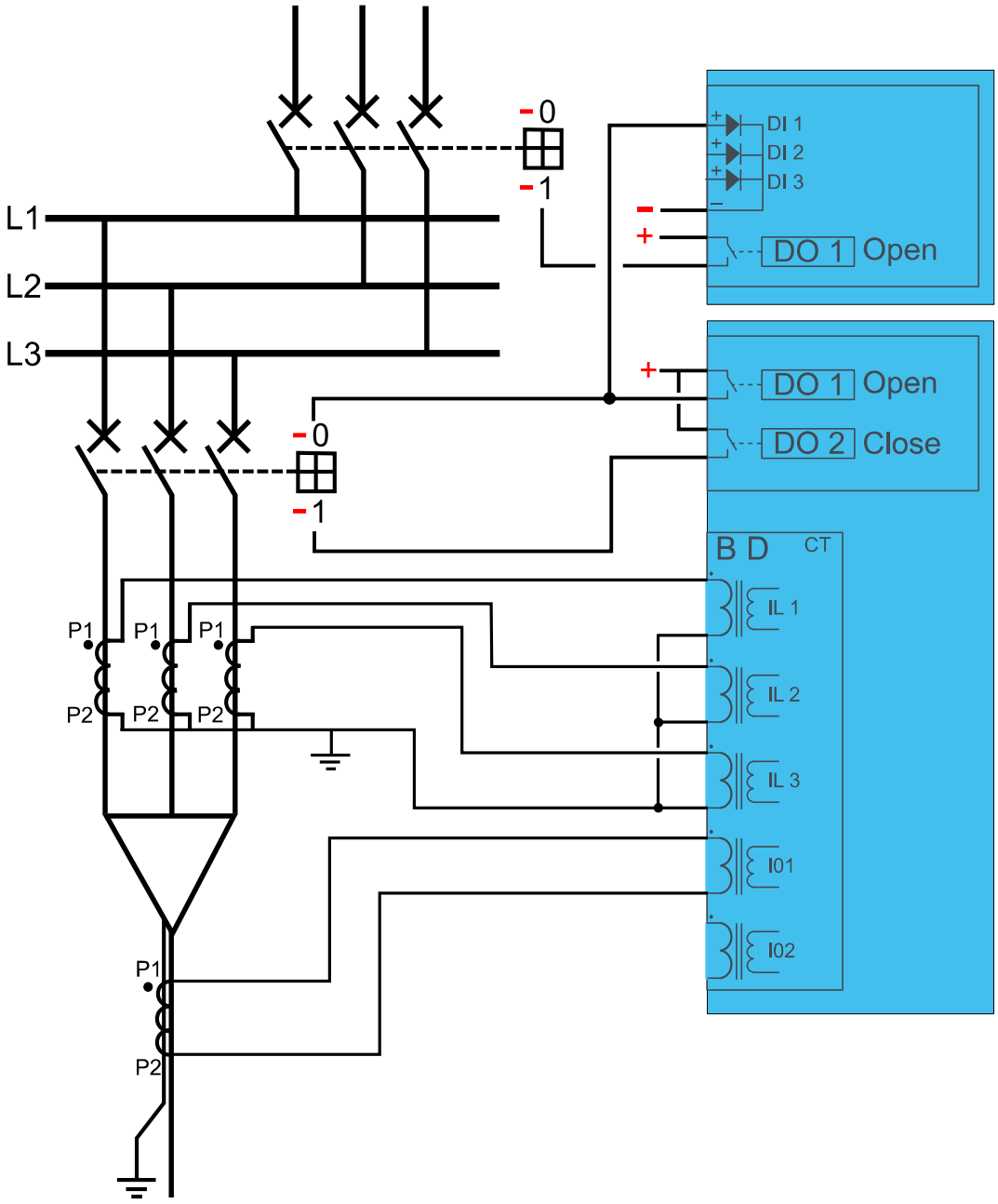

Some applications require a dedicated circuit breaker protection unit. When the CBFP function is configured to operate with a digital input signal, it can be used in these applications. When a device is used for this purpose, the tripping signal is wired to the device's digital input and the device's own TRIP signal is used only for the CBFP purpose. In this application's incoming feeder the RETRIP and CBFP signals are also available with different sets of requirements. The RETRIP signal can be used for tripping the section's feeder breaker and the CBFP signal for tripping the incoming feeder. The following example does not use retripping and the CBFP signal is used as the incoming feeder trip from the outgoing breaker trip signal. The TRIP signal can also be transported between different devices by using GOOSE messages.

© Arcteq Relays Ltd

Figure. 4.5.12 - 93. Dedicated CBFP operation from digital input signal.

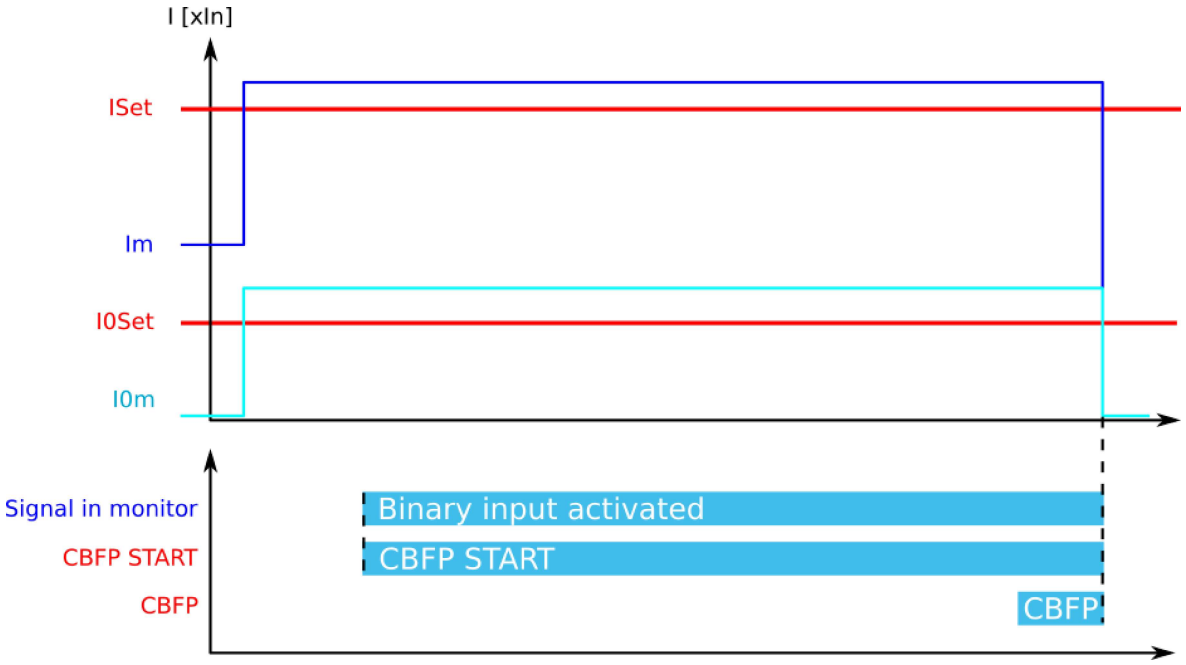

In this mode the CBFP operates only from a digital input signal. Both current and output relay monitoring can be used. The counter for the CBFP signal begins when the digital input is activated. If the counter is active until the CBFP counter is used, the device issues a CBFP command to the incoming feeder circuit breaker. In this application the device tripping signals from all outgoing feeders can be connected to one, dedicated CBFP device which operates either on current-based protection or on all possible faults' CBFP protection.

Events and registers

The circuit breaker failure protection function (abbreviated "CBF" in event block names) generates events and registers from the status changes in the events listed below. The user can select which event messages are stored in the main event buffer: ON, OFF, or both. The events triggered by the function are recorded with a time stamp.

The function's outputs can be used for direct I/O controlling and user logic programming. The function also provides a resettable cumulative counters for RETRIP, CBFP, CBFP START and BLOCKED events.

Table. 4.5.12 - 236. Event messages.

Event block name	Event names
CBF1	Start ON/OFF
CBF1	Retrip ON/OFF
CBF1	CBFP ON/OFF
CBF1	Block ON/OFF
CBF1	DO monitor ON/OFF
CBF1	Signal ON/OFF
CBF1	Phase current ON/OFF
CBF1	Res current ON/OFF

The function registers its operation into the last twelve (12) time-stamped registers. The register of the function records the ON event process data for ACTIVATED, BLOCKED, etc. The table below presents the structure of the function's register content.

Table. 4.5.12 - 237. Register content.

Register	Description
Date and time	dd.mm.yyyy hh:mm:ss.mss
Event	Event name
Max phase current	Highest phase current
Residual current	I01, I02 channel or calculated residual current
Time to RETR	Time remaining to retrip activation
Time to CBFP	Time remaining to CBFP activation
Setting group in use	Setting group 1...8 active

4.5.13 Low-impedance or high-impedance restricted earth fault/ cable end differential protection (I0d>; 87N)

The low-impedance or high-impedance restricted earth fault function is used for residual differential current measurement for transformers. This function can also be used as the cable end differential function. The operating principle is low-impedance differential protection with bias characteristics the user can set. A differential current is calculated with the sum of the phase currents and the selected residual current input. In cable end differential mode the function provides natural measurement unbalance compensation for higher operating sensitivity in monitoring cable end faults.

The restricted earth fault function constantly monitors phase currents and selected residual current instant values as well as calculated bias current and differential current magnitudes.

Measured input

The function block uses fundamental frequency component of phase current and resisual current measurement values. Both calculated residual currents and measured residual currents are always used. The user can select either I_{01} or I_{02} for residual current measurement.

Please note that when the function is in cable end differential mode, the difference is only calculated when the measured I_0 current is available.

Table. 4.5.13 - 238. Measurement inputs of the I0d> function.

Signal	Description
I_{L1}RMS	Fundamental frequency component of phase L1 (A) current measurement
I_{L2}RMS	Fundamental frequency component of phase L2 (B) current measurement
I_{L3}RMS	Fundamental frequency component of phase L3 (C) current measurement
I_{01}RMS	Fundamental frequency component of residual input I01 measurement
I_{02}RMS	Fundamental frequency component of residual input I02 measurement

© Arcteq Relays Ltd

Signal	Description
I_{L1}Ang	Angle of phase L1 (A) current
I_{L2} Ang	Angle of phase L2 (B) current
I_{L3} Ang	Angle of phase L3 (C) current
I_{01} Ang	Angle of residual input I01
I_{02} Ang	Angle of residual input I02

General settings

The following general settings define the general behavior of the function. These settings are static i.e. it is not possible to change them by editing the setting group.

Table. 4.5.13 - 239. General settings.

Name	Range	Default	Description
I0d> LN mode	• On • Blocked • Test • Test/ Blocked • Off	On	Set mode of NOC block. This parameter is visible only when *Allow setting of individual LN mode* is enabled in *General* menu.
I0d> force status to	• Normal • Trip • Blocked	Normal	Force the status of the function. Visible only when *Enable stage forcing* parameter is enabled in *General* menu.
I0d> in side	• Side 1 • Side 2 • Side 3	Side 1	Defines which current measurement module is used by the function.
Restricted earth fault (REF) or Cable End Differential	• REF • CED	REF	Selection of the operating characteristics. If REF is selected, the function operates with normal accuracies. If CED is selected, the natural unbalance created by the phase current CT:s can be compensated for more sensitive operation. The default setting is REF.
Compenstate natural unbalance	• - • Comp	-	When activated while the line is energized, the currently present calculated residual current is compensated to 0. This compensation only has an effect in the CED mode.

Operating characteristics

The current-dependent pick-up and activation of the function are controlled by setting parameters, which define the current calculating method used as well as the operating characteristics.

Setting group selection controls the operating characteristics of the function, i.e. the user or user-defined logic can change function parameters while the function is running.

Table. 4.5.13 - 240. Pick-up settings.

Name	Range	Step	Default	Description
I0 Input	• I01 • I02	-	I01	Selection of the used residual current measurement input.
I0 Direction	• Add • Subtract	-	Add	Differential current calculation mode. This matches the directions of the calculated and measured residual currents to the application. The default setting (Add) means that I0Calc + I01 or I0Calc + I02 in a through fault yields no differential current. See figures below for connection examples.
Bias current calculation	• Residual current (3I0 + I0Calc)/2 • Maximum (Phase and I0 max)	-	Residual current	Selection of the bias current calculation. Differential characteristics biasing can use either the calculated residual current averages or the maximum of all measured currents. The residual current mode is more sensitive while the maximum current is coarser.
I0d> pick-up	0.01…50.00% (of I_n)	0.01%	10%	Setting for basic sensitivity of the differential characteristics.
Turnpoint 1	0.01…50.00×I_n	0.01×I_n	1.00×I_n	Setting for first turn point in the bias axe of the differential characteristics.
Slope 1	0.01…150.00%	0.01%	10.00%	Setting for the first slope of the differential characteristics.
Turnpoint 2	0.01…50.00×I_n	0.01×I_n	3.00×I_n	Setting for second turn point in the bias axe of the differential characteristics.
Slope 2	0.01…250.00%	0.01%	40.00%	Setting for the second slope of the differential characteristics.

Figure. 4.5.13 - 94. "I0 direction" parameter must be set to "Subtract" when current transformers are facing the same direction.

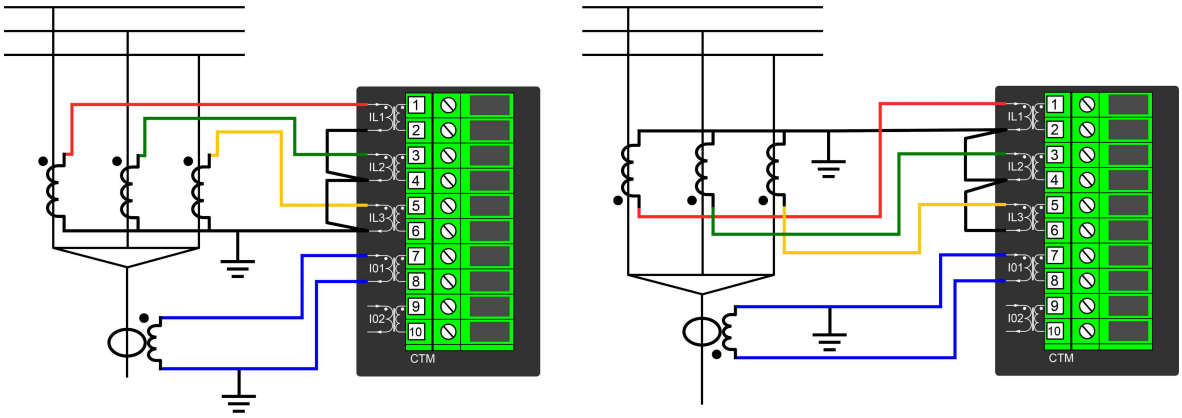

© Arcteq Relays Ltd

Figure. 4.5.13 - 95. "I0 direction" parameter must be set to "Add" when current transformers are facing each other or away from each other.

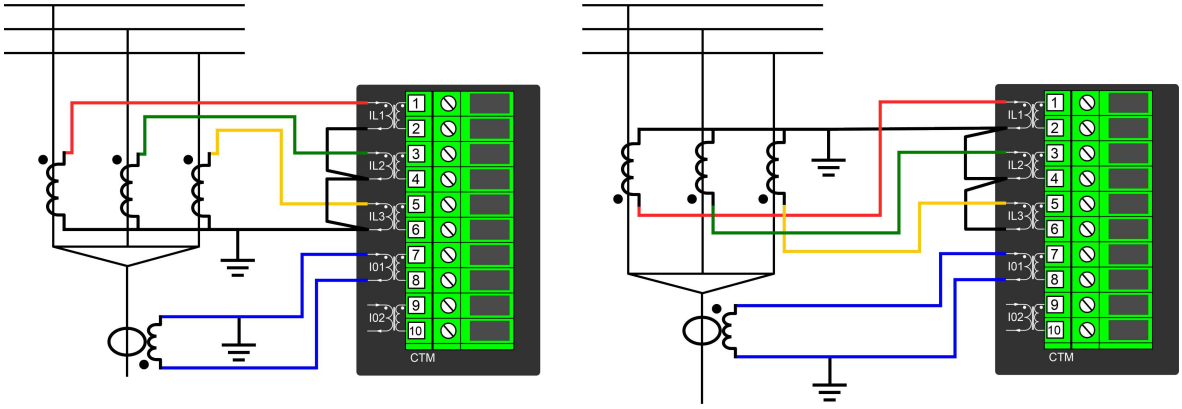

The following figure presents the differential characteristics with default settings.

Figure. 4.5.13 - 96. Differential characteristics for the I0d> function with default settings.

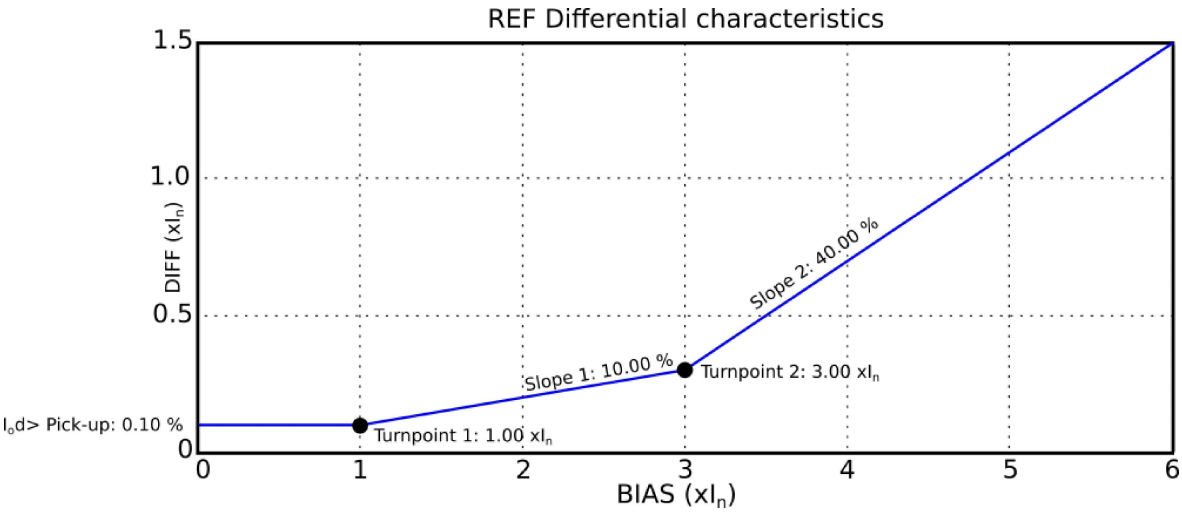

The equations for the differential characteristics are the following:

Figure. 4.5.13 - 97. Differential current (the calculation is based on user-selected inputs and direction).

$$I_{Diff+I01} = \left(\overline{IL1} + \overline{IL2} + \overline{IL3}\right) + \overline{I01}$$

$$I_{Diff-I01} = \left(\overline{IL1} + \overline{IL2} + \overline{IL3}\right) - \overline{I01}$$

$$I_{Diff+I02} = \left(\overline{IL1} + \overline{IL2} + \overline{IL3}\right) + \overline{I02}$$

$$I_{Diff-I02} = \left(\overline{IL1} + \overline{IL2} + \overline{IL3}\right) - \overline{I02}$$

Figure. 4.5.13 - 98. Bias current (the calculation is based on the user-selected mode).

$$I_{Bias\ average\ I01} = \frac{|\overline{IL1} + \overline{IL2} + \overline{IL3}| + |\overline{I01}|}{2}$$

$$I_{Bias\ average\ I02} = \frac{|\overline{IL1} + \overline{IL2} + \overline{IL3}| + |\overline{I02}|}{2}$$

$$I_{Bias\ \max I01} = MAX(|IL1|, |IL2|, |IL3|, |I01|)$$

$$I_{Bias\ \max I01} = MAX(|IL1|, |IL2|, |IL3|, |I02|)$$

Figure. 4.5.13 - 99. Characteristics settings.

$$Diff_{bias<TP1} = I0_{d>pick-up}$$

$$Diff_{biasTP1...TP2} = SL1 \times (Ix - TP1) + I0_{d>pick-up}$$

$$Diff_{bias>TP2} = SL2 \times (Ix - TP2) + SL1 \times (TP2 - TP1) + I0_{d>pick-up}$$

Read-only parameters

The function's *Info* page displays useful, real-time information on the state of the protection function. It is accessed either through the device's HMI display, or through the setting tool software when it is connected to the device and its Live Edit mode is active.

Table. 4.5.13 - 241. Information displayed by the function.

Name	Range	Description
I0d> LN behaviour	• On • Blocked • Test • Test/ Blocked • Off	Set mode of REF block. This parameter is visible only when *Allow setting of individual LN mode* is enabled in *General* menu.
I0d> condition	• Normal • Trip • Blocked	Displays the status of the protection function.

Function blocking

The block signal is checked in the beginning of each program cycle. The blocking signal is received from the blocking matrix in the function's dedicated input. If the blocking signal is not activated when the pick-up element activates, a TRIP signal is generated and the function proceeds to the time characteristics calculation.

If the blocking signal is active when the pick-up element activates, a BLOCKED signal is generated and the function does not process the situation further. If the TRIP function has been activated before the blocking signal, it resets and processes the release time characteristics similarly to when the pick-up signal is reset.

The variables the user can set are binary signals from the system. The blocking signal needs to reach the device minimum of 5 ms before the set operating delay has passed in order for the blocking to activate in time.

© Arcteq Relays Ltd

The following figures present some typical applications for this function.

Figure. 4.5.13 - 100. Cable end differential with natural unbalance in the phase current measurement.

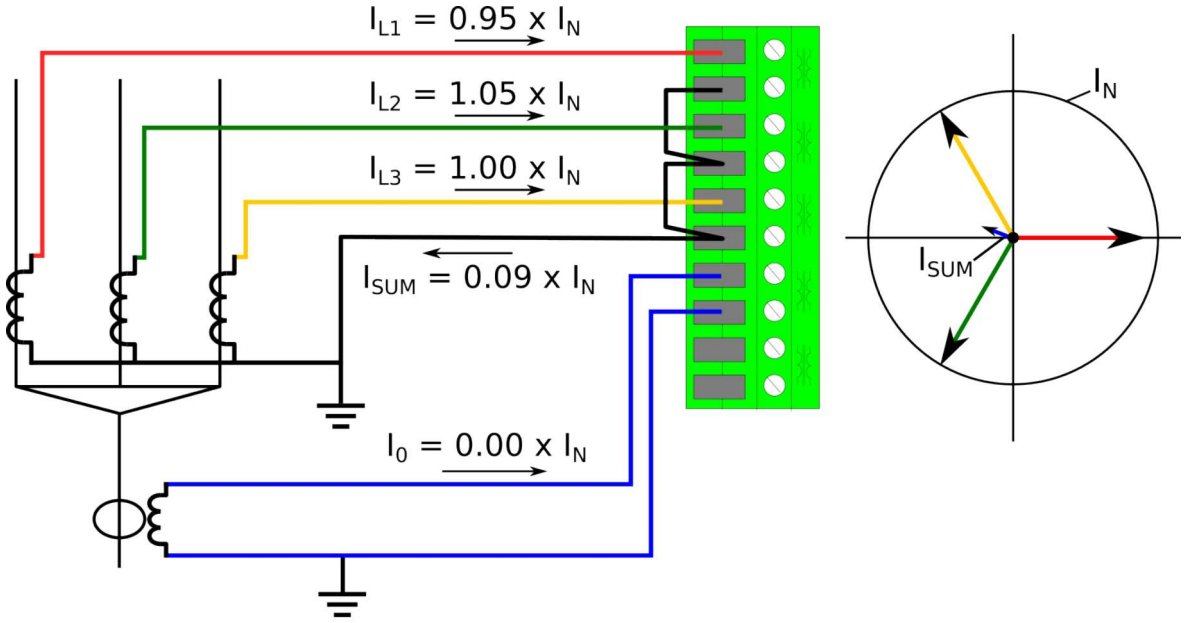

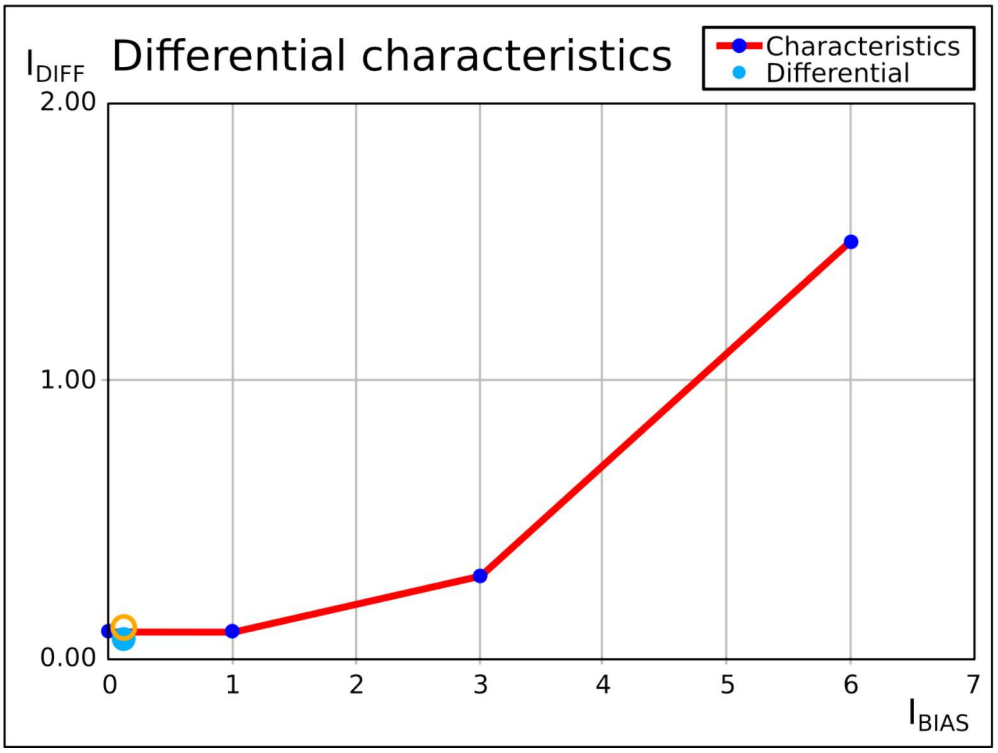

When calculating residual current from the phase currents, the natural unbalance can be around 10 % while the used CTs are still within the promised 5P class (which is probably the most common CT accuracy class). When the current natural unbalance is compensated in this situation, the differential settings may be set to be more sensitive and the natural unbalance does not, therefore, affect the calculation.

Figure. 4.5.13 - 101. Cable end differential when a fault occurs.

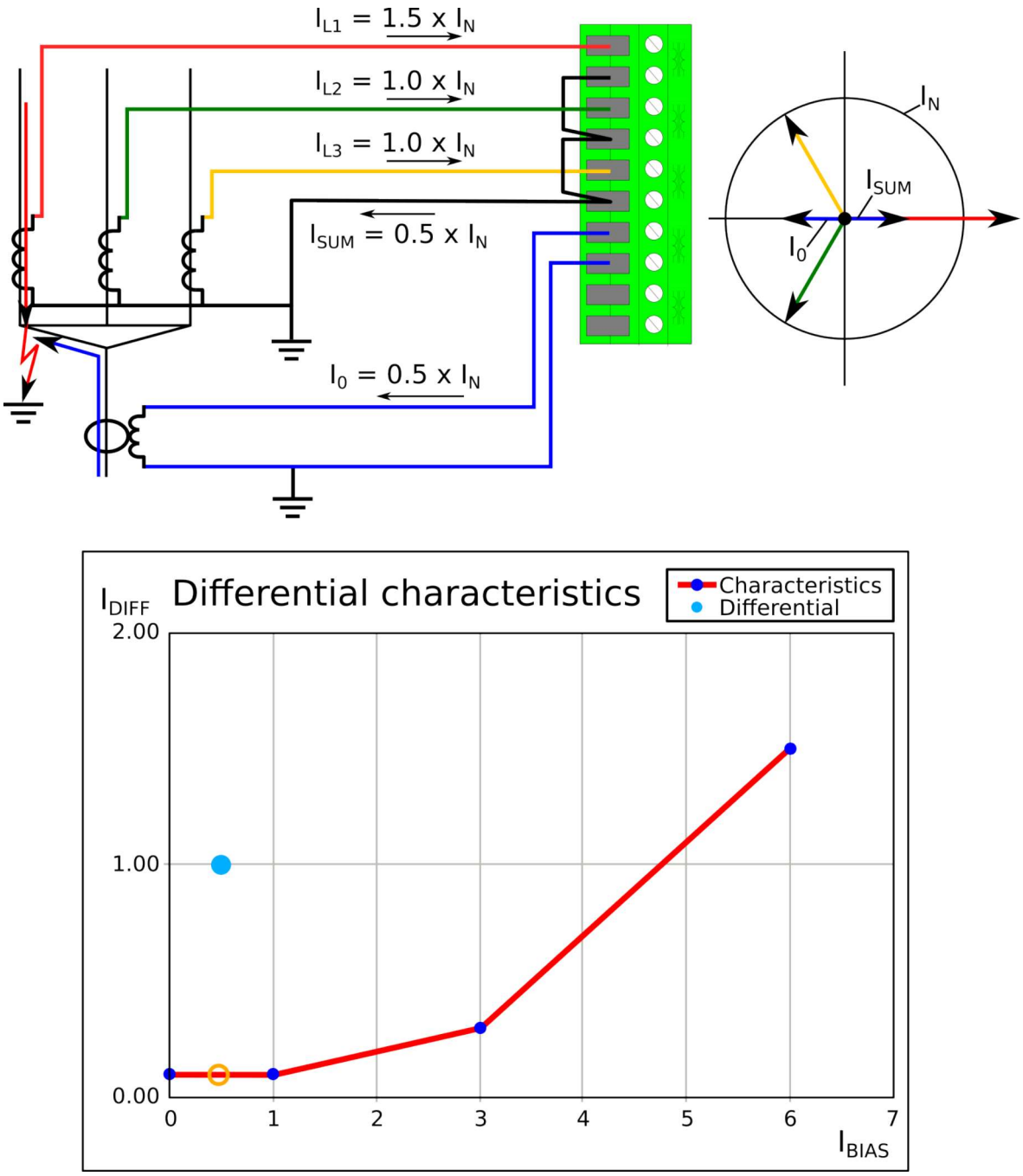

If a starting fault occurs in the cable end, the CED mode catches the difference between the ingoing and the outgoing residual currents. The resulting signal can be used for alarming or tripping purposes for the feeder with the failing cable end. The user can freely change both the settings and the sensitivity of the algorithm.

Restricted earth fault protection is usually used in the Y winding of a power transformer. This function is needed to prevent the main differential protection from being tripped by faults occurring outside the protection area; in some cases, the function has to be disabled or its sensitivity limited to catch earth faults inside the protection area. For this purpose, the restricted earth fault function is stable since it only monitors the side it is wired to, and compares the calculated and measured residual currents. During an outside earth fault the circulating residual current in the faulty phase winding does not cause a trip because the comparison of the measured starpoint current and the calculated residual current differential is close to zero.

© Arcteq Relays Ltd

Figure. 4.5.13 - 102. Restricted earth fault outside a Y winding transformer.

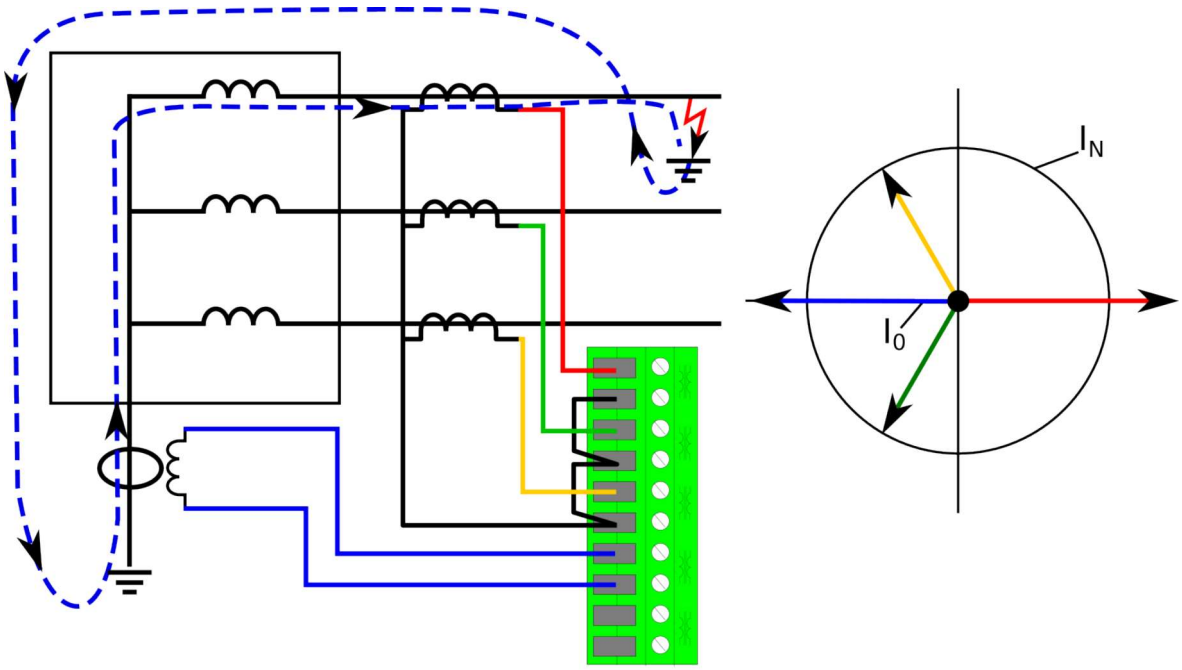

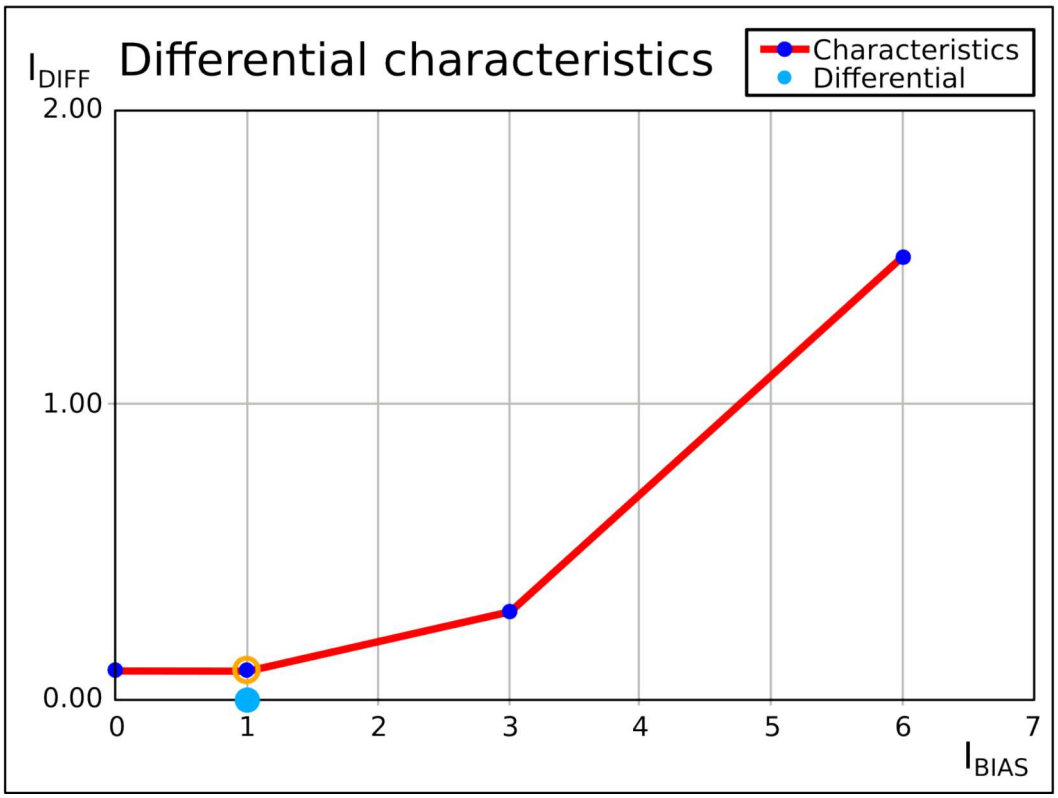

If the fault is located inside of the transformer and thus inside of the protection area, the function catches the fault with high sensitivity. Since the measured residual current now flows in the opposite direction than in the outside fault situation, the measured differential current is high.

Figure. 4.5.13 - 103. Restricted earth fault inside a Y winding transformer.

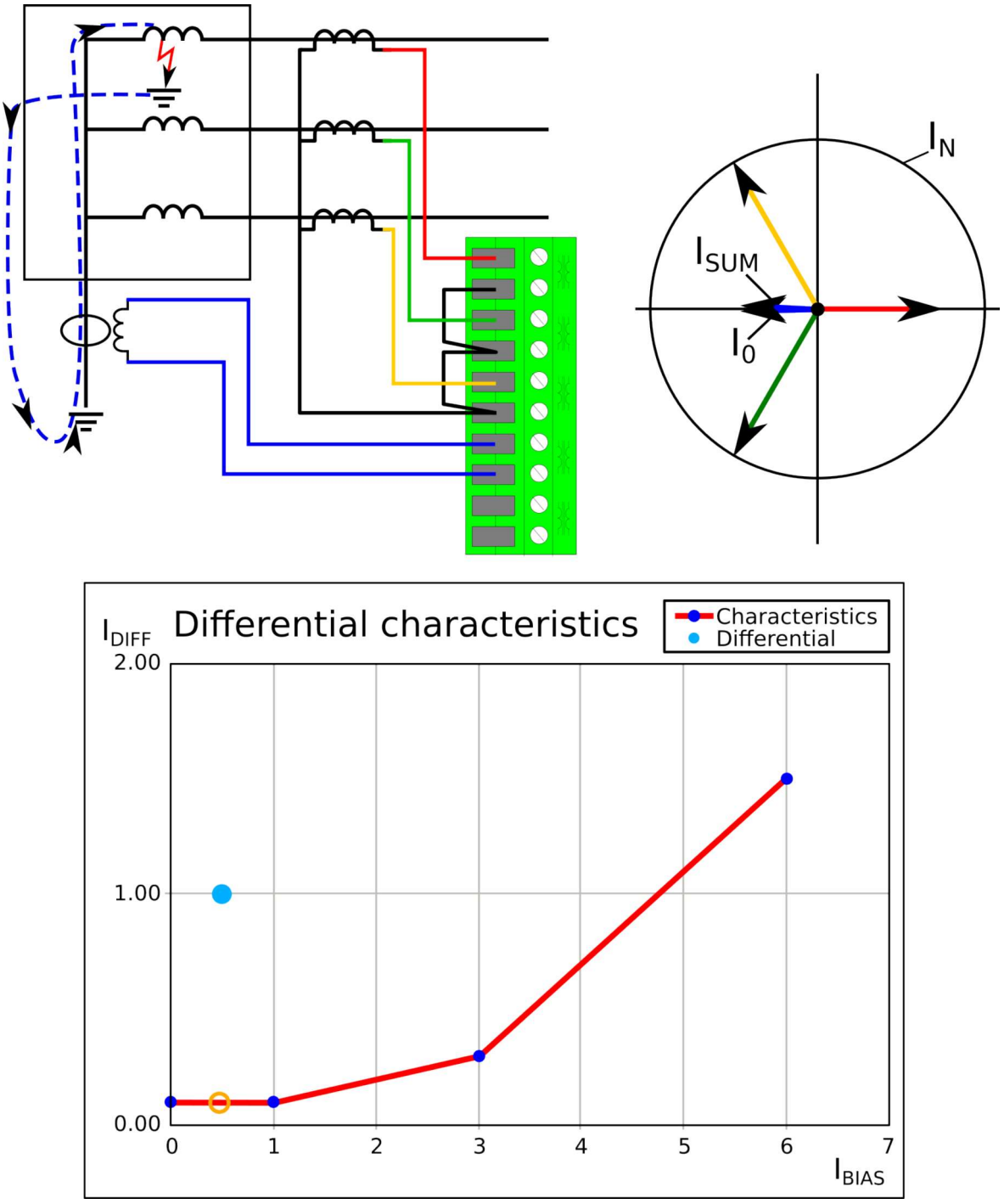

Events and registers

The restricted earth fault function (abbreviated "REF" in event block names) generates events and registers from the status changes in the events listed below. The user can select which event messages are stored in the main event buffer: ON, OFF, or both. The events triggered by the function are recorded with a time stamp.

The function's outputs can be used for direct I/O controlling and user logic programming. The function also provides a resettable cumulative counter for the TRIP and BLOCKED events.

© Arcteq Relays Ltd

Table. 4.5.13 - 242. Event messages.

Event block name	Event names
REF1	I0d> (87N) Trip ON/OFF
REF1	I0d> (87N) Block ON/OFF

The function registers its operation into the last twelve (12) time-stamped registers. The register of the function records the ON event process data for ACTIVATED, BLOCKED, etc. The table below presents the structure of the function's register content.

Table. 4.5.13 - 243. Register content.

Register	Description
Date and time	dd.mm.yyyy hh:mm:ss.mss
Event	Event name
Trigger currents	• Biascurrent • Diffcurrent • Characteristics diff
Maximum trigger currents	• Biascurrent max • Diffcurrent max • Characteristics diff max
Residual currents	• I0Calc • I0 meas
Setting group in use	Setting group 1...8 active

4.5.14 Overvoltage protection (U>; 59)

The overvoltage function is used for instant and time-delayed overvoltage protection. Devices with a voltage protection module has four (4) available stages of the function (U>, U>>, U>>>, U>>>>). The function constantly measures phase voltage magnitudes or line-to-line magnitudes.

Measured input

The function block uses fundamental frequency component of line-to-line or line-to-neutral (as the user selects). If the protection is based on line-to-line voltage, overvoltage protection is not affected by earth faults in isolated or compensated networks.

Table. 4.5.14 - 244. Measurement input of the U> function.

Signal	Description
U_{L12}RMS	Fundamental frequency component of U_{L12}/V voltage measurement
U_{L23}RMS	Fundamental frequency component of U_{L23}/V voltage measurement
U_{L31}RMS	Fundamental frequency component of U_{L31}/V voltage measurement
U_{L1}RMS	Fundamental frequency component of U_{L1}/V voltage measurement

Signal	Description
U_{L2}RMS	Fundamental frequency component of U_{L2}/V voltage measurement
U_{L3}RMS	Fundamental frequency component of U_{L3}/V voltage measurement

Table. 4.5.14 - 245. Measured magnitude selection settings.

Name	Range	Default	Description
Measured magnitude	• P-P voltages • P-E voltages • U3 input (2LL-U3SS) • U4 input (SS)	P-P voltages	Selection of phase-to-phase or phase-to-earth voltages. Additionally, the U3 or U4 input can be assigned as the voltage channel to be supervised.

Figure. 4.5.14 - 104. Selectable measurement magnitudes with 3LN+U4 VT connection.

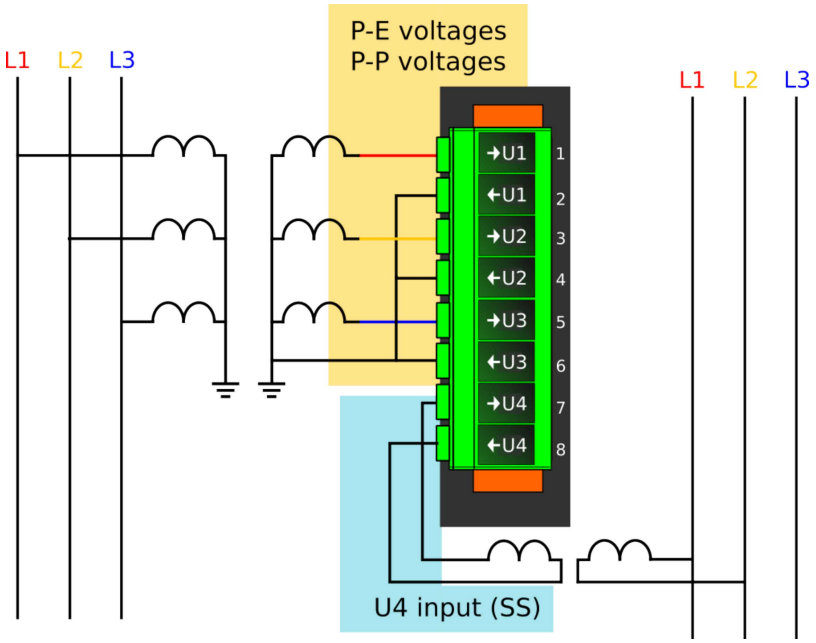

© Arcteq Relays Ltd

Figure. 4.5.14 - 105. Selectable measurement magnitudes with 3LL+U4 VT connection (P-E voltages not available without residual voltage).

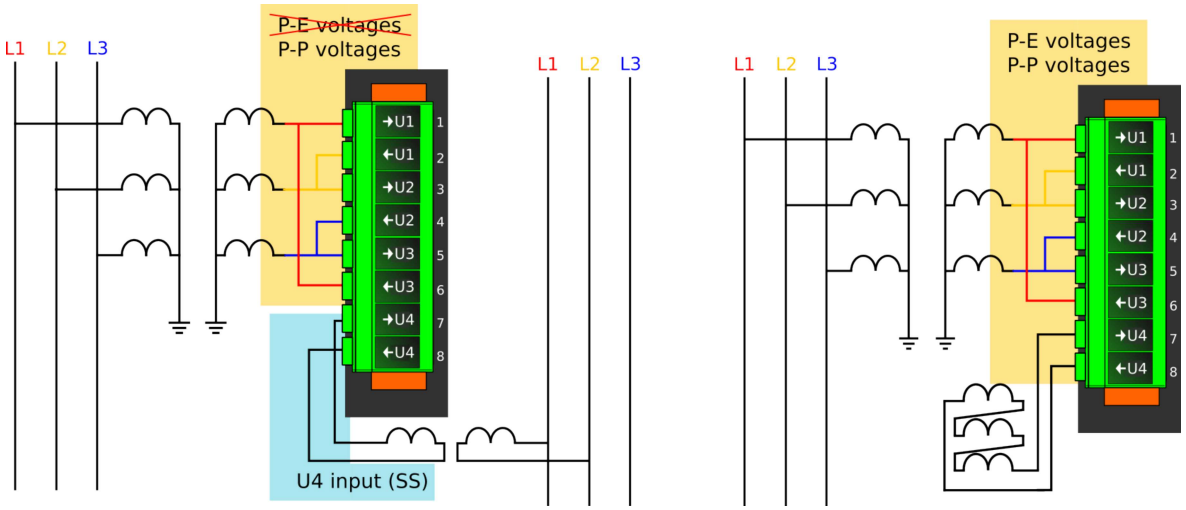

Figure. 4.5.14 - 106. Selectable measurement magnitudes with 2LL+U3+U4 VT connection (P-E voltages not available without residual voltage).

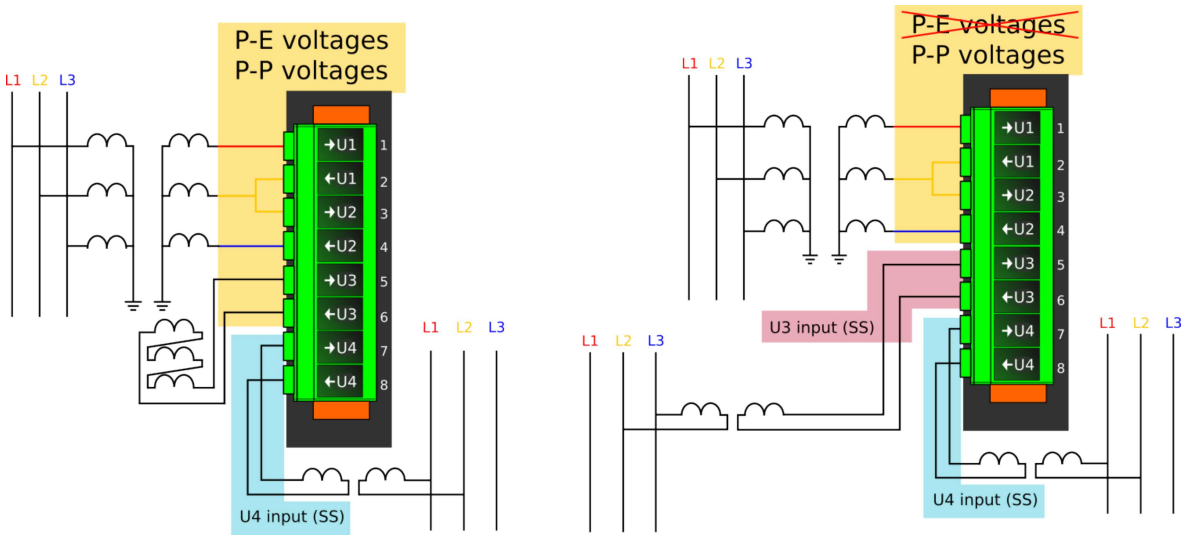

P-P Voltages and *P-E Voltages* selections follow phase-to-neutral or phase-to-phase voltages in the first three voltage channels (or two first voltage channels in the 2LL+U3+U4 mode). *U4 input* selection follows the voltage in Channel 4. *U3Input* selection only follows the voltage in Channel 3 if the 2LL+U3+U4 mode is in use.

General settings

The following general settings define the general behavior of the function. These settings are static i.e. it is not possible to change them by editing the setting group.

Table. 4.5.14 - 246. General settings of the function.

Name	Range	Default	Description
U> LN mode	• On • Blocked • Test • Test/ Blocked • Off	On	Set mode of OV block. This parameter is visible only when *Allow setting of individual LN mode* is enabled in *General* menu.
U> force status to	• Normal • Start • Trip • Blocked	Normal	Force the status of the function. Visible only when *Enable stage forcing* parameter is enabled in *General* menu.

Pick-up settings

The U_{set} setting parameter controls the pick-up of the U> function. This defines the maximum allowed measured voltage before action from the function. The function constantly calculates the ratio between the U_{set} and the measured magnitude (U_m) for each of the three voltages. The reset ratio of 97 % is built into the function and is always relative to the U_{set} value. The setting value is common for all measured amplitudes, and when the U_m exceeds the U_{set} value (in single, dual or all voltages) it triggers the pick-up operation of the function.

Setting group selection controls the operating characteristics of the function, i.e. the user or user-defined logic can change function parameters while the function is running.

Table. 4.5.14 - 247. Pick-up settings.

Name	Range	Step	Default	Description
Operation mode	• 1 voltage • 2 voltages • 3 voltages	-	1 voltage	Pick-up criteria selection
U_{set}	0.01…250.00%U_n	0.01%U_n	105%U_n	Pick-up setting

Read-only parameters

The function's *Info* page displays useful, real-time information on the state of the protection function. It is accessed either through the device's HMI display, or through the setting tool software when it is connected to the device and its Live Edit mode is active.

Table. 4.5.14 - 248. Information displayed by the function.

Name	Range	Step	Description
U> LN behaviour	• On • Blocked • Test • Test/Blocked • Off	-	Displays the mode of OV block. This parameter is visible only when *Allow setting of individual LN mode* is enabled in *General* menu.

© Arcteq Relays Ltd

Name	Range	Step	Description
U< pick-up setting	0.0...1 000 000.0V	0.1V	The primary voltage required for tripping. The displayed pick-up voltage level depends on the pick-up setting and the voltage transformer settings.
Expected operating time	0.000...1800.000s	0.005s	Displays the expected operating time when a fault occurs. When IDMT mode is used, the expected operating time depends on the measured voltage value. If the measured voltage changes during a fault, the expected operating time changes accordingly.
Time remaining to trip	-1800.000...1800.000s	0.005s	When the function has detected a fault and counts down time towards a trip, this displays how much time is left before tripping occurs.
$U_{A(B)\,meas}/U_{set}$ at the moment	0.00...1250.00U_m/U_{set}	0.01U_m/U_{set}	The ratio between U_A or U_{AB} voltage and the pick-up value.
$U_{B(c)\,meas}/U_{set}$ at the moment	0.00...1250.00U_m/U_{set}	0.01U_m/U_{set}	The ratio between U_B or U_{BC} voltage and the pick-up value.
$U_{C(A)\,meas}/U_{set}$ at the moment	0.00...1250.00U_m/U_{set}	0.01U_m/U_{set}	The ratio between U_C or U_{CA} voltage and the pick-up value.
U_{meas}/U_{set} at the moment	0.00...1250.00U_m/U_{set}	0.01U_m/U_{set}	The ratio between the measured voltage and the pick-up value.

Function blocking

The blocking signal is evaluated at the start of each program cycle. The blocking signals are connected to the function's dedicated input, which can be configured in the *IO → Blocking Input Control* tab of the function.

- When the pick-up element activates and the blocking signal is not active, a START signal is generated, and the function starts or continues with the trip time countdown.
- When the pick-up element activates and the blocking signal is active, a BLOCKED signal is generated, and the function does not process the event further.
- When a START signal is already active and the blocking input signal becomes active, the START signal is reset and BLOCKED signal is generated. The release time characteristics are then processed in the same way as when the pick-up signal is reset.

The blocking signal needs to reach the device minimum of 5 ms before the set operating delay has passed in order for the blocking to activate in time.

Operating time characteristics for trip and reset

The operating timers' behavior during a function can be set for TRIP signal and also for the release of the function in case the pick-up element is reset before the trip time has been reached. There are three basic operating modes available for the function:

- Instant operation: gives the TRIP signal with no additional time delay simultaneously with the START signal.

- Definite time operation (DT): gives the TRIP signal after a user-defined time delay regardless of the measured voltage as long as the voltage is above the U_{set} value and thus the pick-up element is active (independent time characteristics).
- Inverse definite minimum time (IDMT): gives the TRIP signal after a time which is in relation to the set pick-up voltage U_{set} and the measured voltage U_m (dependent time characteristics).

The IDMT function follows this formula:

$$t = \frac{k}{\left(\frac{Um}{Us}\right)^{a} - 1}$$

Where:

- t = operating time
- k = time dial setting
- U_m = measured voltage
- U_s = pick-up setting
- a = IDMT Multiplier setting

The following table presents the setting parameters for the function's time characteristics.

Table. 4.5.14 - 249. Setting parameters for operating time characteristics.

Name	Range	Step	Default	Description
Delay type	• DT • IDMT	-	DT	Selection of the delay type time counter. The selection possibilities are dependent (IDMT, Inverse Definite Minimum Time) and independent (DT, Definite Time) characteristics.
Definite operating time delay	0.000…800.000s	0.005s	0.040s	Definite time operating delay. The setting is active and visible when DT is the selected delay type. When set to 0.000 s, the stage operates as instant stage without added delay. When the parameter is set to 0.005...1800 s, the stage operates as independent delayed.
Time dial setting k	0.01…60.00s	0.01s	0.05s	This setting is active and visible when IDMT is the selected delay type. Time dial/multiplier setting for IDMT characteristics.
IDMT Multiplier	0.01…25.00s	0.01s	1.00s	This setting is active and visible when IDMT is the selected delay type. IDMT time multiplier in the U_m/U_{set} power.

Table. 4.5.14 - 250. Setting parameters for reset time characteristics.

Name	Range	Step	Default	Description
Release time delay	0.000…150.000s	0.005s	0.06s	Resetting time. The time allowed between pick-ups if the pick-up has not led to a trip operation. During this time the START signal is held on for the timers if the delayed pick-up release is active.
Delayed pick-up release	• No • Yes	-	Yes	Resetting characteristics selection either as time-delayed or as instant after the pick-up element is released. If activated the START signal is reset after the set release time delay.

© Arcteq Relays Ltd

Name	Range	Step	Default	Description
Time calc reset after release time	• No • Yes	-	Yes	Operating timer resetting characteristics selection. When active, the operating time counter is reset after a set release time if the pick-up element is not activated during this time. When disabled, the operating time counter is reset directly after the pick-up element is reset.
Continue time calculation during release time	• No • Yes	-	No	Time calculation characteristics selection. If activated, the operating time counter is continuing until a set release time has passed even if the pick-up element is reset.

Events and registers

The overvoltage function (abbreviated "OV" in event block names) generates events and registers from the status changes in the events listed below. The user can select which event messages are stored in the main event buffer: ON, OFF, or both. The events triggered by the function are recorded with a time stamp.

The function's outputs can be used for direct I/O controlling and user logic programming. The function also provides a resettable cumulative counter for the START, TRIP and BLOCKED events.

The function offers four (4) independent stages; the events are segregated for each stage operation.

Table. 4.5.14 - 251. Event messages.

Event block name	Event names
OV1...OV4	Start ON/OFF
OV1...OV4	Trip ON/OFF
OV1...OV4	Block ON/OFF

The function registers its operation into the last twelve (12) time-stamped registers; this information is available for all provided instances separately. The register of the function records the ON event process data for START, TRIP or BLOCKED. The table below presents the structure of the function's register content.

Table. 4.5.14 - 252. Register content.

Register	Description
Date and time	dd.mm.yyyy hh:mm:ss.mss
Event	Event name
Fault type	L1-G…L1-L2-L3
Pre-trigger voltage	Start/Trip -20ms voltage
Pre-fault voltage	Start -200ms voltage
Trip time remaining	0 ms...1800s

Register	Description
Used SG	Setting group 1...8 active

4.5.15 Undervoltage protection (U<; 27)

The undervoltage function is used for instant and time-delayed undervoltage protection. Devices with a voltage protection module has four (4) available stages of the function (U>, U>>, U>>>, U>>>>). The function constantly measures phase voltage magnitudes or line-to-line voltage magnitudes. Undervoltage protection has two blocking stages: internal blocking (based on voltage measurement and low voltage), or external blocking (e.g. during voltage transformer fuse failure).

Measured input

The function block uses fundamental frequency component of line-to-line or line-to-neutral (as the user selects). If the protection is based on line-to-line voltage, undervoltage protection is not affected by earth faults in isolated or compensated networks.

Table. 4.5.15 - 253. Measurement input of the U> function.

Signal	Description
U_{L12}RMS	Fundamental frequency component of U_{L12}/V voltage measurement
U_{L23}RMS	Fundamental frequency component of U_{L23}/V voltage measurement
U_{L31}RMS	Fundamental frequency component of U_{L31}/V voltage measurement
U_{L1}RMS	Fundamental frequency component of U_{L1}/V voltage measurement
U_{L2}RMS	Fundamental frequency component of U_{L2}/V voltage measurement
U_{L3}RMS	Fundamental frequency component of U_{L3}/V voltage measurement

Table. 4.5.15 - 254. Measured magnitude selection settings.

Name	Range	Default	Description
Measured magnitude	• P-P voltages • P-E voltages • U3 input (2LL-U3SS) • U4 input (SS)	P-P voltages	Selection of P-P or P-E voltages. Additionally, the U3 or U4 input can be assigned as the voltage channel to be supervised.

© Arcteq Relays Ltd

Figure. 4.5.15 - 107. Selectable measurement magnitudes with 3LN+U4 VT connection.

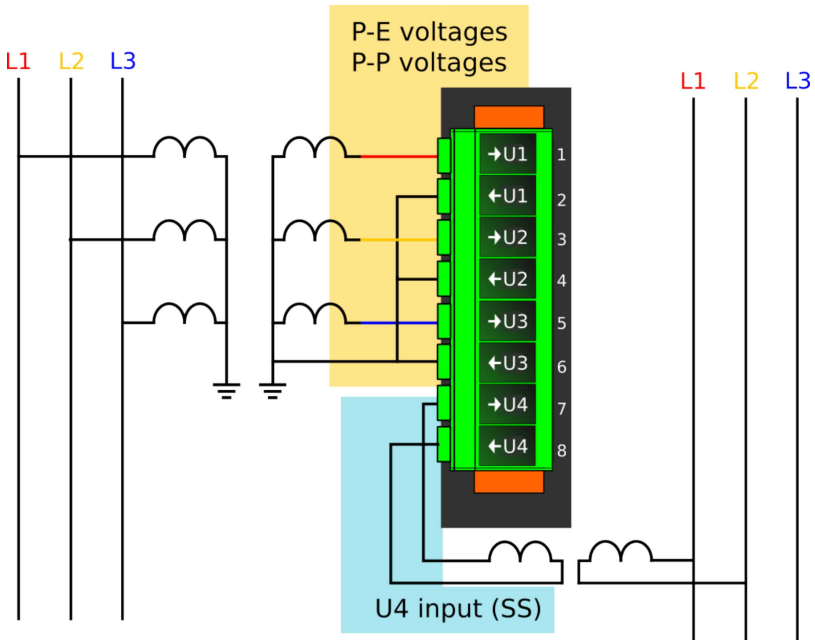

Figure. 4.5.15 - 108. Selectable measurement magnitudes with 3LL+U4 VT connection (P-E voltages not available without residual voltage).

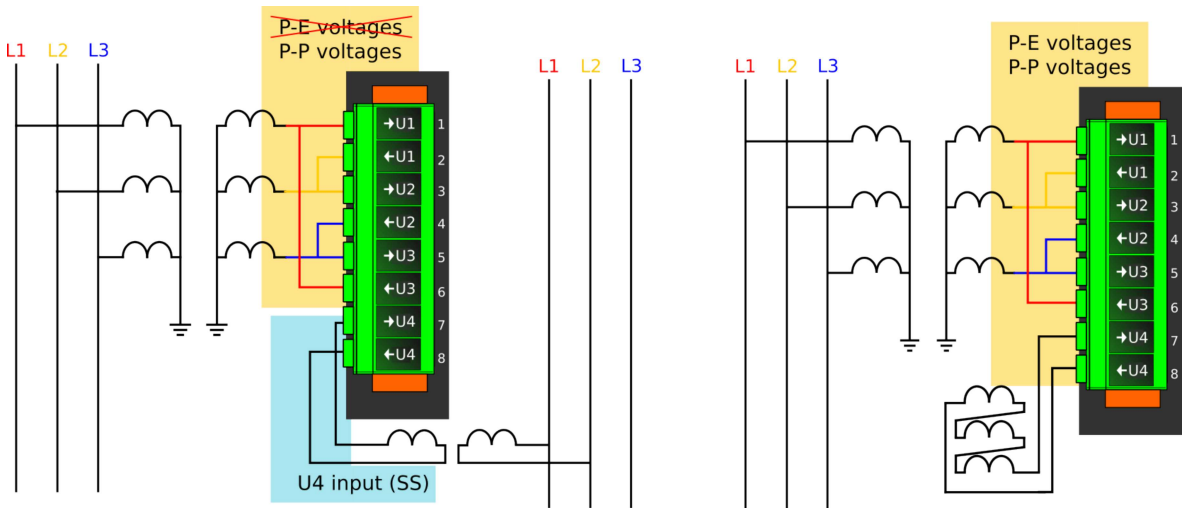

Figure. 4.5.15 - 109. Selectable measurement magnitudes with 2LL+U4 VT connection (P-E voltages not available without residual voltage).

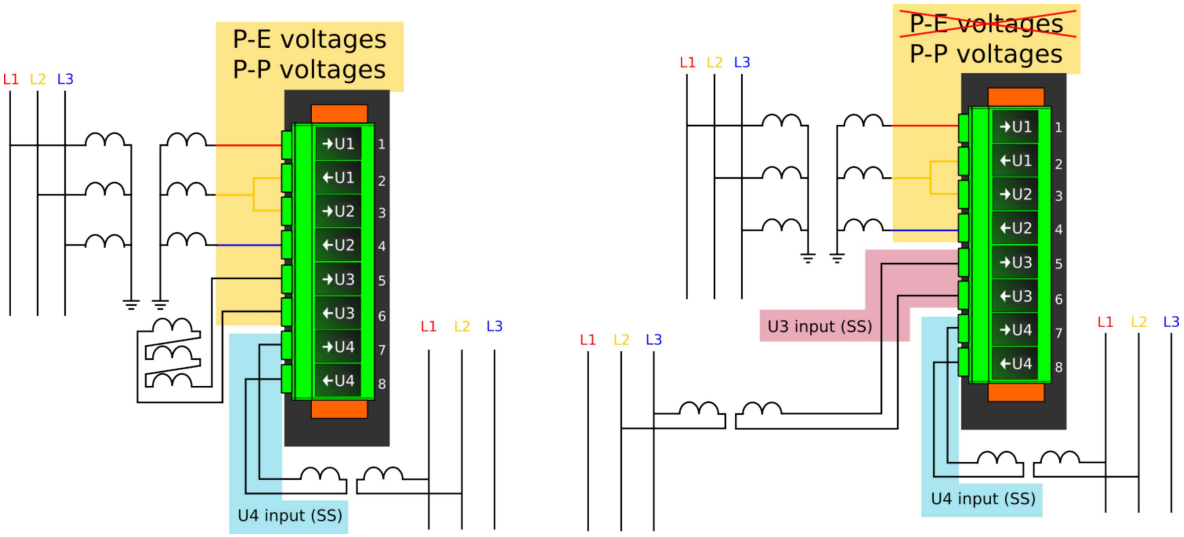

P-P Voltages and *P-E Voltages* selections follow phase-to-neutral or phase-to-phase voltages in the first three voltage channels (or two first voltage channels in the 2LL+U3+U4 mode). *U4 input* selection follows the voltage in Channel 4. *U3Input* selection only follows the voltage in Channel 3 if the 2LL+U3+U4 mode is in use.

General settings

The following general settings define the general behavior of the function. These settings are static i.e. it is not possible to change them by editing the setting group.

Table. 4.5.15 - 255. General settings of the function.

Name	Range	Default	Description
U< LN mode	• On • Blocked • Test • Test/ Blocked • Off	On	Set mode of UV block. This parameter is visible only when *Allow setting of individual LN mode* is enabled in *General* menu.
U< force status to	• Normal • Start • Trip • Blocked	Normal	Force the status of the function. Visible only when *Enable stage forcing* parameter is enabled in *General* menu.

Pick-up settings

The U_{set} setting parameter controls the pick-up of the U< function. This defines the minimum allowed measured voltage before action from the function. The function constantly calculates the ratio between the U_{set} and the measured magnitude (U_m) for each of the three voltages. The reset ratio of 103 % is built into the function and is always relative to the U_{set} value. The setting value is common for all measured amplitudes, and when the U_m exceeds the U_{set} value (in single, dual or all voltages) it triggers the pick-up operation of the function.

Setting group selection controls the operating characteristics of the function, i.e. the user or user-defined logic can change function parameters while the function is running.

© Arcteq Relays Ltd

Table. 4.5.15 - 256. Pick-up settings.

Name	Range	Step	Default	Description
U_{set}	0.00…120.00%U_n	0.01%U_n	60%U_n	Pick-up setting
U Block setting	0.00…100.00%U_n	0.01%U_n	10%U_n	Block setting. If set to zero, blocking is not in use. The operation is explained in the next chapter.

Using *Block setting* to prevent nuisance trips

It is recommended to use the *Block setting* parameter to prevent the device from tripping in a situation where the network is de-energized. When the measured voltage drops below the set value, the device does not give a tripping signal. If the measured voltage has dropped below the *Block setting* parameter, the blocking continues until all of the line voltages have increased above the U< pick-up setting. Please see the image below for a visualization of this function. If the block level is set to zero (0), blocking is not in use.

Figure. 4.5.15 - 110. Example of the block setting operation.

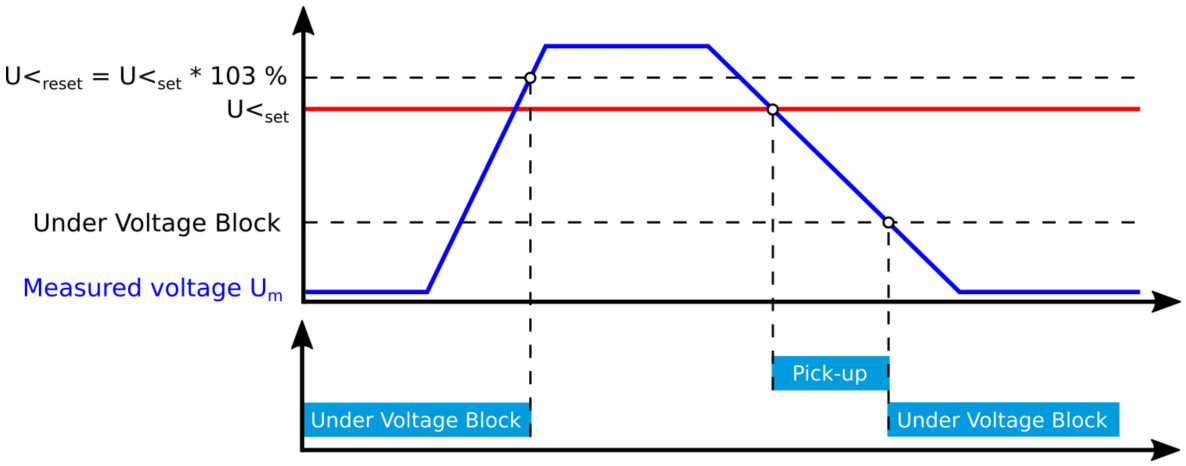

Read-only parameters

The function's *Info* page displays useful, real-time information on the state of the protection function. It is accessed either through the device's HMI display, or through the setting tool software when it is connected to the device and its Live Edit mode is active.

Table. 4.5.15 - 257. Information displayed by the function.

Name	Range	Step	Description
U< LN behaviour	• On • Blocked • Test • Test/Blocked • Off	-	Displays the mode of UV block. This parameter is visible only when *Allow setting of individual LN mode* is enabled in *General* menu.
U< pick-up setting	0.0...1 000 000.0V	0.1V	The primary voltage required for tripping. The displayed pick-up voltage level depends on the pick-up setting and the voltage transformer settings.

Name	Range	Step	Description
U< block setting	0.0...1 000 000.0V	0.1V	The primary voltage level required for trip blocking. If the measured voltage is below this value, the network is considered de-energized and the function will not trip. To deactivate the blocking the measured voltage must exceed the pick-up setting value.
Expected operating time	0.000...1800.000s	0.005s	Displays the expected operating time when a fault occurs. When IDMT mode is used, the expected operating time depends on the measured voltage value. If the measured voltage changes during a fault, the expected operating time changes accordingly.
Time remaining to trip	-1800.000...1800.000s	0.005s	When the function has detected a fault and counts down time towards a trip, this displays how much time is left before tripping occurs.
$U_{A(B)\,meas}/U_{set}$ at the moment	0.00...1250.00U_m/U_{set}	0.01U_m/U_{set}	The ratio between U_A or U_{AB} voltage and the pick-up value.
$U_{B(c)\,meas}/U_{set}$ at the moment	0.00...1250.00U_m/U_{set}	0.01U_m/U_{set}	The ratio between U_B or U_{BC} voltage and the pick-up value.
$U_{C(A)\,meas}/U_{set}$ at the moment	0.00...1250.00U_m/U_{set}	0.01U_m/U_{set}	The ratio between U_C or U_{CA} voltage and the pick-up value.
U_{meas}/U_{set} at the moment	0.00...1250.00U_m/U_{set}	0.01U_m/U_{set}	The ratio between the lowest measured phase or line voltage and the pick-up value.

Function blocking

The blocking signal is evaluated at the start of each program cycle. The blocking signals are connected to the function's dedicated input, which can be configured in the *IO → Blocking Input Control* tab of the function.

- When the pick-up element activates and the blocking signal is not active, a START signal is generated, and the function starts or continues with the trip time countdown.
- When the pick-up element activates and the blocking signal is active, a BLOCKED signal is generated, and the function does not process the event further.
- When a START signal is already active and the blocking input signal becomes active, the START signal is reset and BLOCKED signal is generated. The release time characteristics are then processed in the same way as when the pick-up signal is reset.

The blocking signal needs to reach the device minimum of 5 ms before the set operating delay has passed in order for the blocking to activate in time.

Operating time characteristics for trip and reset

The operating timers' behavior during a function can be set for TRIP signal and also for the release of the function in case the pick-up element is reset before the trip time has been reached. There are three basic operating modes available for the function:

© Arcteq Relays Ltd

- Instant operation: gives the TRIP signal with no additional time delay simultaneously with the START signal.
- Definite time operation (DT): gives the TRIP signal after a user-defined time delay regardless of the measured voltage as long as the voltage is above the U_{set} value and thus the pick-up element is active (independent time characteristics).
- Inverse definite minimum time (IDMT): gives the TRIP signal after a time which is in relation to the set pick-up voltage U_{set} and the measured voltage U_m (dependent time characteristics).

The IDMT function follows this formula:

$$t = \frac{k}{1 - \left(\frac{Um}{Us}\right)^a}$$

Where:

- t = operating time
- k = time dial setting
- U_m = measured voltage
- U_s = pick-up setting
- a = IDMT multiplier setting

The following table presents the setting parameters for the function's time characteristics.

Table. 4.5.15 - 258. Setting parameters for operating time characteristics.

Name	Range	Step	Default	Description
Delay type	• DT • IDMT	-	DT	Selection of the delay type time counter. The selection possibilities are dependent (IDMT, Inverse Definite Minimum Time) and independent (DT, Definite Time) characteristics.
Definite operating time delay	0.000…1800.000s	0.005s	0.040s	Definite time operating delay. This setting is active and visible when DT is the selected delay type. When set to 0.000 s, the stage operates as instant stage without added delay. When the parameter is set to 0.005...1800 s, the stage operates as independent delayed.
Time dial setting k	0.01…60.00s	0.01s	0.05s	This setting is active and visible when IDMT is the selected delay type. Time dial/multiplier setting for IDMT characteristics.
IDMT Multiplier	0.01…25.00s	0.01s	1.00s	This setting is active and visible when IDMT is the selected delay type. IDMT time multiplier in the U_m/U_{set} power.

Table. 4.5.15 - 259. Setting parameters for reset time characteristics.

Name	Range	Step	Default	Description
Release time delay	0.000…150.000s	0.005s	0.06s	Resetting time. The time allowed between pick-ups if the pick-up has not led to a trip operation. During this time the START signal is held on for the timers if the delayed pick-up release is active.

Name	Range	Step	Default	Description
Delayed pick-up release	• No • Yes	-	Yes	Resetting characteristics selection, either time-delayed or instant after the pick-up element is released. If activated, the START signal is reset after a set release time delay.
Time calc reset after release time	• No • Yes	-	Yes	Operating timer resetting characteristics selection. When actived, the operating time counter is reset after a set release time if the pick-up element is not activated during this time. When disabled, the operating time counter is reset directly after the pick-up element reset.
Continue time calculation during release time	• No • Yes	-	No	Time calculation characteristics selection. If activated, the operating time counter continues until a set release time even when the pick-up element is reset.

Events and registers

The undervoltage function (abbreviated "UV" in event block names) generates events and registers from the status changes in the events listed below. The user can select which event messages are stored in the main event buffer: ON, OFF, or both. The events triggered by the function are recorded with a time stamp.

The function's outputs can be used for direct I/O controlling and user logic programming. The function also provides a resettable cumulative counter for the START, TRIP and BLOCKED events.

The function offers four (4) independent stages; the events are segregated for each stage operation.

Table. 4.5.15 - 260. Event messages.

Event block name	Event names
UV1...UV4	Start ON/OFF
UV1...UV4	Trip ON/OFF
UV1...UV4	Block ON/OFF
UV1...UV4	Undervoltage Block ON/OFF

The function registers its operation into the last twelve (12) time-stamped registers; this information is available for all provided instances separately. The register of the function records the ON event process data for START, TRIP or BLOCKED. The table below presents the structure of the function's register content.

Table. 4.5.15 - 261. Register content.

Register	Description
Date and time	dd.mm.yyyy hh:mm:ss.mss
Event	Event name
Fault type	A…A-B-C

© Arcteq Relays Ltd

Register	Description
Pre-trigger voltage	Start/Trip -20ms voltage
Fault voltage	Start/Trip voltage
Pre-fault voltage	Start -200ms voltage
Trip time remaining	0 ms...1800s
Used SG	Setting group 1...8 active

4.5.16 Neutral overvoltage protection (U0>; 59N)

The neutral overvoltage function is used for non-directional instant and time-delayed earth fault protection.

Below is the formula for symmetric component calculation (and therefore to zero sequence voltage calculation).

$$U0 = 1/3(U_{L1} + U_{L2} + U_{L3})$$

$$U_{L1...3} = \text{Line to neutral voltages}$$

Below are some examples of zero sequence calculation.

Figure. 4.5.16 - 111. Normal situation.

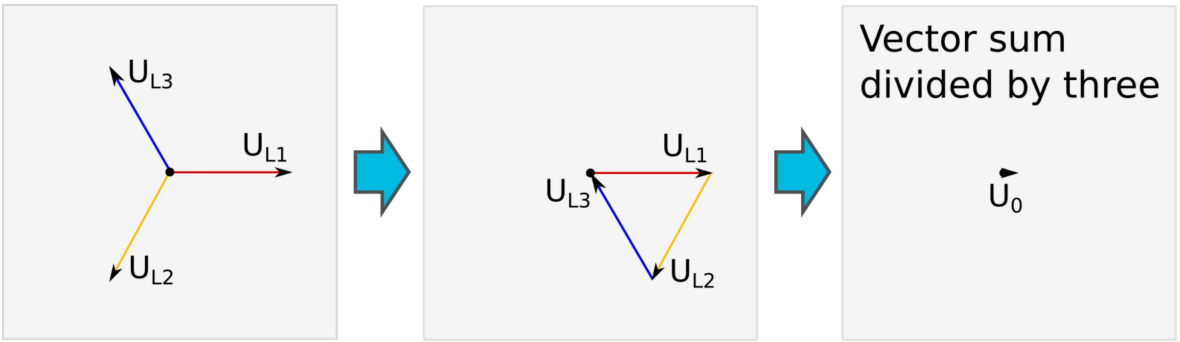

Figure. 4.5.16 - 112. Earth fault in isolated network.

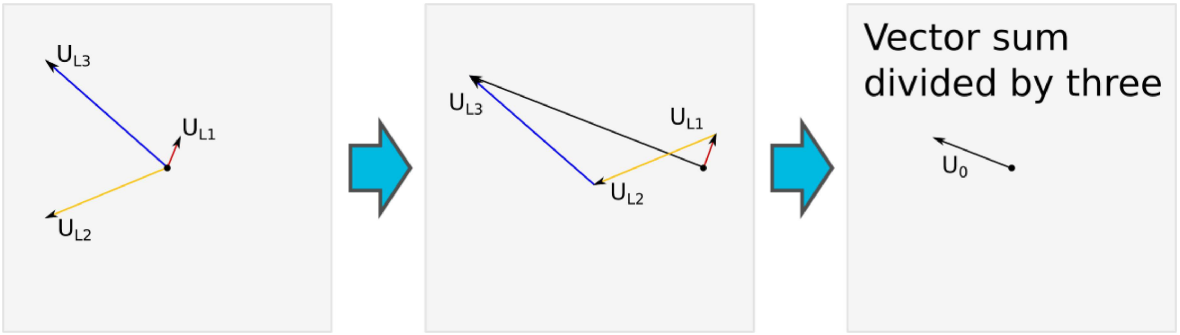

Figure. 4.5.16 - 113. Close-distance short-circuit between phases 1 and 3.

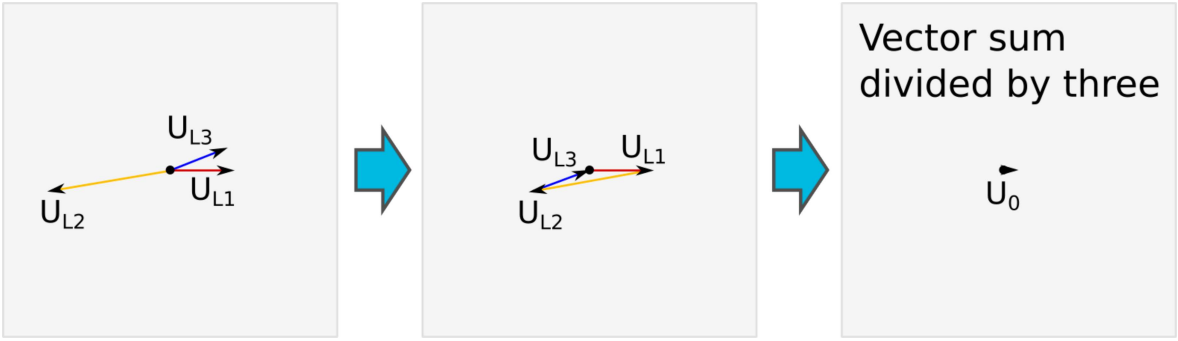

Measured input

The function block uses phase-to-neutral voltage magnitudes or calculated zero sequence component (as the user selects). Neutral overvoltage protection is scaled to line-to-line RMS level. When the line-to-line voltage of a system is 100 V in the secondary side, the earth fault is 100 % of the U_n and the calculated zero sequence voltage reaches 100/√3 V = 57.74 V.

The selection of the used measurement channel is made with a setting parameter.

Table. 4.5.16 - 262. Measurement inputs of the U0> function.

Signal	Description
U_0RMS	Fundamental frequency component of U0/V voltage measurement
U_{L1}RMS	Fundamental frequency component of U_{L1}/V voltage measurement
U_{L2}RMS	Fundamental frequency component of U_{L2}/V voltage measurement
U_{L3}RMS	Fundamental frequency component of U_{L3}/V voltage measurement

General settings

The following general settings define the general behavior of the function. These settings are static i.e. it is not possible to change them by editing the setting group.

Table. 4.5.16 - 263. General settings of the function.

Name	Range	Default	Description
U0> LN mode	• On • Blocked • Test • Test/ Blocked • Off	On	Set mode of NOV block. This parameter is visible only when *Allow setting of individual LN mode* is enabled in *General* menu.
U0> force status to	• Normal • Start • Trip • Blocked	Normal	Force the status of the function. Visible only when *Enable stage forcing* parameter is enabled in *General* menu.

© Arcteq Relays Ltd

Name	Range	Default	Description
U0> meas input select	• Select • U0Calc • U3 Input • U4 Input	Select	Defines which available measured magnitude is used by the function. U0Calc calculates the voltage from phase voltages. Please note that U3 Input and U4 Input selections are available only if the channel has been set to U0 mode at *Measurements → Transformers → VT module*.

Pick-up settings

The U_{set} setting parameter controls the pick-up of the U0> function. This defines the maximum allowed measured voltage before action from the function. The function constantly calculates the ratio between the U_{set} and the measured magnitude (U_m) for neutral voltage. The reset ratio of 97 % is built into the function and is always relative to the U_{set} value. The setting value is common for all measured amplitudes, and when the U_m exceeds the U_{set} value it triggers the pick-up operation of the function.

Setting group selection controls the operating characteristics of the function, i.e. the user or user-defined logic can change function parameters while the function is running.

Table. 4.5.16 - 264. Pick-up settings.

Name	Range	Step	Default	Description
Pick-up setting U0set>	1.00…99.00%U_n	0.01%U_n	20.00%U_n	Pick-up setting

Read-only parameters

The function's *Info* page displays useful, real-time information on the state of the protection function. It is accessed either through the device's HMI display, or through the setting tool software when it is connected to the device and its Live Edit mode is active.

Name	Range	Step	Description
U0> LN mode behaviour	• On • Blocked • Test • Test/Blocked • Off	-	Displays the mode of NOV block. This parameter is visible only when *Allow setting of individual LN mode* is enabled in *General* menu.
U0> Measuring now	• No U0 avail! • U0Calc • U3 Input • U4 Input	-	Displays which voltage channel is used by the function. If no voltage channel has been selected the function defaults to calculated residual voltage if line-to-neutral voltages have been connected to device. If no channel is set to "U0" mode and line-to-line voltages are connected, no residual voltage is available and "No U0 avail!" will be displayed.
U0> Pick-up setting	0.0...1 000 000.0V	0.1V	Primary voltage required for tripping. The displayed pick-up voltage level depends on the chosen U0 measurement input selection, on the pick-up settings and on the voltage transformer settings.
Expected operating time	0.000...1800.000s	0.005s	Displays the expected operating time when a fault occurs. When IDMT mode is used, the expected operating time depends on the measured voltage value. If the measured voltage changes during a fault, the expected operating time changes accordingly.

Name	Range	Step	Description
Time remaining to trip	-1800.000...1800.000s	0.005s	When the function has detected a fault and counts down time towards a trip, this displays how much time is left before tripping occurs.
U_{meas}/U_{set} at the moment	0.00...1250.00	0.01	The ratio between the measured or calculated neutral voltage and the pick-up value.

Function blocking

The blocking signal is evaluated at the start of each program cycle. The blocking signals are connected to the function's dedicated input, which can be configured in the *IO → Blocking Input Control* tab of the function.

- When the pick-up element activates and the blocking signal is not active, a START signal is generated, and the function starts or continues with the trip time countdown.
- When the pick-up element activates and the blocking signal is active, a BLOCKED signal is generated, and the function does not process the event further.
- When a START signal is already active and the blocking input signal becomes active, the START signal is reset and BLOCKED signal is generated. The release time characteristics are then processed in the same way as when the pick-up signal is reset.

The blocking signal needs to reach the device minimum of 5 ms before the set operating delay has passed in order for the blocking to activate in time.

Operating time characteristics for trip and reset

The operating timers' behavior during a function can be set for TRIP signal and also for the release of the function in case the pick-up element is reset before the trip time has been reached. There are three basic operating modes available for the function:

- Instant operation: gives the TRIP signal with no additional time delay simultaneously with the START signal.
- Definite time operation (DT): gives the TRIP signal after a user-defined time delay regardless of the measured or calculated voltage as long as the voltage is above the U_{set} value and thus the pick-up element is active (independent time characteristics).
- Inverse definite minimum time (IDMT): gives the TRIP signal after a time which is in relation to the set pick-up voltage U_{set} and the measured voltage U_m (dependent time characteristics).

The IDMT function follows this formula:

$$t = \frac{k}{\left(\frac{Um}{Us}\right)^{a} - 1}$$

Where:

- t = operating time
- k = time dial setting
- U_m = measured voltage
- U_s = pick-up setting
- a = IDMT multiplier setting

The following table presents the setting parameters for the function's time characteristics.

© Arcteq Relays Ltd

Table. 4.5.16 - 265. Setting parameters for operating time characteristics.

Name	Range	Step	Default	Description
Delay type	DT IDMT	-	DT	Selection of the delay type time counter. The selection possibilities are dependent (IDMT, Inverse Definite Minimum Time) and independent (DT, Definite Time) characteristics.
Definite operating time delay	0.000…1800.000s	0.005s	0.040s	Definite time operating delay. The setting is active and visible when DT is the selected delay type. When set to 0.000 s, the stage operates as instant without added delay. When the parameter is set to 0.005...1800 s, the stage operates as independent delayed.
Time dial setting k	0.01…60.00s	0.01s	0.05s	The setting is active and visible when IDMT is the selected delay type. Time dial/multiplier setting for IDMT characteristics.
IDMT Multiplier	0.01…25.00s	0.01s	1.00s	The setting is active and visible when IDMT is the selected delay type. IDMT time multiplier in the U_m/U_{set} power.

Table. 4.5.16 - 266. Setting parameters for reset time characteristics.

Name	Range	Step	Default	Description
Release time delay	0.000…150.000s	0.005s	0.06s	Resetting time. Time allowed between pick-ups if the pick-up has not led to a trip operation. During this time the START signal is held on for the timers if the delayed pick-up release is active.
Delayed pick-up release	• No • Yes	-	Yes	Resetting characteristics selection either as time-delayed or as instant after the pick-up element is released. If activated, the START signal is reset after a set release time delay.
Time calc reset after release time	• No • Yes	-	Yes	Operating timer resetting characteristics selection. When active, the operating time counter is reset after a set release time if the pick-up element is not activated during this time. When disabled, the operating time counter is reset directly after the pick-up element reset.
Continue time calculation during release time	• No • Yes	-	No	Time calculation characteristics selection. If activated, the operating time counter continues until a set release time has passed even if the pick-up element is reset.

The user can reset characteristics through the application. The default setting is a 60 ms delay; the time calculation is held during the release time.

In the release delay option the operating time counter calculates the operating time during the release. When using this option the function does not trip if the input signal is not re-activated while the release time count is on-going.

Events and registers

The neutral overvoltage function (abbreviated "NOV" in event block names) generates events and registers from the status changes in the events listed below. The user can select which event messages are stored in the main event buffer: ON, OFF, or both. The events triggered by the function are recorded with a time stamp.

The function's outputs can be used for direct I/O controlling and user logic programming. The function also provides a cumulative counter for the START, TRIP and BLOCKED events.

The function offers four (4) independent stages; the events are segregated for each stage operation.

Table. 4.5.16 - 267. Event messages.

Event block name	Event names
NOV1...NOV4	Start ON/OFF
NOV1...NOV4	Trip ON/OFF
NOV1...NOV4	Block ON/OFF

The function registers its operation into the last twelve (12) time-stamped registers; this information is available for all provided instances separately. The register of the function records the ON event process data for START, TRIP or BLOCKED. The table below presents the structure of the function's register content.

Table. 4.5.16 - 268. Register content.

Register	Description
Date and time	dd.mm.yyyy hh:mm:ss.mss
Event	Event name
Fault type	L1-G…L1-L2-L3
Pre-trigger voltage	Start/Trip -20ms voltage
Fault voltage	Start/Trip voltage
Pre-fault voltage	Start -200ms voltage
Trip time remaining	0 ms...1800s
Setting group in use	Setting group 1...8 active

4.5.17 Sequence voltage protection (U1/U2>/<; 47/27P/59PN)

The sequence voltage function is used for instant and time-delayed voltage protection. It has positive and negative sequence protection for both overvoltage and undervoltage (the user selects the needed function). The user can select the voltage used. Sequence voltage is based on the system's line-to-line voltage level. Protection stages can be set to protect against either undervoltage or overvoltage.

© Arcteq Relays Ltd

Positive sequence voltage calculation

Below is the formula for symmetric component calculation (and therefore to positive sequence voltage calculation).

$$U1 = {}^{1}/_{3}\,(U_{L1} + aU_{L2} + a^2U_{L3})$$

$$a = 1\angle 120°$$

$$a^2 = 1\angle 240°$$

$$U_{L1\ldots3} = Line\ to\ neutral\ voltages$$

In what follows are three examples of positive sequence calculation (positive sequence component vector).

Figure. 4.5.17 - 114. Normal situation.

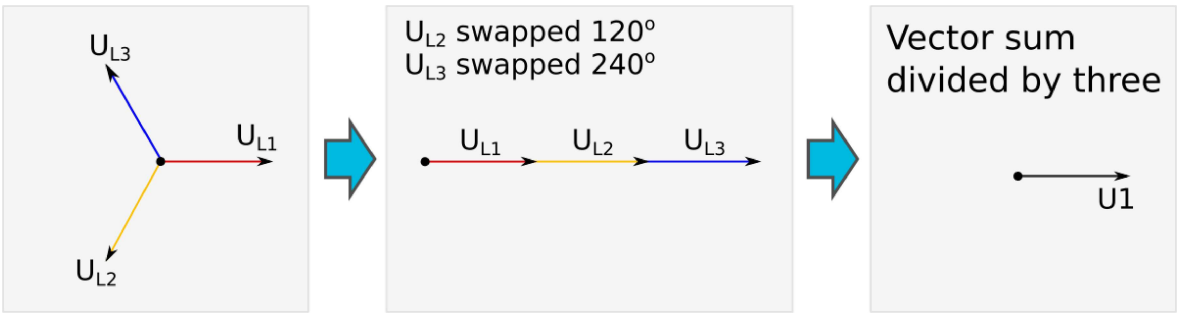

Figure. 4.5.17 - 115. Earth fault in an isolated network.

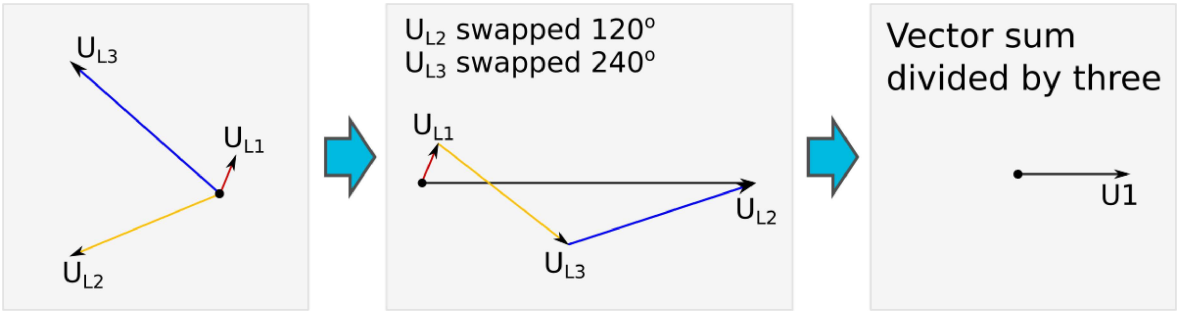

Figure. 4.5.17 - 116. Close-distance short-circuit between phases 1 and 3.

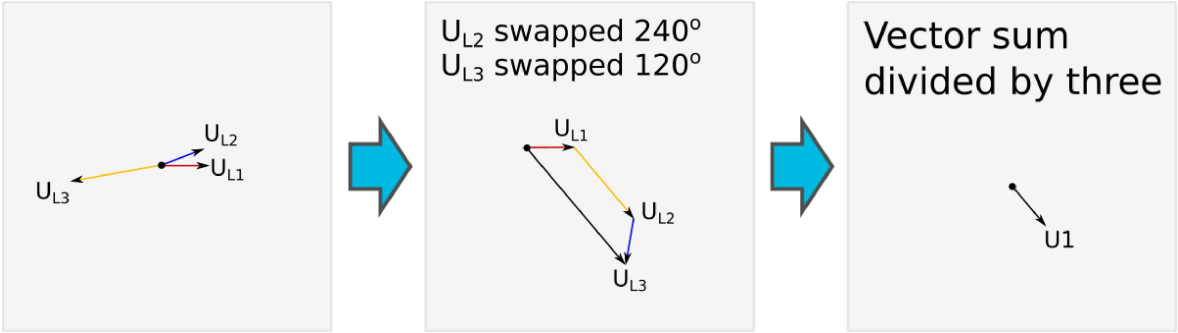

Negative sequence voltage calculation

Below is the formula for symmetric component calculation (and therefore to negative sequence voltage calculation).

$$U2 = {}^{1}/_{3}\,(U_{L1} + a^2 U_{L2} + a U_{L3})$$

$$a = 1\angle 120°$$

$$a^2 = 1\angle 240°$$

$$U_{L1\ldots3} = Line\ to\ neutral\ voltages$$

In what follows are three examples of negative sequence calculation (negative sequence component vector).

Figure. 4.5.17 - 117. Normal situation.

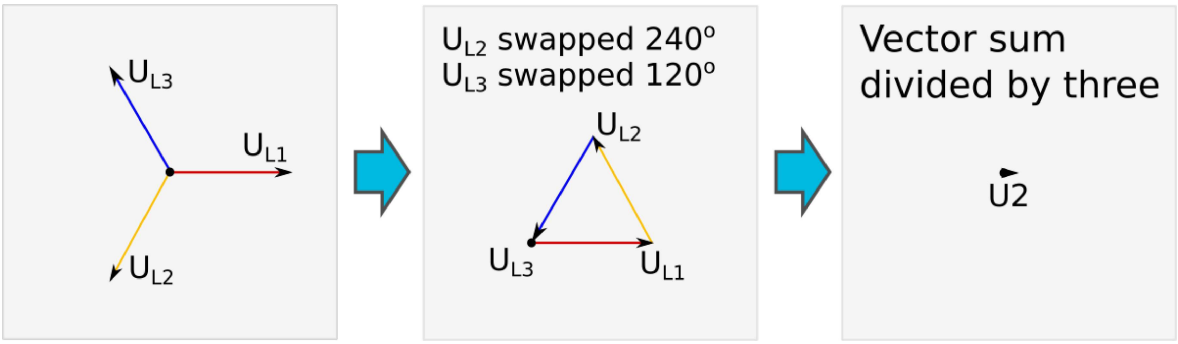

Figure. 4.5.17 - 118. Earth fault in isolated network.

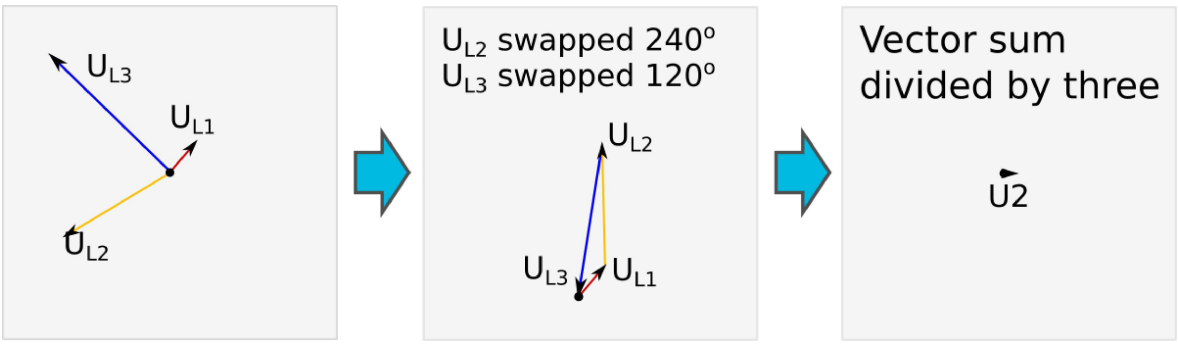

Figure. 4.5.17 - 119. Close-distance short-circuit between phases 1 and 3.

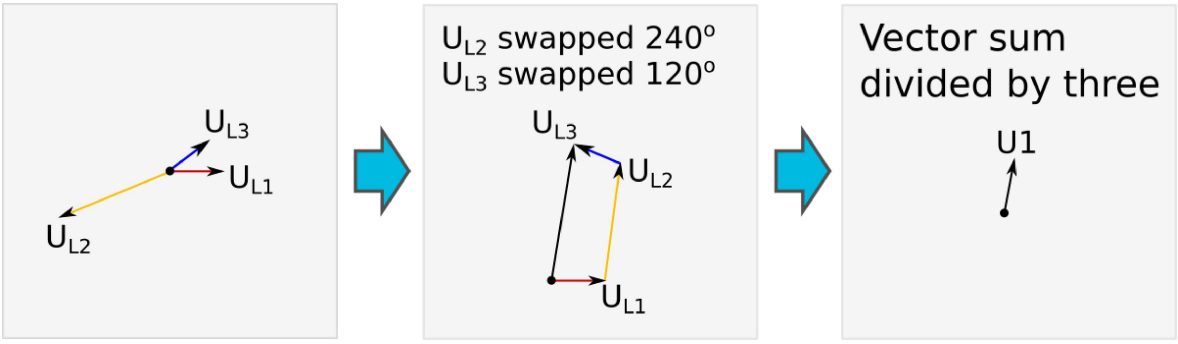

© Arcteq Relays Ltd

Measured input

The function block uses fundamental frequency component of phase-to-phase, phase-to-neutral and zero sequence voltage measurements. The user can select the monitored magnitude to be either positive sequence voltage or negative sequence voltage values.

Table. 4.5.17 - 269. Measurement inputs of the U1/U2>/< function.

Signal	Description
U_1RMS	Fundamental frequency component of U_1/V voltage channel
U_2RMS	Fundamental frequency component of U_2/V voltage channel
U_3RMS	Fundamental frequency component of U_3/V voltage channel
U_4RMS	Fundamental frequency component of U_4/V voltage channel

General settings

The following general settings define the general behavior of the function. These settings are static i.e. it is not possible to change them by editing the setting group.

Table. 4.5.17 - 270. General settings of the function.

Name	Range	Default	Description
U1/2 >/< LN mode	• On • Blocked • Test • Test/Blocked • Off	On	Set mode of VUB block. This parameter is visible only when *Allow setting of individual LN mode* is enabled in *General* menu.
U1/2 >/< force status to	• Normal • Start • Trip • Blocked	Normal	Force the status of the function. Visible only when *Enable stage forcing* parameter is enabled in *General* menu.
Measured magnitude	• U1 Positive sequence voltage • U2 Negative sequence voltage	U1 Positive sequence voltage	Selects which calculated voltage is supervised.

Pick-up settings

The U_{set} setting parameter controls the pick-up of the U1/U2>/< function. This defines the maximum or minimum allowed calculated U1 or U2 voltage before action from the function. The function constantly calculates the ratio between the U_{set} and the calculated U1 or U2 magnitude (U_C). The monitored voltage is chosen in the *Info* page with the parameter *Measured magnitude*. The reset ratio of 97 % in overvoltage applications is built into the function and is always relative to the U_{set} value. The reset ratio of 103 % in undervoltage applications is built into the function and is always relative to the U_{set} value. When the U_C goes above or below the U_{set} value it triggers the pick-up operation of the function.

Setting group selection controls the operating characteristics of the function, i.e. the user or user-defined logic can change function parameters while the function is running.

Table. 4.5.17 - 271. Pick-up settings.

Name	Range	Step	Default	Description
Pick-up terms	• Over > • Under<	-	Over>	Selects whether the function picks-up when the monitored voltage is under or over the set pick-up value.
U_{set}	5.00…150.00%U_n	0.01%U_n	105%U_n	Pick-up setting
U_{blk}	0.00…80.00%U_n	0.01%U_n	5%U_n	Undervoltage blocking (visible when the pick-up term is Under<)

Using *Block setting* to prevent nuisance trips

It is recommended to use the *Under block setting* U_{blk} parameter when Under< is the chosen tripping condition to prevent the function from tripping in a situation where the network is de-energized. When the measured voltage drops below the set value, the function does not give a tripping signal. If the measured voltage has dropped below the *Under block setting* U_{blk} parameter, the blocking continues until all of the line voltages have increased above the U< pick-up setting. Please see the image below for a visualization of this function. If the block level is set to zero (0), blocking is not in use.

Figure. 4.5.17 - 120. Example of the block setting operation.

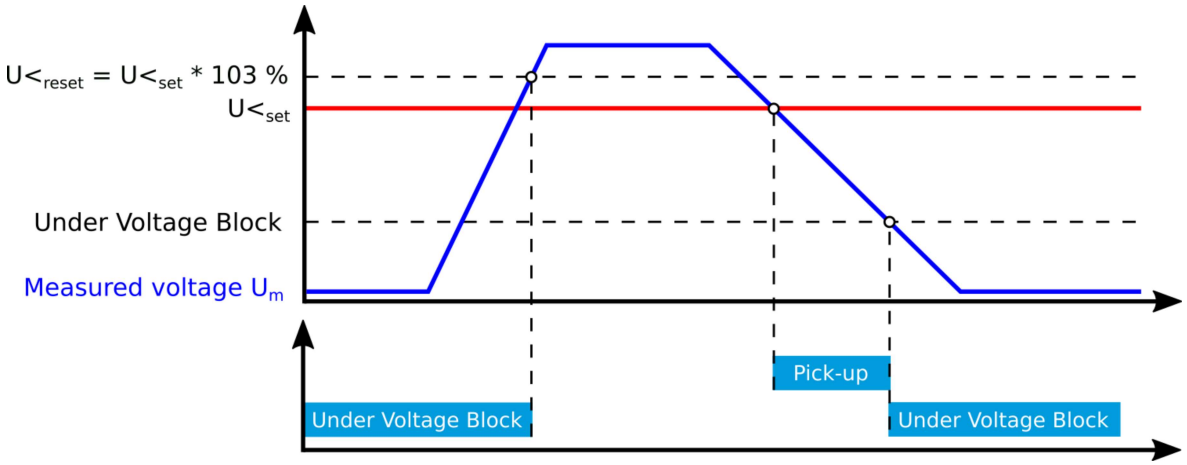

Read-only parameters

The function's *Info* page displays useful, real-time information on the state of the protection function. It is accessed either through the device's HMI display, or through the setting tool software when it is connected to the device and its Live Edit mode is active.

Table. 4.5.17 - 272. Information displayed by the function.

Name	Range	Step	Description
U1/2 >/< LN behaviour	• On • Blocked • Test • Test/Blocked • Off	-	Displays the mode of VUB block. This parameter is visible only when *Allow setting of individual LN mode* is enabled in *General* menu.

© Arcteq Relays Ltd
IM00099

Name	Range	Step	Description
U1/2 >/< Pick-up setting	0.0...1 000 000.0V	0.1V	The primary voltage required for tripping. The displayed pick-up voltage level depends on the pick-up setting and the voltage transformer settings.
Expected operating time	0.000...1800.000s	0.005s	Displays the expected operating time when a fault occurs. When IDMT mode is used, the expected operating time depends on the measured voltage value. If the measured voltage changes during a fault, the expected operating time changes accordingly.
Time remaining to trip	-1800.000...1800.000s	0.005s	When the function has detected a fault and counts down time towards a trip, this displays how much time is left before tripping occurs.
U_{meas}/U_{set} at the moment	0.00...1250.00U_m/U_{set}	0.01U_m/U_{set}	The ratio between the measured voltage and the pick-up value.

Function blocking

The blocking signal is evaluated at the start of each program cycle. The blocking signals are connected to the function's dedicated input, which can be configured in the *IO → Blocking Input Control* tab of the function.

- When the pick-up element activates and the blocking signal is not active, a START signal is generated, and the function starts or continues with the trip time countdown.
- When the pick-up element activates and the blocking signal is active, a BLOCKED signal is generated, and the function does not process the event further.
- When a START signal is already active and the blocking input signal becomes active, the START signal is reset and BLOCKED signal is generated. The release time characteristics are then processed in the same way as when the pick-up signal is reset.

The blocking signal needs to reach the device minimum of 5 ms before the set operating delay has passed in order for the blocking to activate in time.

Operating time characteristics for trip and reset

The operating timers' behavior during a function can be set for TRIP signal and also for the release of the function in case the pick-up element is reset before the trip time has been reached. There are three basic operating modes available for the function:

- Instant operation: gives the TRIP signal with no additional time delay simultaneously with the START signal.
- Definite time operation (DT): gives the TRIP signal after a user-defined time delay regardless of the measured or calculated voltage as long as the voltage is above the U_{set} value and thus the pick-up element is active (independent time characteristics).
- Inverse definite minimum time (IDMT): gives the TRIP signal after a time which is in relation to the set pick-up voltage U_{set} and the measured voltage U_m (dependent time characteristics).

The IDMT function follows one of the following formulas:

Overvoltage

$$t = \frac{k}{\left(\frac{Um}{Us}\right)^a - 1}$$

Undervoltage

$$t = \frac{k}{1 - \left(\frac{Um}{Us}\right)^a}$$

Where:

- t = operating time
- k = time dial setting
- U_m = measured voltage
- U_s = pick-up setting
- a = IDMT multiplier setting

The following table presents the setting parameters for the function's time characteristics.

Table. 4.5.17 - 273. Setting parameters for operating time characteristics.

Name	Range	Step	Default	Description
Delay type	• DT • IDMT	-	DT	Selection of the delay type time counter. The selection possibilities are dependent (IDMT, Inverse Definite Minimum Time) and independent (DT, Definite Time) characteristics.
Definite operating time delay	0.000…1800.000s	0.005s	0.040s	Definite time operating delay. The setting is active and visible when DT is the selected delay type. When set to 0.000 s, the stage operates as instant without added delay. When the parameter is set to 0.005...1800 s, the stage operates as independent delayed.
Time dial setting k	0.01…60.00s	0.01s	0.05s	The setting is active and visible when IDMT is the selected delay type. Time dial/multiplier setting for IDMT characteristics.
IDMT Multiplier	0.01…25.00s	0.01s	1.00s	The setting is active and visible when IDMT is the selected delay type. IDMT time multiplier in the U_m/U_{set} power.

Table. 4.5.17 - 274. Setting parameters for reset time characteristics.

Name	Range	Step	Default	Description
Release time delay	0.000…150.000s	0.005s	0.06s	Resetting time. Time allowed between pick-ups if the pick-up has not led to a trip operation. During this time the START signal is held on for the timers if the delayed pick-up release is active.
Delayed pick-up release	• No • Yes	-	Yes	Resetting characteristics selection either as time-delayed or as instant after the pick-up element is released. If activated, the START signal is reset after a set release time delay.
Time calc reset after release time	• No • Yes	-	Yes	Operating timer resetting characteristics selection. When active, the operating time counter is reset after a set release time if the pick-up element is not activated during this time. When disabled, the operating time counter is reset directly after the pick-up element reset.
Continue time calculation during release time	• No • Yes	-	No	Time calculation characteristics selection. If activated, the operating time counter continues until a set release time has passed even if the pick-up element is reset.

© Arcteq Relays Ltd

The user can reset characteristics through the application. The default setting is a 60 ms delay; the time calculation is held during the release time.

In the release delay option the operating time counter calculates the operating time during the release. When using this option the function does not trip if the input signal is not re-activated while the release time count is on-going.

Events and registers

The sequence voltage function (abbreviated "VUB" in event block names) generates events and registers from the status changes in the events listed below. The user can select which event messages are stored in the main event buffer: ON, OFF, or both. The events triggered by the function are recorded with a time stamp.

The function's outputs can be used for direct I/O controlling and user logic programming. The function also a resettable cumulative counter for the START, TRIP and BLOCKED events.

The function offers four (4) independent stages; the events are segregated for each stage operation.

Table. 4.5.17 - 275. Event messages.

Event block name	Event names
VUB1...VUB4	Start ON/OFF
VUB1...VUB4	Trip ON/OFF
VUB1...VUB4	Block ON/OFF

The function registers its operation into the last twelve (12) time-stamped registers; this information is available for all provided instances separately. The register of the function records the ON event process data for START, TRIP or BLOCKED. The table below presents the structure of the function's register content.

Table. 4.5.17 - 276. Register content.

Register	Description
Date and time	dd.mm.yyyy hh:mm:ss.mss
Event	Event name
Pre-trigger voltage	Start/Trip -20ms voltage
Fault voltage	Start/Trip voltage
Pre-fault voltage	Start -200ms voltage
Trip time remaining	0 ms...1800s
Setting group in use	Setting group 1...8 active

4.5.18 Low-voltage ride-through (27T)

Low-voltage ride-through (LVRT), is the capability of electric smaller generators to stay connected in short periods of voltage sags due to faults or similar phenomena's in network. It is mostly needed at distribution level (wind parks, PV systems, distributed cogeneration, etc.) to prevent a short circuit at HV or EHV level from causing a widespread loss of power generation. Similar requirements for critical loads such as computer systems and industrial processes are often handled with an uninterruptible power supply (UPS) or capacitor bank to supply make-up power during these events.

Concept

Many generator designs use electric current flowing through windings to produce the magnetic field on which the motor or generator operates. This is in contrast to designs that use permanent magnets to generate this field instead. Such devices may have a minimum working voltage, below which the device does not work correctly, or does so at greatly reduced efficiency. Some will disconnect themselves from the circuit when these conditions apply. The effect is more pronounced in doubly fed induction generators, which have two sets of powered magnetic windings, than in squirrel-cage induction generators, which have only one. Synchronous generators may slip and become unstable, if the voltage of the stator winding goes below a certain threshold.

Avoid larger blackouts

In a grid containing many distributed generators subject to disconnection at under voltage, it is possible to cause a chain reaction that takes other generators offline in the process. This can occur in the event of a voltage dip that causes one of the generators to disconnect from the grid. As voltage dips are often caused by too little generation for the load in a distribution grid, removing generation can cause the voltage to drop further. This may bring the voltage down enough to cause another generator to trip, lower the voltage even further, and may cause a cascading failure.

Figure. 4.5.18 - 121. Operating principle of the low-voltage ride-through protection function.

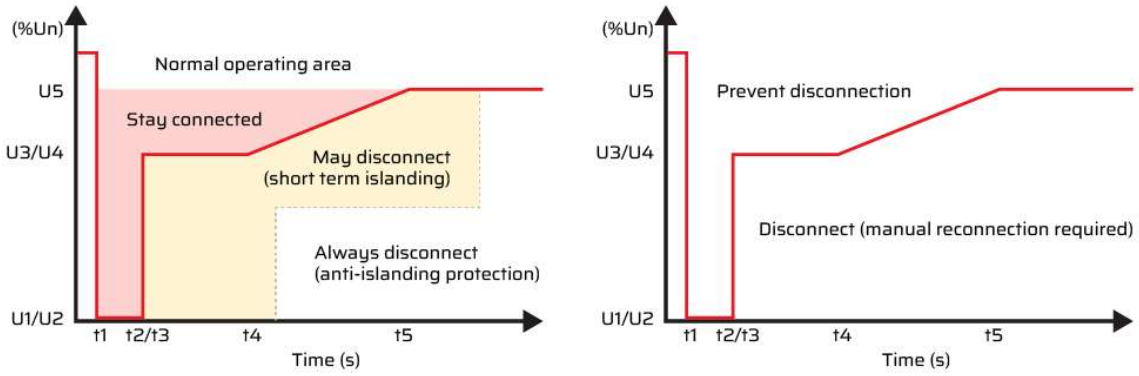

Ride-through systems

Modern wind turbines, typically 1 MW and larger, are normally required to include systems that allow them to operate through such an event, and thereby "ride through" the voltage dip. Similar requirements are now becoming common on large solar power installations that likewise might cause instability in the event of a widespread disconnection of generating units. Depending on the application the device may, during and after the dip, be required to:

- Disconnect and stay disconnected until manually ordered to reconnect.
- Disconnect temporarily from the grid, but reconnect and continue operation after the dip.
- Stay operational and not disconnect from the grid.
- Stay connected and support the grid with reactive power.

© Arcteq Relays Ltd

Measured input

The function block uses the fundamental frequency component of line-to-line or line-to-neutral (as the user selects). LVRT protection uses U_{L12} and U_{L23} line-to-line voltages to measure the network voltage level. In line-to-earth voltage measurement mode all three voltages U_{L1}, U_{L2} and U_{L3} have to be connected. In line-to-line voltage measurement connection, at least the voltages U_{L12} and U_{L23} must be connected to the device.

Figure. 4.5.18 - 122. RMS average of measured line-to-line voltages used for protection.

$$\frac{U_{L12} + U_{L23}}{2}$$

Table. 4.5.18 - 277. Measurement inputs of the LVRT function.

Signal	Description
U_{L12}RMS	Fundamental frequency component of U_{L12}/V voltage measurement
U_{L23}RMS	Fundamental frequency component of U_{L23}/V voltage measurement
U_{L31}RMS	Fundamental frequency component of U_{L31}/V voltage measurement
U_{L1}RMS	Fundamental frequency component of U_{L1}/V voltage measurement
U_{L2}RMS	Fundamental frequency component of U_{L2}/V voltage measurement
U_{L3}RMS	Fundamental frequency component of U_{L3}/V voltage measurement

General settings

The following general settings define the general behavior of the function. These settings are static i.e. it is not possible to change them by editing the setting group.

Table. 4.5.18 - 278. General settings of the function.

Name	Range	Default	Description
LVRT LN mode	• On • Blocked • Test • Test/ Blocked • Off	• On	Set mode of LVRT block. This parameter is visible only when *Allow setting of individual LN mode* is enabled in *General* menu.
LVRT force status to	• Normal • Start • Trip • Blocked • Undervolt Blk On	• Normal	Force the status of the function. Visible only when *Enable stage forcing* parameter is enabled in *General* menu.

Read-only parameters

The function's *Info* page displays useful, real-time information on the state of the protection function. It is accessed either through the device's HMI display, or through the setting tool software when it is connected to the device and its Live Edit mode is active.

Table. 4.5.18 - 279. Information displayed by the function.

Name	Range	Step	Description
LVRT LN behaviour	• On • Blocked • Test • Test/Blocked • Off	-	Displays the mode of LVRT block. This parameter is visible only when *Allow setting of individual LN mode* is enabled in *General* menu.
LVRT condition	• Normal • Start • Trip • Blocked • Undervolt Blk On	-	Displays status of the protection function.
Measured voltage (U12+U23 avg)	0.00…1250.00 %Un	0.01 %Un	Measured line-to-line voltage average.
Umeas / Fault release>	0.00…1250.00 Um/Uset	0.01 Um/ Uset	Measured voltage compared to hysteresis setting.
Umeas / Fault start <	0.00…1250.00 Um/Uset	0.01 Um/ Uset	Measured voltage compared to pickup setting.
Fault on timer	0.000...1800.000s	0.005s	How long timer has been running since voltage dropped below pickup limit.

Pick-up settings

Setting group selection controls the operating characteristics of the function, i.e. the user or user-defined logic can change function parameters while the function is running. Stage-related settings are described below.

© Arcteq Relays Ltd

Figure. 4.5.18 - 123. LVRT characteristic with three setting plots.

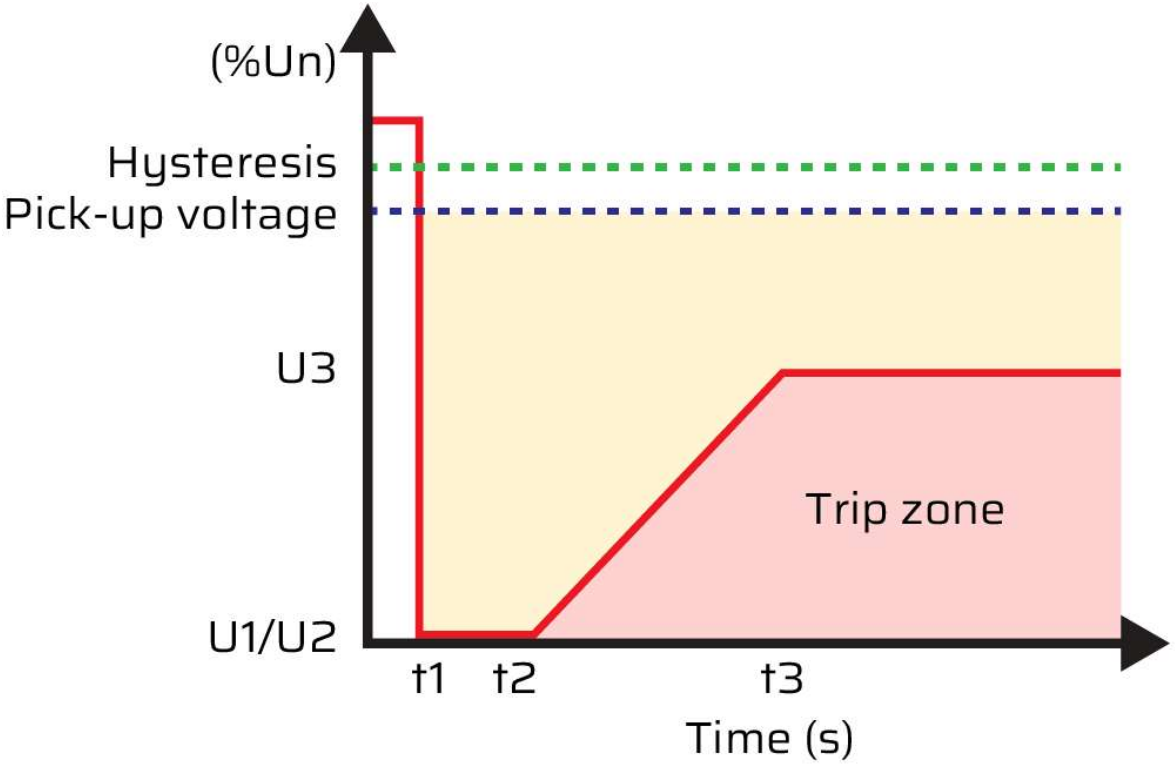

Table. 4.5.18 - 280. Pick-up settings.

Name	Range	Step	Default	Description
Fault start<	50.00…120.00 %Un	0.01 %Un	87 %Un	LVRT characteristic pickup voltage level activates fault timer.
Fault reset	50.00…120.00 %Un	0.01 %Un	93 %Un	Timer resets once network voltage increases above hysteresis setting. Fault reset> must be set higher than fault< setting.
Low voltage block limit	0.00…80.00 %Un	0.01 %Un	10.00 %Un	Voltage descending below low voltage block limit sets the LVRT to blocked state. In case voltage block is not wanted, set the value to 0%.
Numer of knee points	2...10	1	3	Determine how many knee points the LVRT characteristic has. Each knee point has individual voltage and time settings.
Amplitude plot [1...10]	0.00…120.00 %Un	0.01 %Un	0.00 %Un	Amplitude setting for trip zone at the first knee point. Measured voltage has to fall below this limit to trip LVRT stage.
Time plot [1...10]	0.100…1800.000 s	0.005 s	-	First knee point time setting is set to 0 seconds as a fixed value.
Time plot [2...10]	0.100…1800.000 s	0.005 s	-	Continue building LVRT characteristic with another plot and settings.

LVRT operating principle

From the grid operator's point of view, an LVRT profile defines a voltage profile that a distributed energy resource being connected to the grid should be able to ride through, in case of a low voltage event (voltage dip). The distributed energy resource is only allowed to disconnect from the grid if the voltage at the point of common coupling drops below the LVRT borderline. In other words, a LVRT protection function is a time-dependent voltage supervision according to a predefined voltage profile. The time-dependent voltage supervision is started as soon as the voltage at the point of common coupling falls below the Umeas/Fault start< voltage level. Voltage drop/sag is considered to be over once voltage in returns back to normal level, which in this case is considered higher than Umeas/Fault release> setting.

The LVRT module is designed for distributed generation resources that operate in parallel with the grid. It supervises system voltage disturbances by comparing them with a configurable voltage profile that is triggered once the system voltage falls below a configurable start value Umeas/Fault start<.

Once triggered, the LVRT module supervises the system voltage consecutively and determines if the voltage excursion is above or below of the preset voltage profile. A trip signal is only issued if the voltage excursion exits the "Ride-through" region and goes into the "Tripping" region.

Function blocking

The blocking signal is evaluated at the start of each program cycle. The blocking signals are connected to the function's dedicated input, which can be configured in the *IO → Blocking Input Control* tab of the function.

- When the pick-up element activates and the blocking signal is not active, a START signal is generated, and the function starts or continues with the trip time countdown.
- When the pick-up element activates and the blocking signal is active, a BLOCKED signal is generated, and the function does not process the event further.
- When a START signal is already active and the blocking input signal becomes active, the START signal is reset and BLOCKED signal is generated. The release time characteristics are then processed in the same way as when the pick-up signal is reset.

The blocking signal needs to reach the device minimum of 5 ms before the set operating delay has passed in order for the blocking to activate in time.

Events and registers

The low-voltage ride-through function (abbreviated "LVRT" in event block names) generates events and registers from the status changes in the events listed below. The user can select which event messages are stored in the main event buffer: ON, OFF, or both. The events triggered by the function are recorded with a time stamp.

The function's output can be used for direct I/O controlling and user logic programming. The function also provides a resettable cumulative counter for the START, TRIP and BLOCKED events.

Table. 4.5.18 - 281. Event messages.

Event block name	Event names
LVRT1	Vstart< ON/OFF
LVRT1	Vtrip ON/OFF
LVRT1	LVRT Block ON/OFF
LVRT1	LVRT UV Block ON/OFF

© Arcteq Relays Ltd

The function registers its operation into the last twelve (12) time-stamped registers; this information is available for all provided instances separately. The register of the function records the ON event process data for START, TRIP or BLOCKED. The table below presents the structure of the function's register content.

Table. 4.5.18 - 282. Register content.

Name	Description
Date and time	dd.mm.yyyy hh:mm:ss.mss
Event	Event name
Fault type	• A(AB) • B(BC) • A-B(AB-BC) • C(CA) • A-C(AB-CA) • B-C(BC-CA) • A-B-C
Voltage ABC Pre-trig	Start/Trip -20ms voltage
Trip time remaining	0 ms...1800s
Setting group in use	Setting group 1...8 active.
Voltage ABC prefault	Start -200ms voltage

4.5.19 Overfrequency and underfrequency protection (f>/<; 81O/81U)

The frequency protection function can be used both in overfrequency and in underfrequency situations, and it has four (4) stages for both. Frequency protection can be applied to protect feeder, bus, transformer, motor and generator applications. The difference between the generated power and the load demand can cause the frequency to drop below or rise above the allowed level. When the consumption is larger than the generated power, the frequency may drop. When more power is generated than is consumed, overfrequency can occur.

In generator applications too big a load or a malfunction in the power controller can cause the frequency to decrease. Underfrequency causes damage to turbine wings through vibration as well as heating due to increased iron losses, dropped cooling efficieny and over-magnetization in step-up transformers. Overfrequency protection prevents the generator from running too fast which can cause damage to the generator turbine.

Underfrequency and overfrequency protection can be used as an indicator of an accidental island operation in distributed generation and in some consumers (as it is unlikely that the consumed and generated power are the same). Overfrequency is also often used to control power generation to keep the system's frequency consistent.

Each stage can be activated and deactivated individually. After the f>/< mode has been activated (*Protection → Stage activation → Frequency stages*), the user can activate and deactivate the individual stages at will (*Protection → Frequency → Frequency protection f >/< → INFO → Stage operational setup*).

Measured input

The frequency protection function compares the measured frequency to the pick-up setting (given in Hz). There are three (3) frequency references available. Please refer to "Frequency tracking and scaling" chapter for a detailed description of frequency tracking.

Table. 4.5.19 - 283. Measurement inputs of the f>/< function.

Signals	Description
Frequency reference 1	Primary frequency reference
Frequency reference 2	Secondary frequency reference
Frequency reference 3	Tertiary frequency reference

General settings

The following general settings define the general behavior of the function. These settings are static i.e. it is not possible to change them by editing the setting group.

Table. 4.5.19 - 284. General settings of the function.

Name	Range	Default	Description
f</> LN mode	• On • Blocked • Test • Test/ Blocked • Off	On	Set mode of FRQV block. This parameter is visible only when *Allow setting of individual LN mode* is enabled in *General* menu.
f> enable f>> enable f>>> enable f>>>> enable f< enable f<< enable f<<< enable f<<<< enable	• No • Yes	No	Enables or disables the stage.
f> force status to f>> force status to f>>> force status to f>>>> force status to f< force status to f<< force status to f<<< force status to f<<<< force status to	• Normal • Start • Trip • Blocked	Normal	Force the status of the function. Visible only when *Enable stage forcing* parameter is enabled in *General* menu.

© Arcteq Relays Ltd

Pick-up settings

The f_{set}>, f_{set}>>, etc.setting parameters control the pick-up of each stage of the f>/< function. They define the maximum or minimum allowed measured frequency before action from the function. The function constantly calculates the ratio between the pick-up setting and the measured frequency. The reset ratio of 20mHz is built into the function and is always relative to the pick-up value.

Setting group selection controls the operating characteristics of the function, i.e. the user or user-defined logic can change function parameters while the function is running.

Table. 4.5.19 - 285. Pick-up settings.

Name	Range	Step	Default	Description
f> used in setting group	• No • Yes	-	No	Enables or disables the protection stage in the setting group.
fset>	10.00…80.00Hz	0.01Hz	51Hz	Pick-up setting
fset<	5.00…75.00Hz	0.01Hz	49Hz	Pick-up setting
f< undervoltage block	0.00...120.00%Un	0.01%Un	0.00%Un	Block setting. If set to zero, blocking is not in use. When the measured voltage drops below the set value, the operation of the functions is blocked.

Operating time characteristics for trip and reset

This function supports definite time delay (DT). For detailed information on these delay types please refer to the chapter "General properties of a protection function" and its section "Operating time characteristics".

Read-only parameters

The function's *Info* page displays useful, real-time information on the state of the protection function. It is accessed either through the device's HMI display, or through the setting tool software when it is connected to the device and its Live Edit mode is active.

Table. 4.5.19 - 286. Information displayed by the function.

Name	Range	Step	Description
f</> LN behaviour	• On • Blocked • Test • Test/Blocked • Off	-	Displays the mode of FRQV block. This parameter is visible only when *Allow setting of individual LN mode* is enabled in *General* menu.
f</> condition	• Normal • Start • Trip • Blocked	-	Displays the status of the protection function.
f meas / f set	0.000..20.000f_m/f_{set}	0.001f_m/f_{set}	The ratio between the measured frequency and the pick-up value.

Name	Range	Step	Description
Expected operating time	0.000...1800.000s	0.005s	Displays the expected operating time when a fault occurs.
Time remaining to trip	-1800.000...1800.000s	0.005s	When the function has detected a fault and counts down time towards a trip, this displays how much time is left before tripping occurs.

Function blocking

The blocking signal is evaluated at the start of each program cycle. The blocking signals are connected to the function's dedicated input, which can be configured in the *IO → Blocking Input Control* tab of the function.

- When the pick-up element activates and the blocking signal is not active, a START signal is generated, and the function starts or continues with the trip time countdown.
- When the pick-up element activates and the blocking signal is active, a BLOCKED signal is generated, and the function does not process the event further.
- When a START signal is already active and the blocking input signal becomes active, the START signal is reset and BLOCKED signal is generated. The release time characteristics are then processed in the same way as when the pick-up signal is reset.

The blocking signal needs to reach the device minimum of 5 ms before the set operating delay has passed in order for the blocking to activate in time.

Events and registers

The frequency function (abbreviated "FRQV" in event block names) generates events and registers from the status changes in the events listed below. The user can select which event messages are stored in the main event buffer: ON, OFF, or both. The events triggered by the function are recorded with a time stamp.

The function's outputs can be used for direct I/O controlling and user logic programming. The function also provides a resettable cumulative counter for the START, TRIP and BLOCKED events.

Table. 4.5.19 - 287. Event messages.

Event block name	Event names
FRQV1	f>/< Start ON/OFF
FRQV1	f>/< Trip ON/OFF
FRQV1	f>/< Blocked ON/OFF

The function registers its operation into the last twelve (12) time-stamped registers. The table below presents the structure of the function's register content.

Table. 4.5.19 - 288. Register content.

Register	Description
Date and time	dd.mm.yyyy hh:mm:ss.mss
Event	Event name

© Arcteq Relays Ltd
IM00099

Register	Description
f Pre-trig (Hz)	Start/Trip -20ms frequency
f Fault (Hz)	Fault frequency
Setting group in use	Setting group 1...8 active

4.5.20 Rate-of-change of frequency (df/dt>/<; 81R)

The rate-of-change of frequency function is used to detect fast drops or increases in frequency. If the load changes fast this function detects and clears the frequency-based faults faster than conventional underfrequency and overfrequency protections. One of the most common causes for the frequency to deviate from its nominal value is an unbalance between the generated power and the load demand. If the unbalance is big the frequency changes rapidly.

The rate-of-change of frequency protection can also be applied to detect a loss of mains situation. Loss of mains is a situation where a part of the network (incorporating generation) loses its connection with the rest of the system (i.e. becomes an islanded network). A generator that is not disconnected from the network can cause safety hazards. A generator can also be automatically reconnected to the network, which can cause damage to the generator and the network.

Figure. 4.5.20 - 124. Operation of the df/dt>/< function when the frequency starts but doesn't trip.

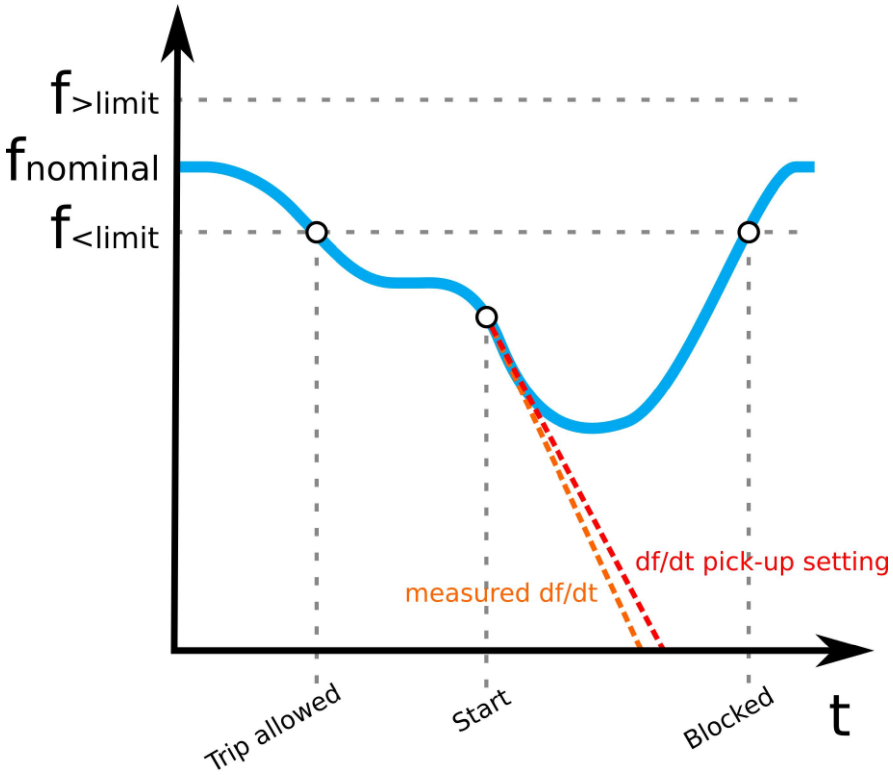

The figure above presents an example of the df/dt>/< function's operation when the frequency is decreasing. If the $f<_{limit}$ and/or $f>_{limit}$ is activated, the function does not trip no matter how fast the measured frequency changes if it's over the $f<_{limit}$ or under $f>_{limit}$. As can be seen in the figure above, when the frequency decreases under the $f<_{limit}$,tripping is allowed although the change of frequency is not yet fast enough for the function to trip. Later the frequency makes a fast dip and as a result the change of frequency is faster than the set pick-up value which then causes the function to operate.

Each stage can be activated and deactivated individually. After the f>/< mode has been activated (*Protection → Stage activation → Frequency stages*), the user can activate and deactivate the individual stages at will (*Protection → Frequency → Frequency protection f >/< → INFO → Stage operational setup*).

Measured input

The rate-of-change of frequency protection function compares the measured df/dt>/< ratio to the pick-up setting (given in Hz/s). There are three (3) frequency references available. Please refer to "Frequency tracking and scaling" chapter for a detailed description of frequency tracking.

Table. 4.5.20 - 289. Measurement inputs of the df/dt>/< function.

Signals	Description
Frequency reference 1	Primary frequency reference
Frequency reference 2	Secondary frequency reference
Frequency reference 3	Tertiary frequency reference

General settings

The following general settings define the general behavior of the function. These settings are static i.e. it is not possible to change them by editing the setting group.

Table. 4.5.20 - 290. General settings of the function.

Name	Range	Step	Default	Description
df/dt >/< LN mode	• On • Blocked • Test • Test/ Blocked • Off	-	On	Set mode of DFT block. This parameter is visible only when *Allow setting of individual LN mode* is enabled in *General* menu.
Max allowed df/dt rate	0.10...50.00 Hz/s	0.10 Hz/s	20 Hz/s	If df/dt rate exceeds this setting, the function is blocked.
df/dt >/< (1...8) enable	• No • Yes	-	No	Enables or disables the stage.
df/dt >/< (1...8) force status to	• Normal • Start • Trip • Blocked	-	Normal	Force the status of the function. Visible only when *Enable stage forcing* parameter is enabled in *General* menu.

Pick-up and time delay

The df/dt>/< (1) pick-up, df/dt>/< (2) pick-up, etc. setting parameters control the pick-up of each stage of the df/dt>/< function. They define the maximum or minimum allowed change of frequency before action from the function. The function constantly calculates the ratio between the pick-up setting and the measured df/dt>/<. The reset ratio of +/- 100 mHz/s is built into the function and is always relative to the pick-up value. The f>/< limit value is used to block the funtion from operating near the nominal frequency.

© Arcteq Relays Ltd

Setting group selection controls the operating characteristics of the function, i.e. the user or user-defined logic can change function parameters while the function is running.

Table. 4.5.20 - 291. Pick-up settings.

Name	Range	Step	Default	Description
df/dt>/< (1…8) used in setting group	• No • Yes	-	No	Enables the protection stage in setting group.
df/dt>/< (1…8) operating mode	• Rising • Falling • Both	-	Rising	Defines the operation mode of the protection stage. In "Rising" mode df/dt function can trip only from increasing frequency. In "Falling" mode df/dt function can trip only from decreasing frequency. "Both" allows df/dt to trip from both.
df/dt>/< (1…8) frequency limit	• Not used • Use f limit	-	Not used	Displays if frequency limits are used or not.
df/dt>/< (1…8) pick-up	0.01…10.00Hz/s	0.01Hz/s	0.2Hz/s	Pick-up setting.
df/dt>/< (1…8) f< limit	7.00…65.00Hz	0.01Hz	49.95Hz	Underfrequency limit. Tripping is permitted when measured frequency is under this value. This parameter is visible only when operation mode is set to "Falling" or "Both".
df/dt>/< (1…8) f> limit	10.00…70.00Hz	0.01Hz	51Hz	Overfrequency limit. Tripping is permitted if measured frequency is above this value. This parameter is visible only when operation mode is set to "Rising" or "Both".

Operating time characteristics for trip and reset

This function supports definite time delay (DT). For detailed information on these delay types please refer to the chapter "General properties of a protection function" and its section "Operating time characteristics".

Read-only parameters

The function's *Info* page displays useful, real-time information on the state of the protection function. It is accessed either through the device's HMI display, or through the setting tool software when it is connected to the device and its Live Edit mode is active.

Table. 4.5.20 - 292. Information displayed by the function.

Name	Range	Step	Description
df/dt >/< LN behaviour	• On • Blocked • Test • Test/Blocked • Off	-	Displays the mode of DFT block. This parameter is visible only when *Allow setting of individual LN mode* is enabled in *General* menu.

Name	Range	Step	Description
Measured df/dt	0.000...20.000Hz/s	0.001Hz/s	Rate-of-change-of-frequency at the moment.
df/dt >/< (1...8) condition	• Normal • Start • Trip • Blocked	-	Displays the status of the protection function.
df/dt >/< (1...8) df/dt meas / df/dt set	0.000...20.000p.u.	0.005p.u.	The ratio between the rate-of-change-of-frequency and the pick-up value.
Expected operating time	0.000...1800.000s	0.005s	Displays the expected operating time when a fault occurs.
Time remaining to trip	-1800.000...1800.000s	0.005s	When the function has detected a fault and counts down time towards a trip, this displays how much time is left before tripping occurs.

Function blocking

The blocking signal is evaluated at the start of each program cycle. The blocking signals are connected to the function's dedicated input, which can be configured in the *IO → Blocking Input Control* tab of the function.

- When the pick-up element activates and the blocking signal is not active, a START signal is generated, and the function starts or continues with the trip time countdown.
- When the pick-up element activates and the blocking signal is active, a BLOCKED signal is generated, and the function does not process the event further.
- When a START signal is already active and the blocking input signal becomes active, the START signal is reset and BLOCKED signal is generated. The release time characteristics are then processed in the same way as when the pick-up signal is reset.

The blocking signal needs to reach the device minimum of 5 ms before the set operating delay has passed in order for the blocking to activate in time.

Events and registers

The rate-of-change of frequency function (abbreviated "DFT" in event block names) generates events and registers from the status changes in the events listed below. The user can select which event messages are stored in the main event buffer: ON, OFF, or both. The events triggered by the function are recorded with a time stamp.

The function's outputs are can be used for direct I/O controlling and user logic programming. The function also provides a resettable cumulative counter for the START, TRIP and BLOCKED events.

Table. 4.5.20 - 293. Event messages.

Event block name	Event names
DFT1	df/dt>/< (1...8) Start ON/OFF
DFT1	df/dt>/< (1...8) Trip ON/OFF
DFT1	df/dt>/< (1...8) Blocked ON/OFF

© Arcteq Relays Ltd

The function registers its operation into the last twelve (12) time-stamped registers. The table below presents the structure of the function's register content.

Table. 4.5.20 - 294. Register content.

Register	Description
Date and time	dd.mm.yyyy hh:mm:ss.mss
Event	Event name
df/dt>/< Pre-trig (Hz/s)	Start/Trip –20ms df/dt>/<
f Pre-trig (Hz)	Start/Trip –20ms frequency
df/dt>/< Fault (Hz/s)	Fault df/dt>/<
f Fault (Hz)	Fault frequency
Setting group in use	Setting group 1...8 active

4.5.21 Power protection (P, Q, S>/<; 32)

The power protection function is for instant and time-delayed, three-phase overpower or underpower protection (active, reactive, or apparent). The user can select the operating mode with parameter settings.

Figure. 4.5.21 - 125. PQ diagram of the pick-up areas in various modes.

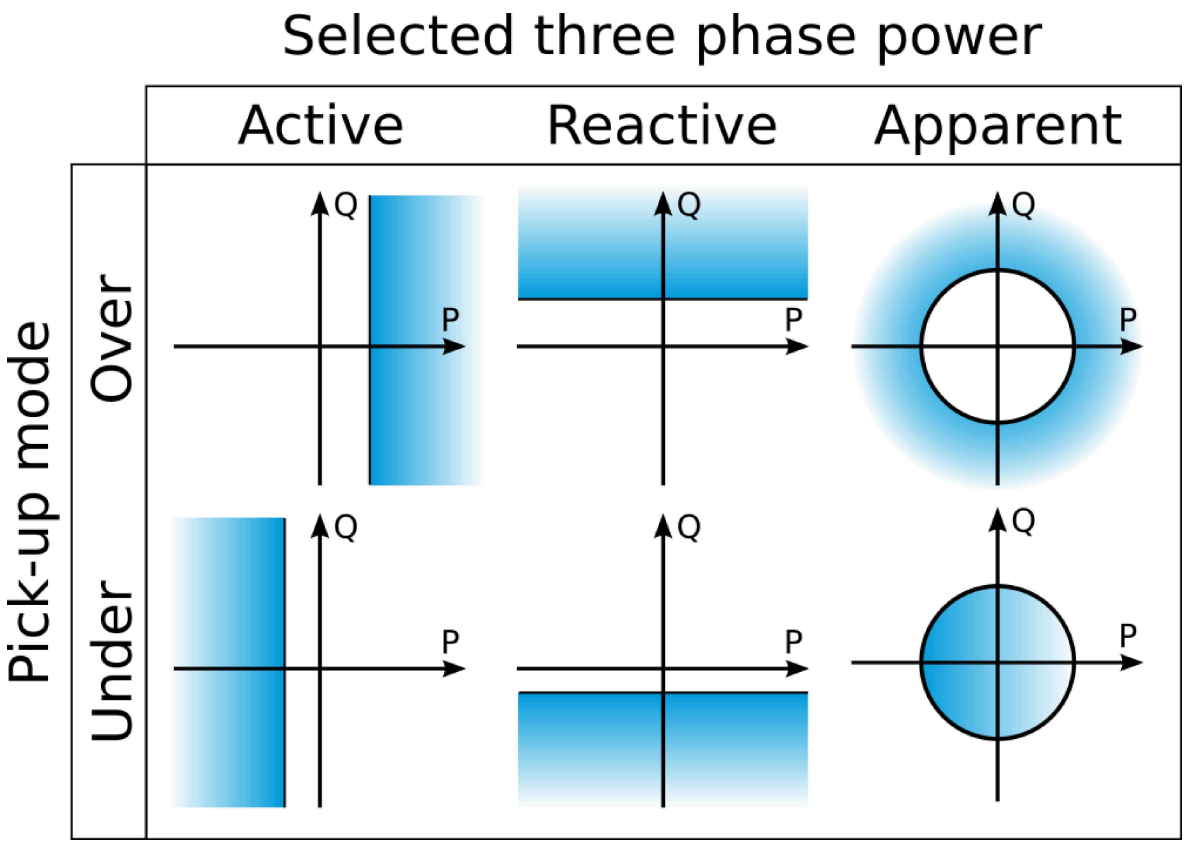

Measured input

The function block uses three phase currents and line-to-neutral or line-to-line voltages to calculate active, reactive or apparent power (as the uset chooses). Please refer to "Power and energy calculation" chapter for a detailed description of power calculation.

Table. 4.5.21 - 295. Measurement inputs of the P> function.

Signal	Description
I_{L1}RMS	Fundamental frequency component of phase L1 (A) current measurement
I_{L2}RMS	Fundamental frequency component of phase L2 (B) current measurement
I_{L3}RMS	Fundamental frequency component of phase L3 (C) current measurement
U_1RMS	Fundamental frequency component of U_1/V voltage measurement
U_2RMS	Fundamental frequency component of U_2/V voltage measurement
U_3RMS	Fundamental frequency component of U_3/V voltage measurement
U_4RMS	Fundamental frequency component of U_4/V voltage measurement

General settings

The following general settings define the general behavior of the function. These settings are static i.e. it is not possible to change them by editing the setting group.

Table. 4.5.21 - 296. General settings of the function.

Name	Range	Default	Description
PQS>/< LN mode	• On • Blocked • Test • Test/ Blocked • Off	On	Set mode of PWR block. This parameter is visible only when *Allow setting of individual LN mode* is enabled in *General* menu.
PQS>/< force status to	• Normal • Start • Trip • Blocked	Normal	Force the status of the function. Visible only when *Enable stage forcing* parameter is enabled in *General* menu.
PQS>/< measurement side	• POW1 • POW2	POW1	Defines which side of power measurement is used. POW1 and POW2 can be set up at *Measurements → Power and energy measurements*.

Pick-up settings

The PQS>/< setting parameter controls the pick-up of the power protection function. This defines the maximum or minimum allowed measured three-phase power (active, reactive, or apparent) before action from the function. The function constantly calculates the ratio between the PQS>/< and the measured power magnitude. The reset ratios of 97 % (pick-up mode "Over") and 103 % (pick-up mode "Under") are built into the function and is always relative to the pick-up value.

© Arcteq Relays Ltd
IM00099

Setting group selection controls the operating characteristics of the function, i.e. the user or user-defined logic can change function parameters while the function is running.

Table. 4.5.21 - 297. Pick-up settings.

Name	Range	Step	Default	Description
Measured magnitude	• P3PH • Q3PH • S3PH	-	P3PH	Defines which three phase power is used: Active, reactive or apparent power.
Nominal MVA reference	• Set manually • Use Gen nom MVA • Use Trafo nom MVA	-	Set manually	Defines whether the used nominal power is set manually or if transformer or generator status monitoring function defines the nominal power automatically.
Set nominal MVA	0.0001...1000.0000MVA	0.0001MVA	10MVA	Nominal MVA used by the function. This parameter is visible only when "Nominal MVA reference" parameter is set to "Set manually"
Pick-up mode	• > Over • < Under	-	Over	Defines whether the function operates in underpower or overpower protection mode.
Pick-up	-500.000…500.000%	0.005%	0%	Pick-up setting. Related to the nominal power set by the user.

Read-only parameters

The function's *Info* page displays useful, real-time information on the state of the protection function. It is accessed either through the device's HMI display, or through the setting tool software when it is connected to the device and its Live Edit mode is active.

Table. 4.5.21 - 298. Information displayed by the function.

Name	Range	Step	Description
PQS>/< LN behaviour	On Blocked Test Test/Blocked Off	-	Displays the mode of PWR block. This parameter is visible only when *Allow setting of individual LN mode* is enabled in *General* menu.
PQS>/< condition	Normal Start Trip Blocked	-	Displays the status of the protection function.
PQS>/< selected measurement	POW1CT1 POW1CT2 POW2CT1 POW2CT2 Undefined	-	Displays the selected power measurement. This indication is visible if the device has more than one current measurement unit.
Nominal MVA used	0.000...1800.000MVA	0.001MVA	Displays the nominal power used by the function. This parameter is displayed if "Nominal MVA reference" parameter has been set to "Use Gen nom MVA" or "Use Trafo nom MVA".

Name	Range	Step	Description
Pick-up setting	-1800.000...1800.000MVA	0.001MVA	Pick-up setting used at the moment by the function. Value of this parameter can change if setting group has been changed.
Measurement now	-1800.000...1800.000MVA	0.001MVA	Measured active, reactive or apparent power at the moment.
Meas/Set at the moment	-1250.00...1250.00p.u.	0.01p.u.	Ratio between the measured power and pick-up setting.
Meas/Nom at the moment	-1250.00...1250.00p.u.	0.01p.u.	Ratio between the measured power and used nominal power value.
Expected operating time	0.000...1800.000s	0.005s	Displays the expected operating time when a fault occurs.
Time remaining to trip	-1800.000...1800.000s	0.005s	When the function has detected a fault and counts down time towards a trip, this displays how much time is left before tripping occurs.

Function blocking

The blocking signal is evaluated at the start of each program cycle. The blocking signals are connected to the function's dedicated input, which can be configured in the *IO → Blocking Input Control* tab of the function.

- When the pick-up element activates and the blocking signal is not active, a START signal is generated, and the function starts or continues with the trip time countdown.
- When the pick-up element activates and the blocking signal is active, a BLOCKED signal is generated, and the function does not process the event further.
- When a START signal is already active and the blocking input signal becomes active, the START signal is reset and BLOCKED signal is generated. The release time characteristics are then processed in the same way as when the pick-up signal is reset.

The blocking signal needs to reach the device minimum of 5 ms before the set operating delay has passed in order for the blocking to activate in time.

Operating time characteristics for trip and reset

This function supports definite time delay (DT). For detailed information on these delay types please refer to the chapter "General properties of a protection function" and its section "Operating time characteristics".

Events and registers

The power protection function (abbreviated "PWR" in event block names) generates events and registers from the status changes in the events listed below. The user can select which event messages are stored in the main event buffer: ON, OFF, or both. The events triggered by the function are recorded with a time stamp.

The function's output can be used for direct I/O controlling and user logic programming. The function also a resettable cumulative counter for the START, TRIP and BLOCKED events.

The function offers four (4) independent stages; the events are segregated for each stage operation.

© Arcteq Relays Ltd
IM00099

Table. 4.5.21 - 299. Event messages.

Event block name	Event names
PWR1...PWR4	Start ON/OFF
PWR1...PWR4	Trip ON/OFF
PWR1...PWR4	Block ON/OFF

The function registers its operation into the last twelve (12) time-stamped registers. The register of the function records the ON event process data for START, TRIP or BLOCKED. The table below presents the structure of the function's register content.

Table. 4.5.21 - 300. Register content.

Register	Description
Date and time	dd.mm.yyyy hh:mm:ss.mss
Event	Event name
Pre-trigger power	Start/Trip -20ms power
Fault power	Start/Trip power
Pre-fault power	Start -200ms power
Trip time remaining	0 ms...1800s
Setting group in use	Setting group 1...8 active

4.5.22 Transformer status monitoring

The transformer status monitoring function is designed to be the one place where the user can set up all necessary transformer data and select the used transformer protection functions. Settings related to the protection functions can also be edited inside each function and any changes are updated into this function as well. The function calculates many transformer-related properties which are used in functions that protect and monitor the transformer. Standard transformers require only name plate data and CT scalings to get the protection device to automatically scale all measurement signals to the transfomer. In special transformers manually set values can be applied to cover the transformer properties that are rarely met. Additionally, the function counts a transformer's cumulative overloading and high overcurrent time.

These signals can be used in indication or in logic programming, and they are the basis for the events the function generates (if so chosen).

The function's outputs are dependent on the set transformer data because the measured currents (in p.u.) are related to the transformer nominal values. The following diagram presents the function's outputs in various situations.

Figure. 4.5.22 - 126. Activation of the function's outputs.

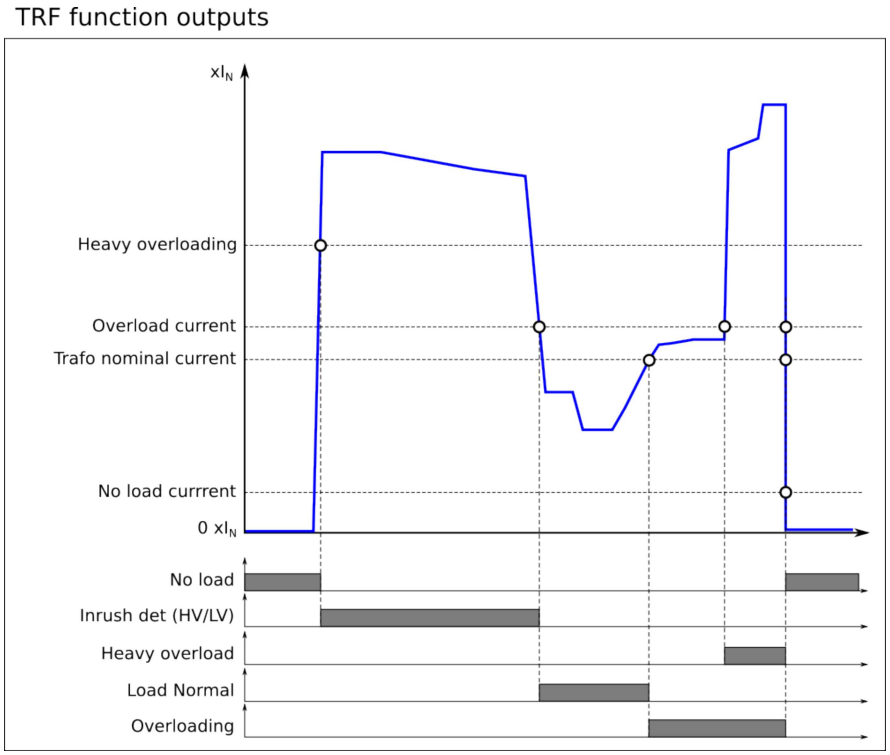

The *No load* signal is activated when the current dips below the "No load current" limit (= 0.2 x I_n)" for longer than ten milliseconds. If the current increases from this situation up to the "Heavy overloading" limit (> 1.3 x I_n), the *HV inrush detection* and *LV inrush detection* signals are activated. If the measured current is between the "No load current" limit and the "Nominal current" limit, the *Load normal* signal is activated. If the measured current is between the "Nominal" and the "Heavy overloading" currents, the *Overloading* signal is activated.

These signals can be used for multiple purposes: information, transformer-related logics, and monitoring. A constant, long-lasting heavy overloading can cause oil ageing in the transformer, and thus more frequent maintenance is recommended to prevent possible problems in the transformer.

Settings and signals

The settings of the transformer status monitoring function are mostly shared with other transformer protection functions in the transformer module of the device. The following table shows these other functions that also use these settings.

Table. 4.5.22 - 301. Settings of the transformer status monitoring function and how they are shared by other protection functions.

Name	Range	Step	Default	Description
TRF LN mode	• On • Blocked • Test • Test/ Blocked • Off	-	On	Set mode of MST block. This parameter is visible only when *Allow setting of individual LN mode* is enabled in *General* menu.

© Arcteq Relays Ltd

Name	Range	Step	Default	Description
TRF LN behaviour	• On • Blocked • Test • Test/ Blocked • Off	-	-	Displays the mode of MST block. This parameter is visible only when *Allow setting of individual LN mode* is enabled in *General* menu.
Transformer parameters controlled by SG	• No • Yes	-	No	If this parameter is set to "Yes" it is possible to change transformer nameplate values instantly by switching between up to eight (8) setting groups. See "Transformer setting groups" section below.
TRF force status to	• NoForce • Light/ Noload • HV inrush • LV inrush • Normload • Overload • High Overload	-	NoForce	Force the status of the function. Visible only when *Enable stage forcing* parameter is enabled in *General* menu.
Transformer nominal	0.1...500.0MVA	0.1MVA	1.0MVA	The nominal MVA of the transformer. This value is used to calculate the nominal currents onf both the HV and the LV side.
HV side nominal voltage	0.1…500.0kV	0.1kV	110.0kV	The HV side nominal voltage of the transformer. This value is used to calculate the nominal currents of the HV side.
LV side nominal voltage	0.1…500.0kV	0.1kV	110.0kV	The LV side nominal voltage of the transformer. This value is used to calculate the nominal currents of the LV side.
Transformer Zk%	0.01…25.00%	0.01%	3.00%	The transformer's short-circuit impedance in percentages. Used for calculating short-circuit current.
Transformer nom. freq.	10…75Hz	1Hz	50Hz	The transformer's nominal frequency. Used for calculating the transformer's nominal short-circuit inductance.

Name	Range	Step	Default	Description
Transf. vect. group	• Manual set • Yy0 • Yyn0 • YNy0 • YNyn0 • Yy6 • Yyn6 • YNy6 • YNyn6 • Yd1 • YNd1 • Yd7 • YNd7 • Yd11 • YNd11 • Yd5 • YNd5 • Dy1 • Dyn1 • Dy7 • Dyn7 • Dy11 • Dyn11 • Dy5 • Dyn5 • Dd0 • Dd6	-	Yy0	The selection of the transformer's vector group. The selection values (1–26) are predefined so that the scaling and vector matching are applied in the protection device automatically when the correct vector group is selected. The predefinitions assume that the HV side is connected to the CT1 module and that the LV side is connected to the CT2 module. If the protected transformer vector group is not found in the predefined list, it can be manually set by selecting the option "Manual set".
HV side Star or Zigzag / Delta	• Star/Zigzag • Delta	-	Star/ Zigzag	The selection of the HV side connection. Can be selected between star or zigzag and delta. This selection is visible only if the option "Manual set" is selected for the vector group setting.
HV side earthed	• Not earthed • Earthed	-	Not earthed	The selection of whether or not the zero sequence compensation is applied in the HV side current calculation. The selection is visible only if the option "Manual set" is selected for the vector group setting.
HV side lead or lag LV	• Lead • Lag	-	Lead	The selection of whether the HV side leads or lags the LV side. The selection is visible only if the option "Manual set" is selected for the vector group setting.
LV side Star or Zigzag / Delta	• Star/Zigzag • Delta	-	Star/ Zigzag	The selection of the LV side connection. Can be selected between star or zigzag and delta. This selection is visible only if the option "Manual set" is selected for the vector group setting.
LV side earthed	• Not earthed • Earthed	-	Not earthed	The selection of whether or not the zero sequence compensation is applied in the LV side current calculation. The selection is visible only if the option "Manual set" is selected for the vector group setting.
LV side lead or lag HV	• Lead • Lag	-	Lead	The selection of whether the LV side leads or lags the HV side. The selection is visible only if the option "Manual set" is selected for the vector group setting.
HV-LV side phase angle	0.0...360.00deg	0.1deg	0.0deg	The angle correction factor for HV/LV sides, looked from the HV side. E.g. if the transformer is Dy1, this is set to 30 degrees. The selection is visible only if the option "Manual set" is selected for the vector group setting.

© Arcteq Relays Ltd

Name	Range	Step	Default	Description
HV-LV side mag correction	0.0…100.0xI_n	0.1xI_n	0.0xI_n	The magnitude correction for the HV-LV side currents (in p.u.), if the currents are not directly matched through the calculations of the nominal values. The selection is visible only if the option "Manual set" for the vector group setting.
Check online HV-LV configuration	• - • Check	-	-	The selection of whether or not the function checks the current going through the transformer and then compares it to the settings. For this to work, the transformer needs to have a current flowing on both sides and "see" no faults. The selection is visible only if the option "Manual set" is selected for the vector group setting.

Table. 4.5.22 - 302. Calculations of the transformer status monitoring function.

Name	Range	Step	Default	Description
HV side nominal current (pri)	0.01...50 000.00A	0.01A	0.00A	The calculated primary current of the transformer's HV side primary current.
HV side nominal current (sec)	0.01…250.00A	0.01A	0.00A	The calculated primary current of the transformer's HV side secondary current.
HV CT nom. to TR nom. factor	0.01…250.00p.u.	0.01p.u.	0.00p.u.	The transformer's HV side calculated nominal to the CT primary rate.
LV side nominal current (pri)	0.01…50 000.00A	0.01A	0.00A	The calculated primary current of the transformer's LV side primary current.
LV side nominal current (sec)	0.01…250.00A	0.01A	0.00A	The calculated primary current of the transformer's LV side secondary current.
LV CT nom. to TR nom. factor	0.01…250.00p.u.	0.01p.u.	0.00p.u.	The transformer's LV side calculated nominal to the CT primary rate.
Transformer nom. impedance	0.01…250.00Ω	0.01Ω	0.00Ω	The calculated nominal impedance of the transformer.
Transformer nom. Zk	0.01…250.00Ω	0.01Ω	0.00Ω	The calculated nominal short-circuit impedance of the transformer.
Transformer nom. SC inductance	0.001…250.000µH	0.01µH	0.000µH	The calculated nominal short-circuit inductance of the transformer.
Transformer ratio	0.01…250.00	0.01	0.00	The transformer's calculated ratio (= HV/LV).
LV side max. 3ph SC curr.	0.001…500.000kA	0.001kA	0.000kA	The calculated maximum three-phase short-circuit current in the LV poles of the transformer.
LV side 3ph SC to HV side	0.001…500.000kA	0.001kA	0.000kA	Shows how the calculated maximum three-phase short-circuit current in the LV side is seen in the HV side.

Name	Range	Step	Default	Description
LV side max. 2ph SC curr.	0.001…500.000kA	0.001kA	0.000kA	The calculated maximum two-phase short-circuit current in the LV poles of the transformer.
LV side 2ph SC to HV side	0.001...500.000kA	0.001kA	0.000kA	Shows how the calculated maximum two-phase short-circuit current in the LV side is seen in the HV side.

Table. 4.5.22 - 303. Output signals of the transformer status monitoring function.

Name	Description
No/Light load	The signal is active, when the function detects a current below the "No load current" limit. This signal presents a situation where there is a very light load, or only one or no side of the transformer is energized.
HV side inrush detected	The signal is active, when the detected current rises above the "High overcurrent" limit in the HV side.
LV side inrush detected	The signal is active, when the detected current rises above the "High overcurrent" limit in the LV side.
Load normal	The signal is active when the measured current is below the "Nominal current" but above the "No load current" limit.
Overloading	The signal is active, when the measured current is between the "Nominal current" and the "High overcurrent" limits.
Heavy overloading (HVY overloading)	The signal is active, when the measured current is above the "High overcurrent" limit.

Events

The transformer status monitoring function (abbreviated "TRF" in event block names) generates events from the detected transformer energizing status. The data register is available, based on the events.

Table. 4.5.22 - 304. Event messages.

Event block name	Event names
TRF1	Light/No load ON/OFF
TRF1	HV side inrush ON/OFF
TRF1	LV side inrush ON/OFF
TRF1	Load normal ON/OFF
TRF1	Overloading ON/OFF
TRF1	High overload ON/OFF
TRF1	Setting changes, calculating new transformer data
TRF1	Calculation finished, possible restart

© Arcteq Relays Ltd

The function registers its operation into the last twelve (12) time-stamped registers. The table below presents the structure of the function's register content.

Table. 4.5.22 - 305. Register content.

Register	Description
Date and time	dd.mm.yyyy hh:mm:ss.mss
Event	Event name
HV L1 current	HV side's Phase L1 current x I_n
HV L2 current	HV side's Phase L2 current x I_n
HV L3 current	HV side's Phase L3 current x I_n
LV L1 current	LV side's Phase L1 current x I_n
LV L2 current	LV side's Phase L2 current x I_n
LV L3 current	LV side's Phase L3 current x I_n

Transformer setting groups

If "Transformer parameters controlled by SG" parameter has been set to "Yes" it is possible to instantly change transformer parameters by changing the active setting group. Transformer parameter setting groups are controlled separately from the general setting group control. This allows for changing the following transformer nameplate values without changing the protection parameters:

- Transformer nominal MVA
- HV side nominal voltage
- LV side nominal voltage
- Transformer vector group
- Transformer Zk %
- Transformer nominal frequency

Setting group selection can be applied to each of the setting groups individually by activating one of the various internal logic inputs or connected digital inputs. The user can also force any of the setting groups on when the "Force SG change" setting is enabled by giving the wanted quantity of setting groups as a number in the communication bus or in the local HMI, or by selecting the wanted setting group from *Control → Setting groups*. When the forcing parameter is enabled, the automatic control of the local device is overridden and the full control of the setting groups is given to the user until the "Force SG change" is disabled again.

Setting groups can be controlled either by pulses or by signal levels. The setting group controller block gives setting groups priority values for situations when more than one setting group is controlled at the same time: the request from a higher-priority setting group is taken into use.

Setting groups follow a hierarchy in which setting group 1 has the highest priority, setting group 2 has second highest priority etc. If a static activation signal is given for two setting groups, the setting group with higher priority will be active. If setting groups are controlled by pulses, the setting group activated by pulse will stay active until another setting groups receives and activation signal.

Figure. 4.5.22 - 127. Example sequences of group changing (control with pulse only, or with both pulses and static signals).

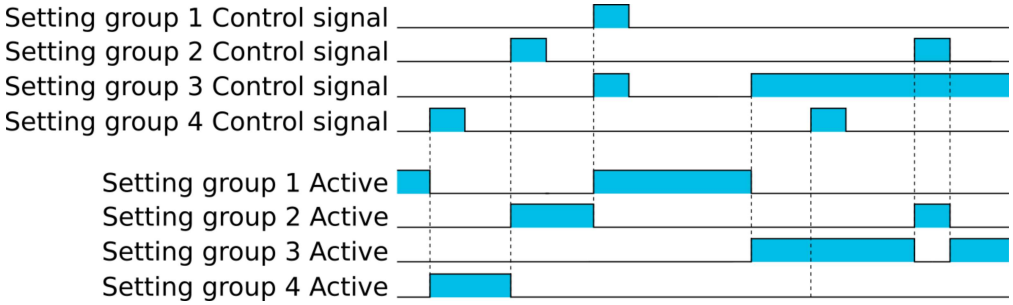

The settings of the setting group control function include the active setting group selection, the forced setting group selection, the enabling (or disabling) of the forced change, the selection of the number of active setting groups in the application, as well as the selection of the setting group changed remotely. If the setting group is forced to change, the corresponding setting group must be enabled and the force change must be enabled. Then, the setting group can be set from communications or from HMI to any available group. If the setting group control is applied with static signals right after the "Force SG" parameter is released, the application takes control of the setting group selection.

Table. 4.5.22 - 306. Settings of the setting group selection function.

Name	Range	Default	Description
Active setting group	• SG1 • SG2 • SG3 • SG4 • SG5 • SG6 • SG7 • SG8	SG1	Displays which setting group is active.
Force setting group	• None • SG1 • SG2 • SG3 • SG4 • SG5 • SG6 • SG7 • SG8	None	The selection of the overriding setting group. After "Force SG change" is enabled, any of the configured setting groups in the device can be overriden. This control is always based on the pulse operating mode. It also requires that the selected setting group is specifically controlled to ON after "Force SG" is disabled. If there are no other controls, the last set setting group remains active.
Force setting group change	• Disabled • Enabled	Disabled	The selection of whether the setting group forcing is enabled or disabled. This setting has to be active before the setting group can be changed remotely or from a local HMI. This parameter overrides the local control of the setting groups and it remains on until the user disables it.
Used setting groups	• SG1 • SG1...2 • SG1...3 • SG1...4 • SG1...5 • SG1...6 • SG1...7 • SG1...8	SG1	The selection of the activated setting groups in the application. Newly-enabled setting groups use default parameter values.

© Arcteq Relays Ltd

Name	Range	Default	Description
Remote setting group change	• None • SG1 • SG2 • SG3 • SG4 • SG5 • SG6 • SG7 • SG8	None	This parameter can be controlled through SCADA to change the setting group remotely. Please note that if a higher priority setting group is being controlled by a signal, a lower priority setting group cannot be activated with this parameter.

Table. 4.5.22 - 307. Signals of the setting group selection function.

Name	Description
Setting group 1	The selection of Setting group 1 ("SG1"). Has the highest priority input in setting group control. Can be controlled with pulses or static signals. If static signal control is applied, no other SG requests will be processed.
Setting group 2	The selection of Setting group 2 ("SG2"). Has the second highest priority input in setting group control. Can be controlled with pulses or static signals. If static signal control is applied, no requests with a lower priority than SG1 will be processed.
Setting group 3	The selection of Setting group 3 ("SG3"). Has the third highest priority input in setting group control. Can be controlled with pulses or static signals. If static signal control is applied, no requests with a lower priority than SG1 and SG2 will be processed.
Setting group 4	The selection of Setting group 4 ("SG4"). Has the fourth highest priority input in setting group control. Can be controlled with pulses or static signals. If static signal control is applied, no requests with a lower priority than SG1, SG2 and SG3 will be processed.
Setting group 5	The selection of Setting group 5 ("SG5"). Has the fourth lowest priority input in setting group control. Can be controlled with pulses or static signals. If static signal control is applied, SG6, SG7 and SG8 requests will not be processed.
Setting group 6	The selection of Setting group 6 ("SG6"). Has the third lowest priority input in setting group control. Can be controlled with pulses or static signals. If static signal control is applied, SG7 and SG8 requests will not be processed.
Setting group 7	The selection of Setting group 7 ("SG7"). Has the second lowest priority input in setting group control. Can be controlled with pulses or static signals. If static signal control is applied, only SG8 requests will not be processed.
Setting group 8	The selection of Setting group 8 ("SG8"). Has the lowest priority input in setting group control. Can be controlled with pulses or static signals. If static signal control is applied, all other SG requests will be processed regardless of the signal status of this setting group.

The setting group selection function block (abbreviated "SGS2" in event block names) generates events from its controlling status, its applied input signals, enabling and disabling of setting groups, as well as unsuccessful control changes. The events triggered by the function are recorded with a time stamp.

Table. 4.5.22 - 308. Event messages.

Event block name	Event names
SGS2	SG2...SG8 Enabled/Disabled

Event block name	Event names
SGS2	SG1...SG8 Request ON/OFF
SGS2	Remote Change SG Request ON/OFF
SGS2	Local Change SG Request ON/OFF
SGS2	Force Change SG ON/OFF
SGS2	SG Request Fail Not configured SG ON/OFF
SGS2	Force Request Fail Force ON/OFF
SGS2	SG Req. Fail Lower priority Request ON/OFF
SGS2	SG1...SG8 Active ON/OFF

4.5.23 Motor status monitoring

The motor status monitoring function is designed to be the one place where the user can set up all necessary motor data and select the used motor protection functions. Settings related to the protection functions can also be edited inside each function and any changes are updated into this function as well. In addition to the motor data settings, this function counts the number of times the motor starts, the number of times the motor start has succeeded, and the number of times the motor has been stopped. The function also keeps track of the running time and the starting time. Additionally, the function has a cumulative counter that tells the overall time the motor has been stopped, and it shows the last time the motor was stopped.

The signals can be used in indication or in application logics. They are also the basis of the events the function generates (if so chosen).

The function's outputs are dependent on the motor data the user has set. The following two diagram present the function's outputs in various situations.

© Arcteq Relays Ltd

Figure. 4.5.23 - 128. Activation of the function's outputs.

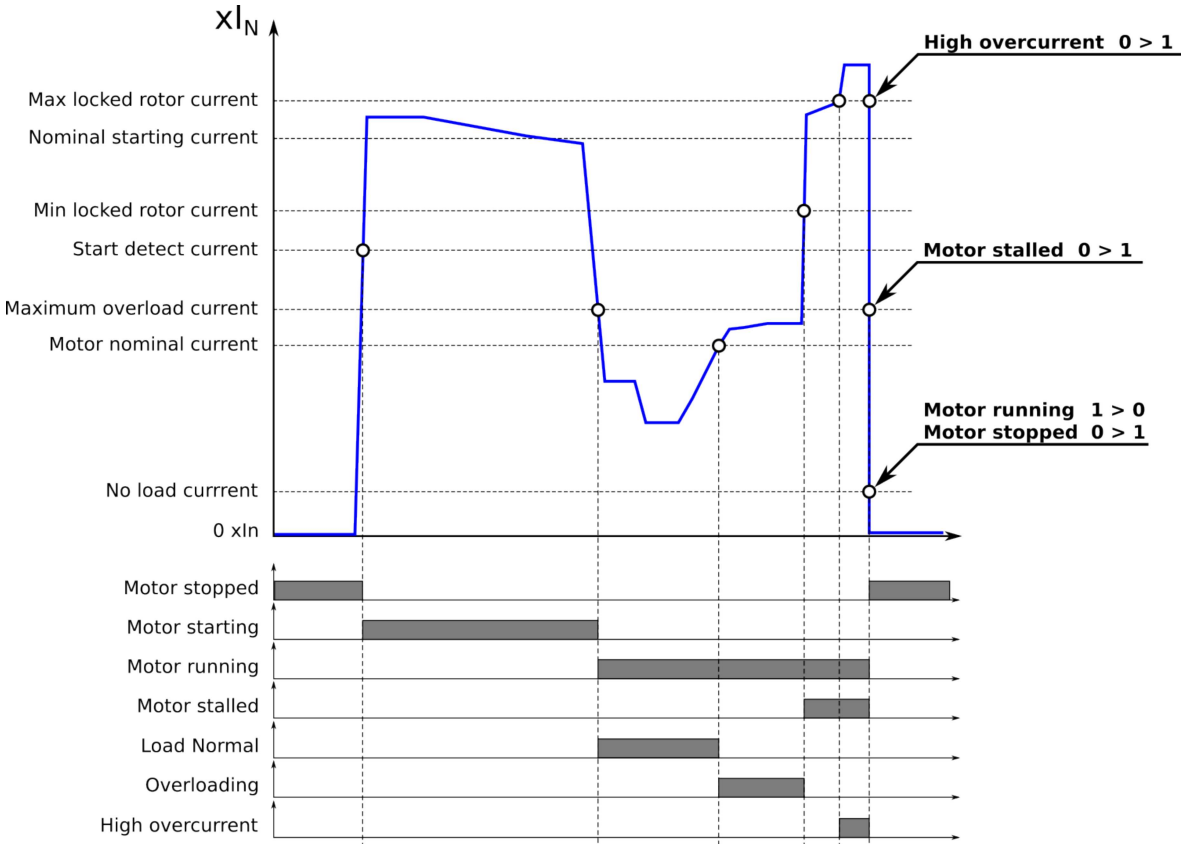

The *Motor stopped* signal is activated when the current is below the “No load current” limit for longer than 10 ms. When the current increases from this status to above the “Start detect current” setting, a start of the motor is detected and the *Motor starting* signal is activated. If the current stays below the “Max locked rotor current” setting, the start-up situation continues. When the current decreases below the “Maximum overload current” setting, the start situation is considered to be over and the motor running, resulting in the activation of the *Motor running* signal. When the measured current is between the “No load current” and the "Motor nominal current" (including the service factor and the ambient temperature factor), the load is considered to be normal, activating the *Load Normal* signal. If the current then starts rising, and exceeds the “Motor nominal current” setting but does not exceed the “Maximum overload current” setting, the *Overloading* signal is activated. If the current does exceed the “Maximum overload current” setting, the *Motor stalled* signal is activated. If the current exceeds the “Max locked rotor current” setting, the *High overcurrent* signal is activated. When the measured current decreases below the “No load current” setting, the *Motor stopped* signal is activated again. The *Missing phase* signal is activated only if one of the phases is lost during *Motor starting* or *Motor running* and the measured current in that phase is reduced below the “No load current” setting.

These motor status signals can be used in the motor protection scheme to block overcurrent stages, to change setting groups, and to release blockings (e.g if something happens during start-up).

Figure. 4.5.23 - 129. Example of application: motor starting scheme and using motor status signals.

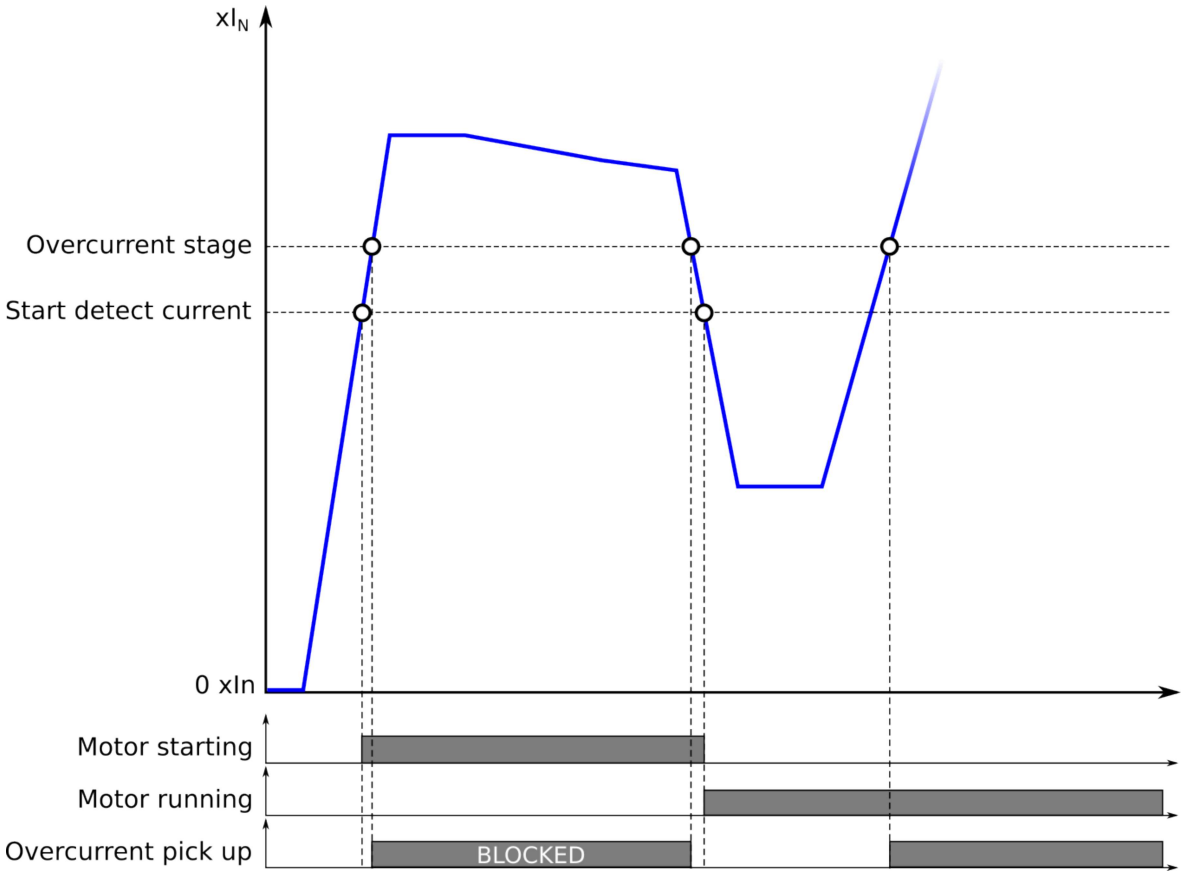

When a motor is starting, an overcurrent stage with a low pick-up setting is either blocked or –as in some protection relays– the setting value is multiplied by a prescribed factor. This prevents the protection stage from activating and the motor from starting, especially when the low-set overcurrent stage has an operating time that is shorter than the start-up time of the protected motor. The figure above presents how the START signals behave during a motor start-up.

Settings and signals

The settings of the motor status monitoring function are mostly shared with other motor protection functions in the device's motor module.

Table. 4.5.23 - 309. Settings of the motor status monitoring function.

Name	Range	Step	Default	Description
MST LN mode	• On • Blocked • Test • Test/Blocked • Off	-	On	Set mode of MST block. This parameter is visible only when *Allow setting of individual LN mode* is enabled in *General* menu.
MST LN behaviour	• On • Blocked • Test • Test/Blocked • Off	-	-	Displays the mode of MST block. This parameter is visible only when *Allow setting of individual LN mode* is enabled in *General* menu.

© Arcteq Relays Ltd

Name	Range	Step	Default	Description
MST force status to	• NoForce • MotStop • MotStart • MotRun • MotStall • LoadNotSym • NormLoad • Overload • HighOverload	-	Normal	Force the status of the function. Visible only when *Enable stage forcing* parameter is enabled in *General* menu.
Motor Start	• DOL • Star-Delta • Soft start	-	DOL	The motor starting mode selection. The user can select between Direct On Line (DOL), Star-Delta and Soft start in future releases.
Motor nominal current	0.1...5000 A	0.1 A	-	The motor's nominal current in amperes.
Motor In Scaled	0.1...40.0xI_n	0.1xI_n	-	The motor's nominal current scaled to per unit. If the user selects *Object In* in the CT settings, this value should be 1.00. If scaled to the CT nominal, this value may vary.
Nominal starting current	0.1…40.0xI_n	0.1xI_n	6.0xI_n	The motor's locked rotor current with the nominal voltage. This setting is used for automatic curve selection and calculation. Also, the nominal starting capacity calculation is based on this value.
Nominal starting current A	0.1...5000A	0.1A	-	The motor's locked rotor current in amperes.
Start detect current	0.1…40.0xI_n	0.1xI_n	1.5xI_n	The motor starting current detection limit. When in DOL or Star-Delta mode, this setting defines the motor starting moment when the measured current exceeds both the no-load current limit and the start detect current limit within a ten-millisecond period. If the current increases slower, it is not defined as a motor start.
Start detect current A	0.1...5000A	0.1A	-	The motor's starting current detection limit in amperes.
Min locked rotor current	0.1…40.0xI_n	0.1xI_n	3.5xI_n	The motor's minimum locked rotor current. This setting defines the current limit for when this current is exceeded while the automatic curve selection and the control only short time constant (stall) are in use.
Min locked rotor current A	0.1...5000A	0.1A	-	The motor's minimum locked rotor current. This setting defines the current limit for when this current is exceeded while the automatic curve selection and the control only short time constant (stall) are in use.
Max locked rotor current	0.1…40.0xI_n	0.1xI_n	7.5xI_n	Maximum locked rotor current of the motor. This setting defines the current limit which is maximum current for the motor to draw in locked rotor situation (starting or stalled). If the measured current exceeds this setting limit it is considered to be overcurrent fault and corresponding measures can be applied to disconnect the feeder and motor from the supply.

Name	Range	Step	Default	Description
Max locked rotor current A	0.1...5000A	0.1A	-	The maximum locked rotor current in amperes.
Maximum overload current	0.1…40.0xI_n	0.1xI_n	2.0xI_n	The motor's maximum overload current. Exceeding this setting stalls the motor. This setting defines when the thermal replica switches to the short (stall) time constant. As long as the current stays below this setting value, the motor should run even when overloaded.
Maximum overload current A	0.1...5000A	0.1A	-	The motor's maximum overload current in amperes.
No load current <	0.1…40.0xI_n	0.1xI_n	0.2xI_n	The motor's no load current. This setting defines the “Stopped” condition when the current is below this setting value. Also, when the current is below this value, the undercurrent protection stage is locked.
No load current < A	0.1...5000A	0.1A	-	The motor's no load current in amperes.
Motor service factor	0.01…5.00xI_n	0.01xI_n	1.00xI_n	Service factor which corrects the maximum allowed loading according to various conditions (e.g. installation, construction, etc.) which vary from the presumption conditions. Frequently motors are stamped to a service factor of 1.15: this means that they can withstand a continuous 15% overloading from the rated current (as this is not necessary in all conditions, it is recommended to consult the motor's datasheet or manual for details). If the service factor is not known, this parameter should be left at its default setting of 1.00 x I_n.
Hot condition theta limit	0.0…100.0%	0.1%	70%	Setting the motor's thermal limit in a hot or a cold situation. When this setting value is not exceed while a locked rotor situation occurs, the function uses a cold stall curve adjusted with the actually used thermal capacity. The function uses a hot stall curve when this setting value is exceeded. This setting also applies to starts when the hot/cold selection is in use. Please note that using this setting requires that the Machine thermal overload protection (Tm>) function is activated and in use.
Safe stall time cold	0.1…600.0s	0.1s	20.0s	The safe stall time when the motor is cold. Unless this value is specified, it is set to be equal to the hot stall time. Most probably this leads to overprotection with the cold motor stall (best case scenario). This setting value is used for the cold thermal stall curve selection in automatic control. This parameter is also used in the motor start-up and the number of starts calculations.
Safe stall time hot	0.1…600.0s	0.1s	15.0s	The safe stall time when the motor is hot. This setting value is used for the hot thermal stall curve selection in automatic control. This parameter is also used in the motor start-up and the number of starts calculations.
Allowed starts when cold	1…100	1	3	The number of allowed starts per x hours for a cold motor.

© Arcteq Relays Ltd

Name	Range	Step	Default	Description
Allowed starts when hot	1…100	1	2	The number of allowed starts per x hours for a hot motor.
Given hot/ cold starts in time of	1…100h	1h	1h	The number of hours when the parameters of the number of allowed starts (hot and cold) apply.
Min time between starts	0.1…600.0s	0.1s	20.0s	The minimum time between starts or start attempts.
Overall differential protection	• Machine diff. (Yy) • Diff.with trafo (Xx)	-	Machine diff. (Yy)	Defines if current transformers are installed to both sides of transformer or just to both sides of motor. Transformer related settings appear when "Diff.with trafo (Xx)".
Tranf. vector group	• Manual set • Yy0 • Yyn0 • YNy0 • YNyn0 • Yy6 • Yyn6 • YNy6 • YNyn6 • Yd1 • YNd1 • Yd7 • YNd7 • Yd11 • YNd11 • Yd5 • YNd5 • Dy1 • Dyn1 • Dy7 • Dyn7 • Dy11 • Dyn11 • Dy5 • Dyn5 • Dd0 • Dd6	-	Yy0	The selection of the transformer's vector group. The selection values are predefined so that the scaling and vector matching are applied in the protection device automatically when the correct vector group is selected. The predefinitions assume that the HV side is connected to the CT1 module and that the LV side is connected to the CT2 module. If the protected transformer vector group is not found in the predefined list, it can be manually set by selecting the option "Manual set".
HV side Star or Zigzag / Delta	• Star/Zigzag • Delta	-	Star/ Zigzag	The selection of the HV side connection. Can be selected between star or zigzag and delta. This selection is visible only if the option "Manual set" is selected for the vector group setting.
HV side earthed	• Not earthed • Earthed	-	Not earthed	The selection of whether or not the zero sequence compensation is applied in the HV side current calculation. The selection is visible only if the option "Manual set" is selected for the vector group setting.
LV side Star or Zigzag / Delta	• Star/Zigzag • Delta	-	Star/ Zigzag	The selection of the LV side connection. Can be selected between star or zigzag and delta. This selection is visible only if the option "Manual set" is selected for the vector group setting.

Name	Range	Step	Default	Description
LV side earthed	• Not earthed • Earthed	-	Not earthed	The selection of whether or not the zero sequence compensation is applied in the LV side current calculation. The selection is visible only if the option "Manual set" is selected for the vector group setting.
LV side lead or lag HV	• Lead • Lag	-	Lead	The selection of whether the LV side leads or lags the HV side. The selection is visible only if the option "Manual set" is selected for the vector group setting.
HV-LV side phase angle	0.0...360.00deg	0.1deg	0.0deg	The angle correction factor for HV/LV sides, looked from the HV side. E.g. if the transformer is Dy1, this is set to 30 degrees. The selection is visible only if the option "Manual set" is selected for the vector group setting.
HV-LV side mag correction	0.0…100.0xI_n	0.1xI_n	0.0xI_n	The magnitude correction for the HV-LV side currents (in p.u.), if the currents are not directly matched through the calculations of the nominal values. The selection is visible only if the option "Manual set" for the vector group setting.
Enable Id0> (REF) HV side	• Disabled • Enabled	-	Disabled	The selection of whether the restricted earth fault stage on the HV side is enabled or disabled.
Enable Id0> (REF) LV side	• Disabled • Enabled	-	Disabled	The selection of whether the restricted earth fault stage on the LV side is enabled or disabled.
HV side starpoint meas.	• I01 • I02	-	I01	The selection of the starpoint measurement channel for the restricted earth fault protection on the HV side. This setting is only visible if the option "Enabled" is selected for the "Enable I0d> (REF) HV side" setting.
LV side starpoint meas.	• I01 • I02	-	I01	The selection of the starpoint measurement channel for the restricted earth fault protection on the LV side. This setting is only visible if the option "Enabled" is selected for the "Enable I0d> (REF) LV side" setting.

Table. 4.5.23 - 310. Output signals of the motor status monitoring function.

Name	Description
Motor stopped	The *Motor stopped* signal is active when the function detects a current below the set value of "No load current". This signal presents a situation when a motor is not running.
Motor starting	The *Motor starting* signal is active when a motor start-up is detected. In DOL mode, the signal is active when the measured current exceeds the "Start detect current" (from the Motor stopped situation); the signal deactivates when the current decreases below the "Max overloading current".
Motor running	The *Motor running* signal is active when the measured current is above the set "No load current" (as long as the Motor starting situation has passed). This signal is released when the measured current is below the "No load current" setting.
Motor stalled	The *Motor stalled* signal is active when the measured current exceeds the "Max overload current" setting (from the Motor running situation).

© Arcteq Relays Ltd

Name	Description
Missing phase	The *Missing phase* signal is activated when the measured current of one phase is below the "No load current" setting, and the measured currents of two phases are above the "Min locked rotor current" setting. This signal can be used for quickly halting the motor's start-up if one phase is lost and the motor cannot start.
Load Normal	The *Load normal* signal is active when the measured current is above the set "No load current" and below the motor's nominal current (including the ambient and service factor corrections).
Overloading	The *Overloading* signal is active when the measured current exceeds the motor's nominal current (including the ambient and service factor corrections) but does not exceed the "Max overload current" setting.
High overcurrent	The *High overcurrent* signal is active when the measured current is above the "Max locked rotor current" setting and presents a situation where the motor cannot start or stall. When this signal activates, it indicates a short-circuit fault and should immediately be used to halt start-up or stalled situations.

Events and registers

The motor status monitoring function (abbreviated "MST" in event block names) generates events and registers from the status changes in the events listed below. The user can select which event messages are stored in the main event buffer: ON, OFF, or both. The events triggered by the function are recorded with a time stamp.

The function's output can be used for direct I/O controlling and user logic programming. The function also a resettable cumulative counter for the MOTOR STARTS, MOTOR STARTS SUCCEEDED and TIMES MOTOR STOPPED events.

Table. 4.5.23 - 311. Event messages.

Event block name	Event names
MST1	Motor Starting ON/OFF
MST1	Motor Running ON/OFF
MST1	Motor Stalled ON/OFF
MST1	Load not symm ON/OFF
MST1	Load normal ON/OFF
MST1	Overload ON/OFF
MST1	High Overcurrent ON/OFF

The function registers its operation into the last twelve (12) time-stamped registers. The table below presents the structure of the function's register content.

Table. 4.5.23 - 312. Register content.

Register	Description
Date and time	dd.mm.yyyy hh:mm:ss.mss
Event	Event name

Register	Description
L1 current	Phase L1 current x I_n
L2 current	Phase L2 current x I_n
L3 current	Phase L3 current x I_n
Thermal delta	Detected change in thermal capacity.
Motor load	Motor loading when triggered.

4.5.24 Generator/motor/transformer differential protection (Idb>/Idi>/I0dHV>/I0dLV>; 87T/87G/87M/87N)

The function is used for differential protection of two-winding transformers, motors and generators. Differential protection function is based on calculating the difference between the ingoing and outgoing currents. If the operating status is normal, all power that comes in also goes out. If this is not the case, the transformer has an internal fault and the device should be de-energized as soon as possible to avoid extensive damage to the protected object(s).

Differential protection is very sensitive and it is scaled internally to the loading and fault current flowing through the transformer. For example, an interturn fault in the transformer's windings could go entirely unnoticed by an overcurrent relay while a differential relay could trip it in the very first power cycle. The same goes for internal earth faults: they can be impossible for conventional earth fault protection to notice until the fault causes heavier fault currents (such as when the fault location is close to the neutral side inside the star winding).

Figure. 4.5.24 - 130. Differential protection function can be used for protecting transformers, machines (generators/motors) and both at the same time.

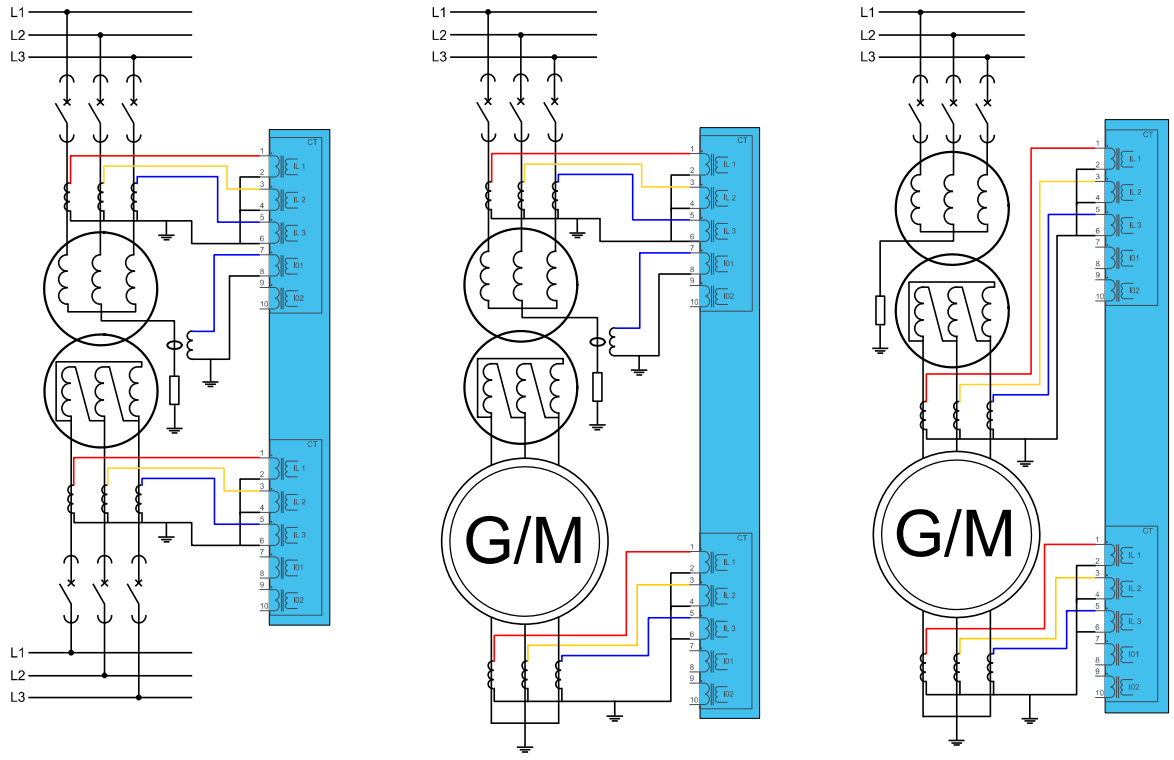

© Arcteq Relays Ltd

Transformer properties and basic concepts for differential protection

Setting the differential protection requires some intial data of the transformer to be known. At minimum, the following data needs to be available:

- the transformer's nominal power
- the nominal voltages of the HV side and the LV side
- the transformer's special properties, such as tap changer and auxiliary windings
- the transformer's vector group (for matching the transformer vectors in p.u.)
- the ratios and properties of the transformers HV and LV sides.

This chapter shows the setting and the principle of transformer differential protection step by step.

Figure. 4.5.24 - 131. Transformer and its components forming the differential zone.

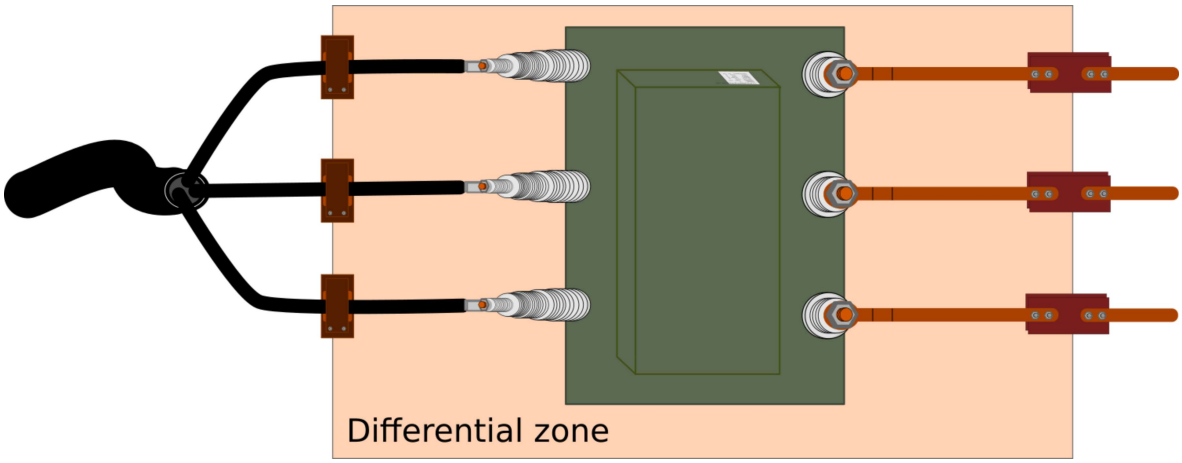

The differential protection area is the area between the current transformers. This is called the differential zone which means that the currents going in from one side must come out from the other side. This is true whether the signal is scaled higher or lower, or whether the phase angle is shifted. Unless both side currents match there is a problem within the protected zone which either blocks or keeps the current inside the zone.

Figure. 4.5.24 - 132. Transformer name plate data.

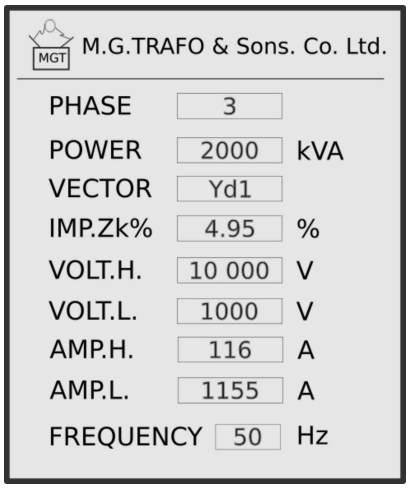

According to the data on this example name plate, this transformer is designed for three-phase usage and has two windings. The nominal power of the transformer is 2 MVA. Its vector group is Yd1: this means that the high-voltage side is connected to the Y and the low-voltage side to the delta, resulting in the LV side having a 30-degree lag in relation to the HV side. Additionally, the HV side's nominal voltage is 10 kV, on the LV side the nominal voltage is 1kV. The transformer's short-circuit impedance is 4.95 %; it is based on the transformer's final test and presents how much short-circuit current the transformer is able to feed. The transformer's frequency is 50 Hz. If the transformer has a tap changer, its information is usually also available in the name plate data.

Nominal current matching is the first thing to consider in differential protection. Modern numerical protection relays can calculate these factors themselves as long as the transformer's nominal power and voltage levels are known. However, if one feels inclined to calculate the amplitude matching factor, they can do so with the formulas presented below.

For this example, let us say we want to do these calculation for the transformer whose name plate we have in the image above. Let us further say the HV side current transformers are 150/5 A and the LV side current transformers are 1200/5 A. The primary side factor (p.u.) and current are then calculated as follows:

$$I_{n,HV} = \frac{S_n}{\sqrt{3} \times U_{HV}} = \frac{2\,000\,000\ \text{VA}}{\sqrt{3} \times 10\,000\ \text{V}} = 115.47\ \text{A}$$

$$I_{pu,pri,HV} = \frac{I_{n,HV}}{CT_{pri,HV}} = \frac{115.47\ \text{A}}{150\ \text{A}} = 0.77$$

$$I_{pu,sec,HV} = I_{pu,pri,HV} \times CT_{sec,HV} = 0.77 \times 5\ \text{A} = 3.85\ \text{A}$$

Then, the secondary side factor (p.u.) and current are calculated as follows:

$$I_{n,LV} = \frac{S_n}{\sqrt{3} \times U_{LV}} = \frac{2\,000\,000\ \text{VA}}{\sqrt{3} \times 1\,000\ \text{V}} = 1154.7\ \text{A}$$

$$I_{pu,pri,LV} = \frac{I_{n,LV}}{CT_{pri,LV}} = \frac{1154.7\ \text{A}}{1200\ \text{A}} = 0.96$$

$$I_{pu,sec,LV} = I_{pu,pri,LV} \times CT_{sec,LV} = 0.96 \times 5\ \text{A} = 4.81\ \text{A}$$

The calculations show that if 2 MVA of power go through the transformer the CT's secondary current on the high-voltage side will be 3.85 A and the CT secondary current on the low-voltage side will be 4.81 A. The differential function uses these values to change them into measured currents in per unit. Therefore, it would show 1.0 · I_n for both HV and LV side measurements, eventhough the measured currents are different. This is called amplitude matching of the HV and LV sides. In modern differential relays this is done automatically when the nominal values and CT ratings are set for the transformer. Thus, these calculations only have nice-to-know informational value.

© Arcteq Relays Ltd

Figure. 4.5.24 - 133. Amplitude scaling to match the nominal currents and CTs in the differential relay.

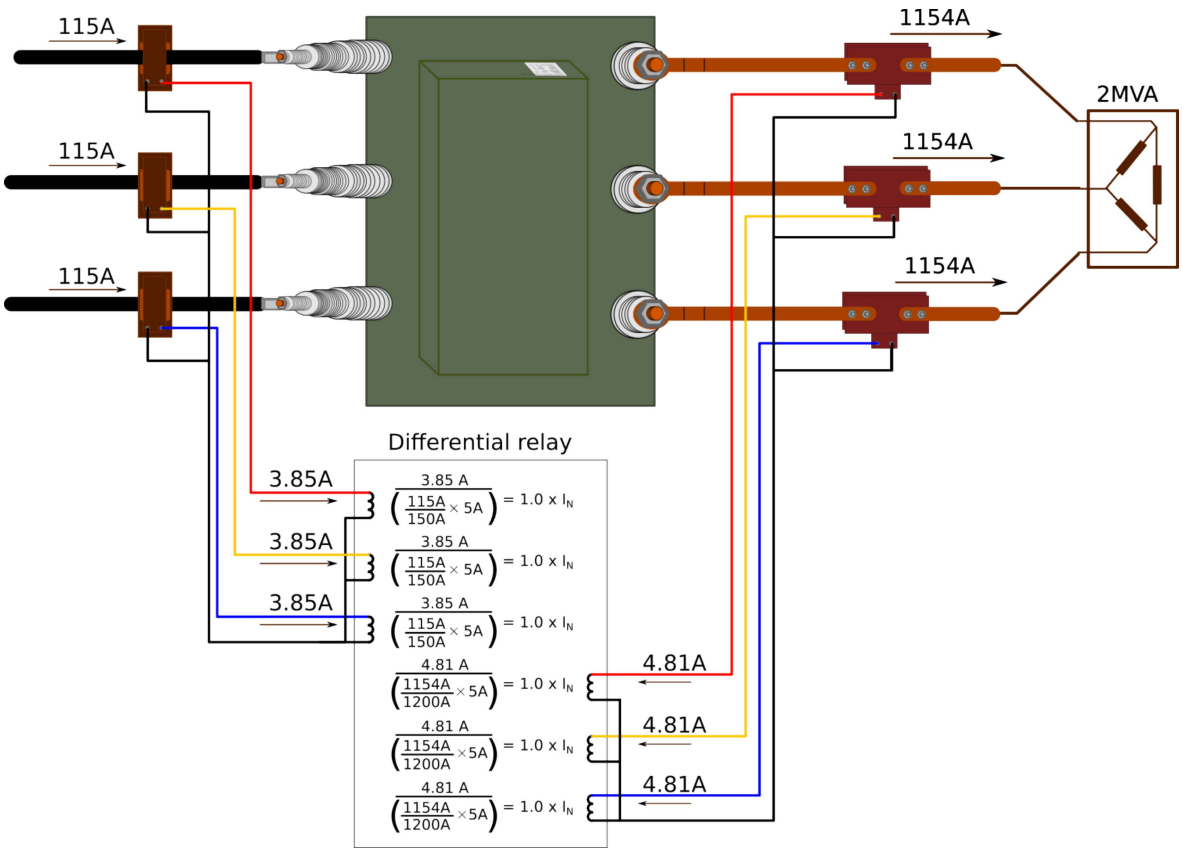

Nominal current matching is only part of the differential protection settings. The vector group of the transformer is also important, since the differential function is interested in the angle difference of the measured current vectors. In this example the transformer's vector group is Yd1, which means that the transformer's HV side is connected to the Y and the LV side to the delta. Therefore, the LV side is in 30-degree lag in relation to the HV side vectors.

The number '1' in the vector group's name comes from the angle in the phase current difference between the HV and the LV side. If one imagines the HV side current's Y placed upside down on the face of a clock (with the Y's leg pointing at 12), the LV side's delta would be pointing at 1. Likewise, '11' means that the LV side is leading 30 degrees; '5' and '7' are just the other ends of the windings thus causing a 180-degree difference between the '1' and '11' clock numbers.

The following example explains transformer current vectors and what a connection might look like.

Figure. 4.5.24 - 134. Yd1 transformer's internal connection (in theory).

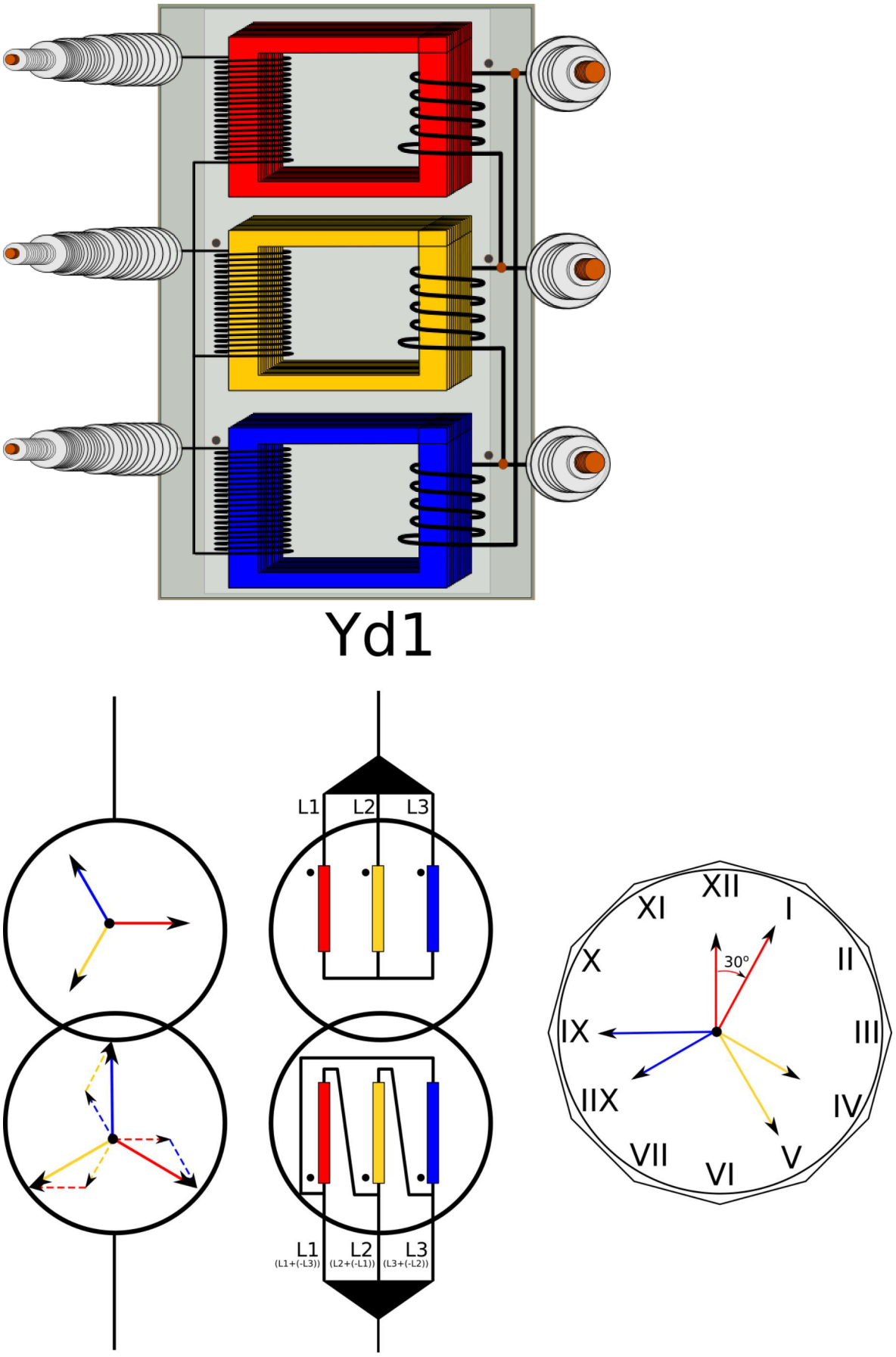

© Arcteq Relays Ltd
IM00099

In modern protection relays these standard vector groups (Y or delta, lead or lag) are defined by a setting selection and there is no need for interposing transformers. Even if the transformer's vector group is not standard it should still be settable within the protection relay (such as with zigzag transformers).

In this example, the function translates the delta side currents. The correction applies not only to the angles but also to the amplitudes because the delta side (in p.u.) is relative to the amplitude difference with the Y-connected side.

$$\overline{IL1DS_{LV}} = \frac{(\overline{IL1_{LV}} - \overline{IL2_{LV}})}{\sqrt{3}}$$

$$\overline{IL2DS_{LV}} = \frac{(\overline{IL2_{LV}} - \overline{IL3_{LV}})}{\sqrt{3}}$$

$$\overline{IL3DS_{LV}} = \frac{(\overline{IL3_{LV}} - \overline{IL1_{LV}})}{\sqrt{3}}$$

This process is called vector group matching for the currents (in p.u.) of the transformer. This matching is necessary whenever one side is connected to the delta and another to the Y. Previously in non-numerical relays, this matching was done by interposing CTs which connected the power transformer's Y side to the delta, and the transformer's delta side to the Y. This got the HV and LV side vectors to match each other. Then the currents in the protection relay inputs are summed up. If there is no difference (as the HV and LV side currents negate each other), the pick-up is not triggered. If the currents do have a difference, the current flows to the protection relay input and with enough difference causes a pick-up and a trip. However, as modern differential relays do this transformation by calculating the corrected vector internally, this is also just nice-to-know information not related to the actual operation of the relay.

In Manual Set mode, the differential protection allows adjustment of the angle offset and a magnitude correction factor. If a winding side is configured as delta, the relay automatically applies the inherent 30° phase shift. This means the user must take that into account when calculating the additional manual angle offset. The magnitude correction is used to scale current magnitude's using the set factor. Phase remapping is not supported in this mode, so connection groups that rely on it (e.g. Yy2) cannot be used.

Figure. 4.5.24 - 135. Expected phase shifts from HV side to LV side (a symmetrical situation).

		Phase angles HV side			Phase angles LV side		
	Shift(deg)	IL1	IL2	IL3	IL1"	IL2"	IL3"
Yy0, Yyn0, YNy0, Dd0	0	0	240	120	0	240	120
Yy6,Yyn6, YNy6, YNyn6, Dd6	180	0	240	120	180	60	300
Yd1, YNd1, Dy1, Dyn1	-30	0	240	120	330	210	90
Yd11, YNd11, Dy11, Dyn11	30	0	240	120	30	270	150
Yd5, YNd5, Dy5, Dyn5	-150	0	240	120	210	90	330
Yd7, YNd7, Dy7, Dyn7	150	0	240	120	150	30	270

The direction of the CTs' Y legs on the HV and LV sides affects how the differential calculation method is set. The "add" mode is used when the CT's starpoints are either pointing towards each other or away from each other. The "subtract" mode is used when those points are pointing in the same direction. In this example above the correct setting would be the "add" mode because the CTs in the main circuit are connected to the opposite and thus the measured currents from the CTs are also opposite. The user selects how they want the signals to be shown: the CTs' currents can be negated with the "subtract" option, resulting in a one Y-connected vector diagram.

The images below present the differential algorithm itself; first the "subtract" formulas, then the "add" formulas.

Figure. 4.5.24 - 136. "Subtract" formula.

$$L1DIFF_{Subt} = |\overline{IL1_{HV}} - \overline{IL1_{LV}}|$$

$$L2DIFF_{Subt} = |\overline{IL2_{HV}} - \overline{IL2_{LV}}|$$

$$L3DIFF_{Subt} = |\overline{IL3_{HV}} - \overline{IL3_{LV}}|$$

Figure. 4.5.24 - 137. "Add" formula.

$$L1DIFF_{Add} = |\overline{IL1_{HV}} + \overline{IL1_{LV}}|$$

$$L2DIFF_{Add} = |\overline{IL2_{HV}} + \overline{IL2_{LV}}|$$

$$L3DIFF_{Add} = |\overline{IL3_{HV}} + \overline{IL3_{LV}}|$$

Figure. 4.5.24 - 138. CTs' starpoints requiring the "Add" mode.

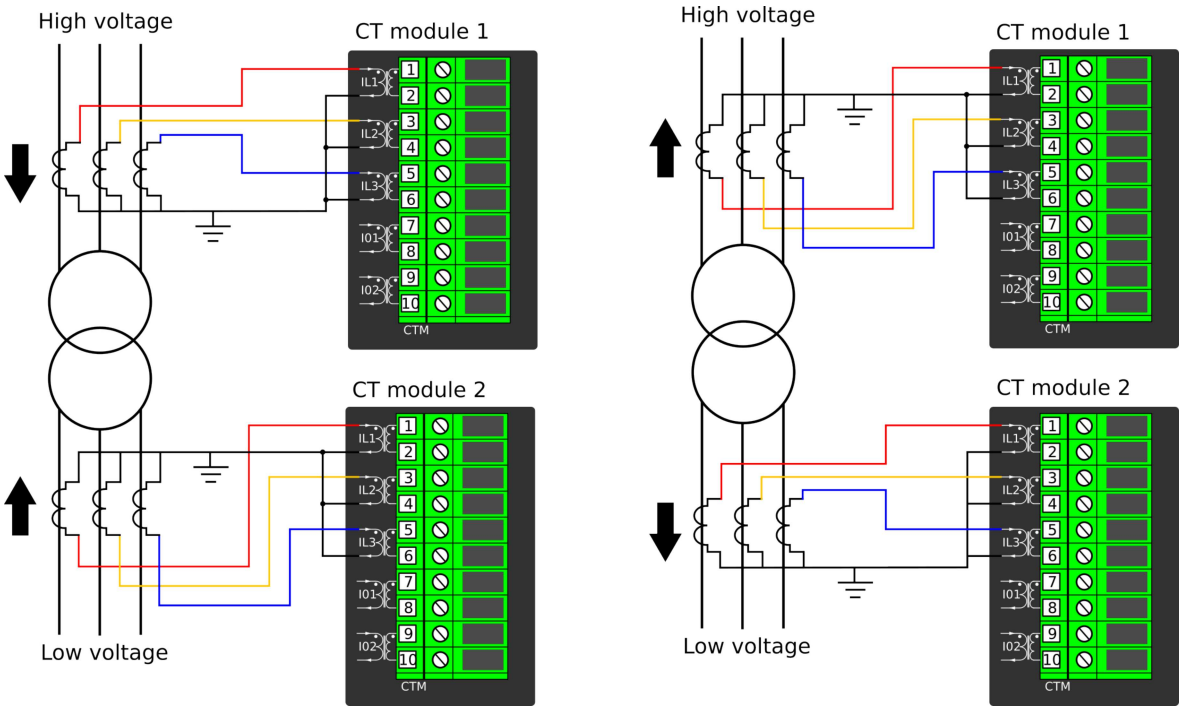

© Arcteq Relays Ltd

Figure. 4.5.24 - 139. CTs' starpoints requiring the "Subtract" mode.

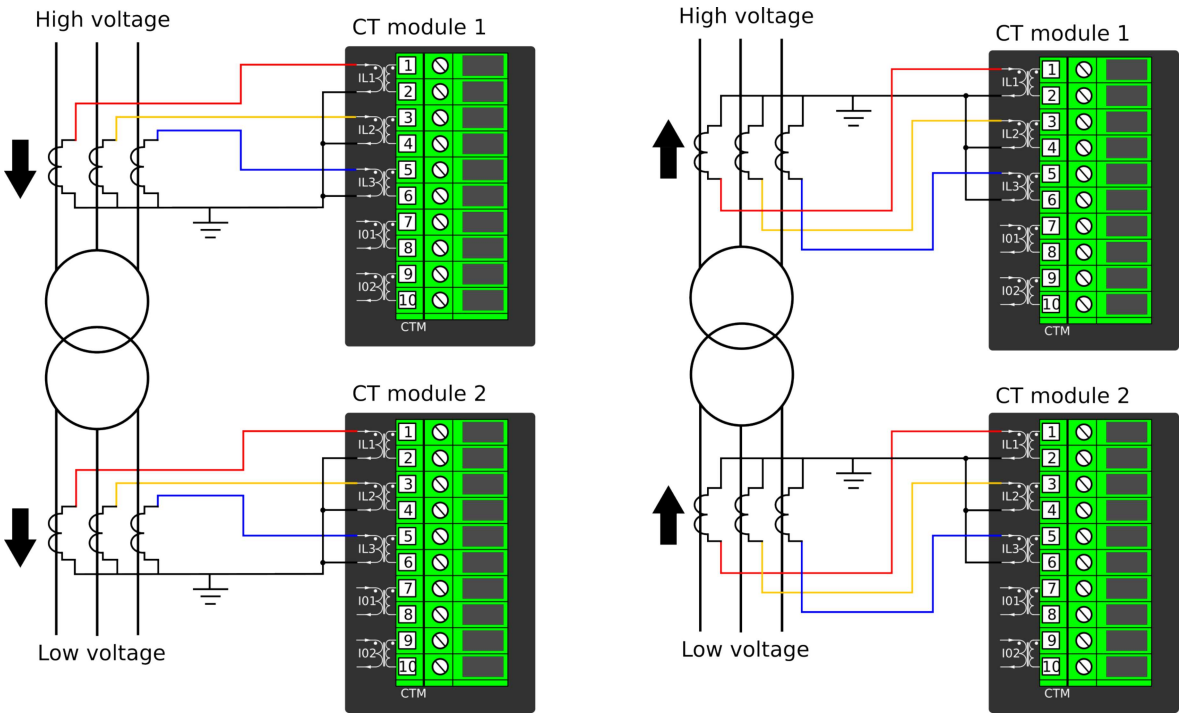

The differential protection function has two separate operating stages:

- Non-restraint stage: This stage utilizes only the above mentioned comparison formulas as its evaluation basis.
- Restraint stage: In this stage, a *bias calculation* is performed for each phase. The purpose of this calculation is to adapt the sensitivity of the differential element to the magnitude of the measured currents, which improves stability under varying load and fault conditions.

Bias calculation can be sensitive or coarse (see the following formulas).

Figure. 4.5.24 - 140. Average mode (sensitive biasing).

$$L1BIAS_{AVG} = \frac{|IL1_{HV}| + |IL1_{LV}|}{2}$$

$$L2BIAS_{AVG} = \frac{|IL2_{HV}| + |IL2_{LV}|}{2}$$

$$L3BIAS_{AVG} = \frac{|IL3_{HV}| + |IL3_{LV}|}{2}$$

Figure. 4.5.24 - 141. Max mode (coarse biasing).

$$L1BIAS_{MAX} = \max\left(|\mathrm{IL1_{HV}}|, |\mathrm{IL1_{LV}}|\right)$$

$$L2BIAS_{MAX} = \max\left(|\mathrm{IL2_{HV}}|, |\mathrm{IL2_{LV}}|\right)$$

$$L3BIAS_{MAX} = \max\left(|\mathrm{IL3_{HV}}|, |\mathrm{IL3_{LV}}|\right)$$

Next, these two formulas (bias and differential calculation) are combined in a graph: the y-axis presents the measured differential current, and the x-axis presents the calculated bias current. The following graph shows the differential function characteristic, both biased and non-biased.

Figure. 4.5.24 - 142. Differential function characteristic, biased and non-biased.

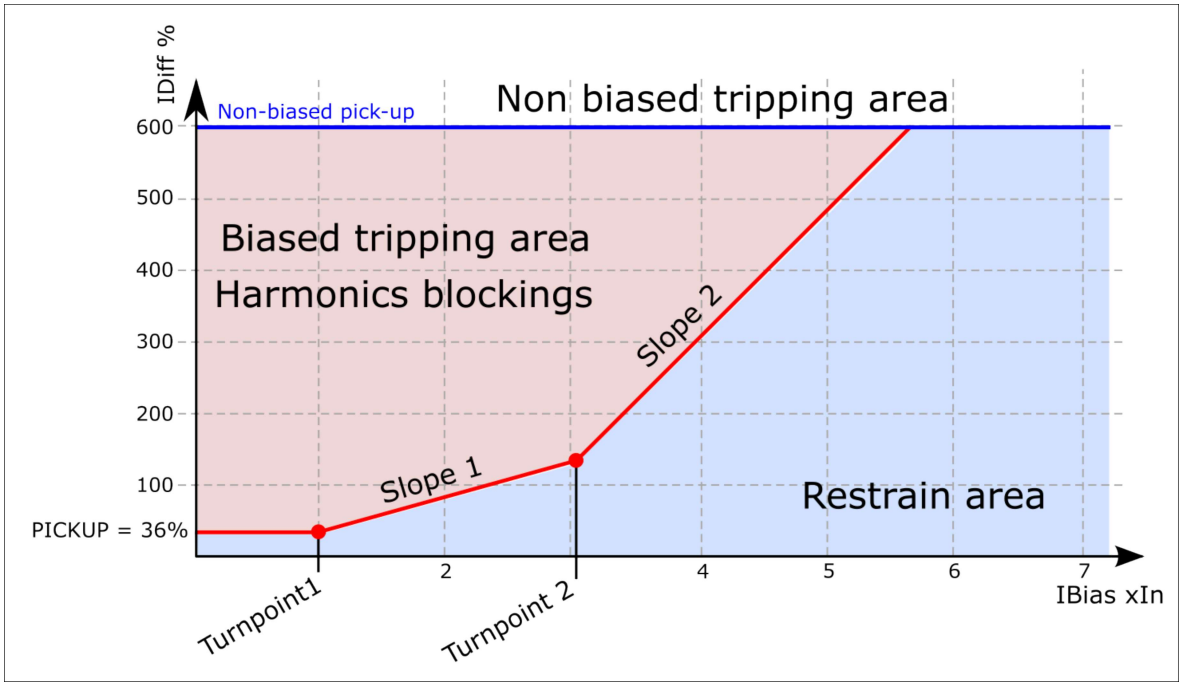

The graph is the function of measured biasing current and the differential protection current. The red line presents the allowed differential current in percentages. In this example the non-biased pick-up is set lower than in a normal transformer application. The settings and the ranges of the differential protection function are presented in the "Settings and signals" section of this topic.

The biasing characteristic is formed with the following formulas:

$$Diff_{bias<TP1} = I_{d>pick-up}$$

$$Diff_{bias\,TP1...TP2} = SL1 \times (Ix - TP1) + I_{d>pick-up}$$

$$Diff_{bias>TP2} = SL2 \times (Ix - TP2) + SL1 \times (TP2 - TP1) + I_{d>pick-up}$$

These form a straight line from zero current to Turnpoint (TP1). From TP1 to TP2 is the first slope (Slope 1) which causes the set biasing to be coarser when the measured current amplitude increases. When the measured current is higher that the TP2 set value, the second slope (Slope 2) is used.

Differential characteristics settings

One needs to understand what the various parts of the characteristics mean in order to set the characteristics for the transformer application.

$Diff_{bias<TP1} = I_{d>pick-up}$

© Arcteq Relays Ltd
IM00099

This is the first straight line which represents the differential current created by the transformer's normal operation. It takes into account measurement errors, possible variations caused by the transformer's tap changer (if available), and the various reasons why the application might have caused a different load inside the protected differential zone. In differential relays this is known as the pick-up current ($I_{d>pick\text{-}up}$). It is the basic sensitivity limit: when the measured differential current is below this limit, the transformer still operates normally and the protection does not trigger. In other words, the pick-up current setting must be higher than the combination of all the normal operation factors that cause differential currents.

Slope 1 settings present the protection relay's restrain characteristics over the transformer's load current range. This slope should be effective up to the maximum transformer loading. This value for power transformers is usually around 1.0 to 2.0 × I_n; for large power transformer a typical value is 1.5 × I_n. The purpose is to compensate the measurement errors caused by a relatively high current, including the tap changer effect.

Slope 2 settings are used for biasing the differential characteristics against heavy faults outside the differential zone that can cause heavy saturation on one or both sides of the CTs causing heavy differential current in the measurements even though the transformer itself does not have a fault.

Calculating the generated differential current — The non-biased settings $I_{di>Pick\text{-}up}$

The purpose of this stage is to ensure fast and selective tripping of faults inside the differential zone, and also to ensure a stable operation on heavy outside faults. This stage operates only on the measured absolute differential current and is not blocked by harmonics or bias restraints. The setting of the stage should be based on the weakest full saturation of the CT under worst-case fault conditions because then only the other side current is measured and all current seen is differential current.

Figure. 4.5.24 - 143. Example differential characteristics

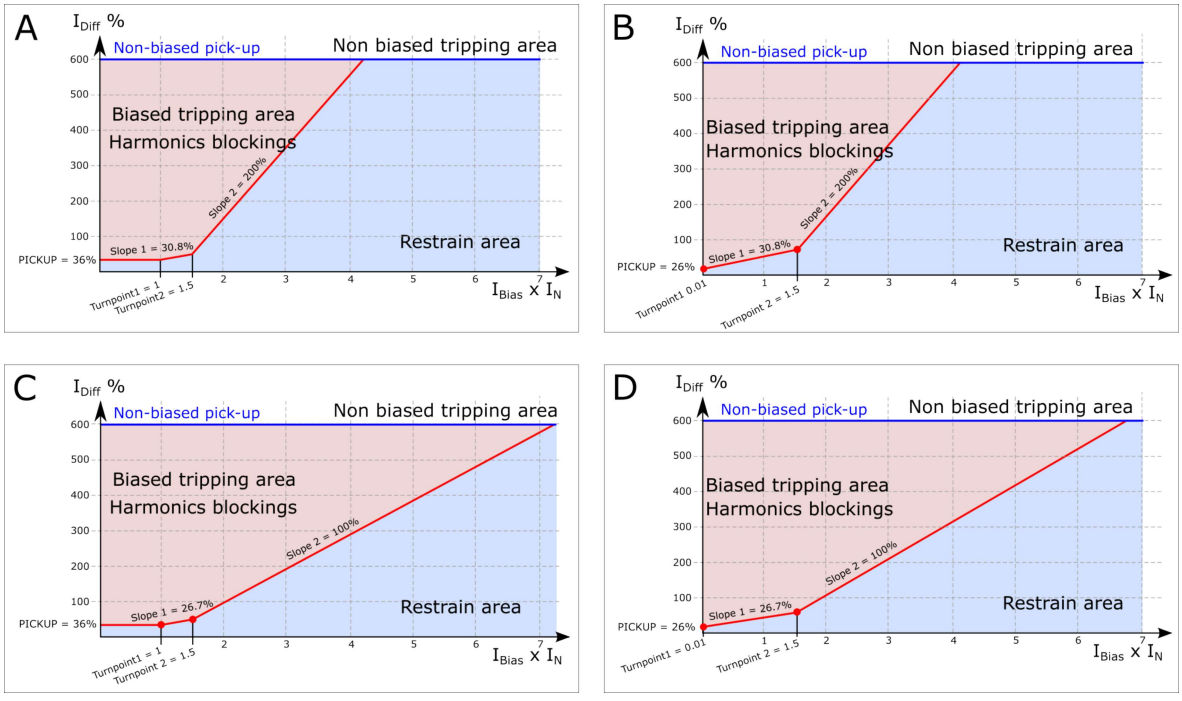

The four characteristics (the image above) present the setting variations based to the Average restraint calculation mode (figures A and B) and the Maximum restraint calculation modes (figures C and D). The characteristics are set to be equally sensitive in each of them. You can also see the variations in Turnpoint 1 settings: in Figures A and C it is set at 1.0 × I_n, whereas in Figures B and D it is set at 0.01 × I_n.

Zero sequence compensation for external earth faults

A very common transformer type is the kind where the star side (HV, LV, or both) is earthed and thus forms a route outside the differential zone (see the image below).

Figure. 4.5.24 - 144. Transformer earthing settings that do not compensate for external earth faults.

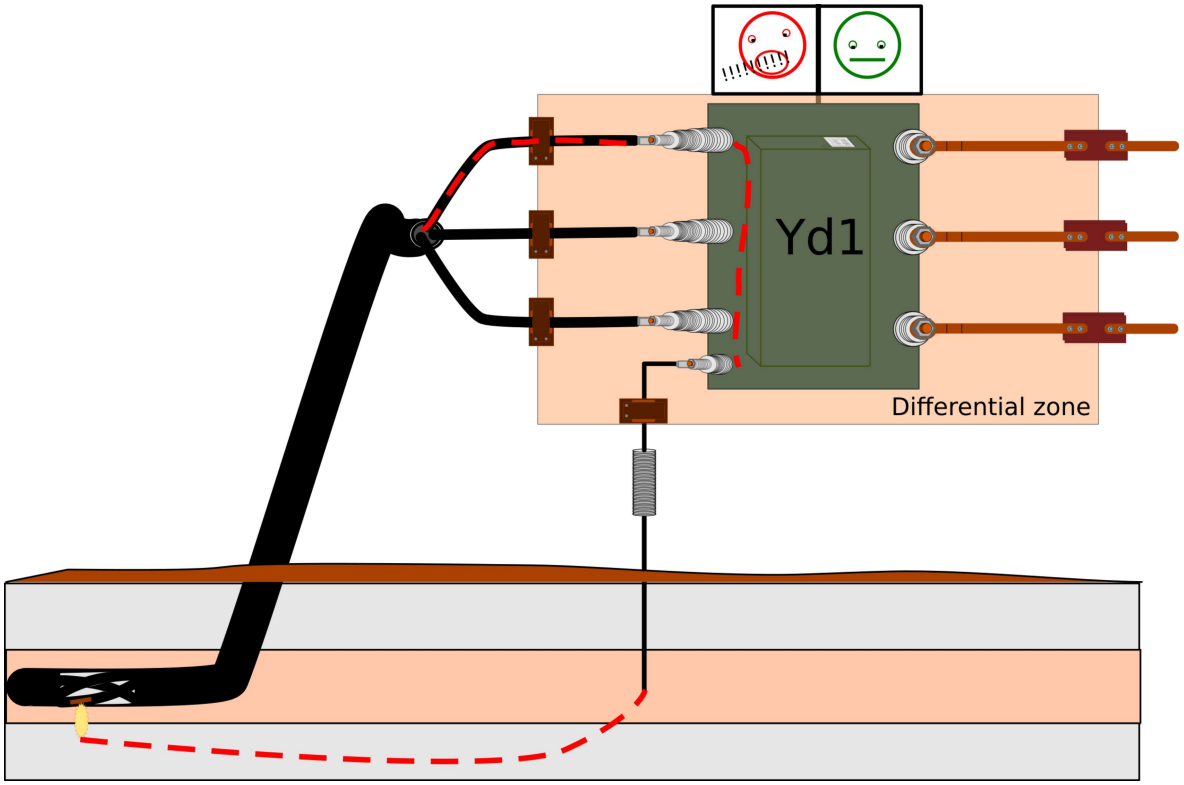

The differential relay looks at this situation and sees a fault inside the differential zone. This is because the other side is not affected at all by the fault (or only very little), and the relay sees a high current entering but not exiting the zone.

In many cases the zero sequence current is monitored by the CT in the earthing.

Earthing (directly or via a resistor) forms a route outside the differential zone.

When an external earth fault happens, only the earthed side of the transformer is involved in the fault.

The differential earthing requires the earthing to be known: if not compensated, any low-impedance earth fault outside the differential zone causes a differential current and possibly trips the differential protection. This is why the calculated zero sequence compensation is used. The vector group selection has either "N" or "n" to signify either HV side or LV side earthing. The selection then deducts the calculated zero sequence current from the currents (in p.u.) before differential calculation and thus negates the effect of an external earth fault. Correctly selected transformer settings prevent the differential function from being tripped by out-of-zone earth faults (see the image below).

© Arcteq Relays Ltd

Figure. 4.5.24 - 145. Transformer earthing settings that compensates for external earth faults.

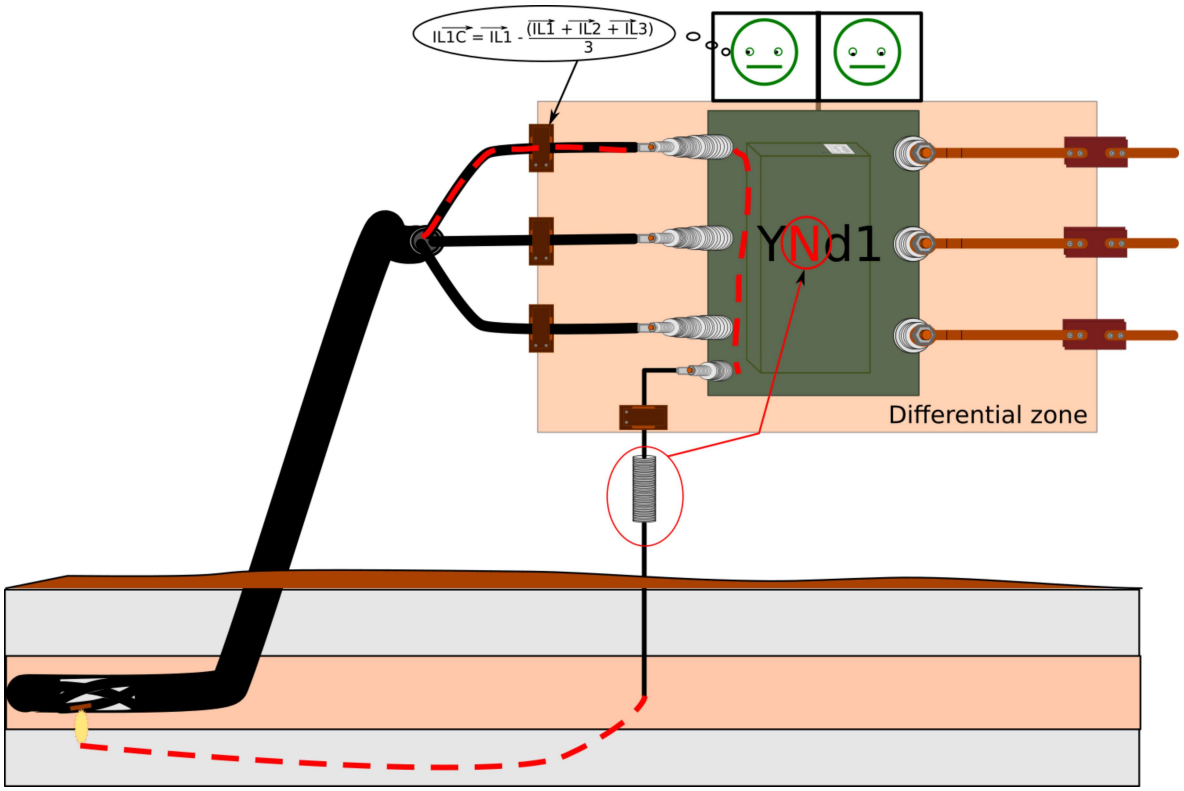

When the transformer settings are correct, the differential relay compensates the zero sequence current and does not trip due to earth faults outside the differential zone.

Earthing (directly or via a resistor) forms a route outside the differential zone.

When an external earth fault happens, only the earthed side of the transformer is involved in the fault.

The "N" or "n" selection applies the correction and eliminates the zero sequence effect with the following formulas:

$$\overrightarrow{IL1}_{corr} = \overrightarrow{IL1} - \frac{\overrightarrow{IL1} + \overrightarrow{IL2} + \overrightarrow{IL3}}{3}$$

$$\overrightarrow{IL2}_{corr} = \overrightarrow{IL2} - \frac{\overrightarrow{IL1} + \overrightarrow{IL2} + \overrightarrow{IL3}}{3}$$

$$\overrightarrow{IL3}_{corr} = \overrightarrow{IL3} - \frac{\overrightarrow{IL1} + \overrightarrow{IL2} + \overrightarrow{IL3}}{3}$$

Note! When you enable the zero sequence compensation by selecting the "N" or "n" in the transformer vector group, the sensitivity to single-phase one end fault decreases by a third simultaneously. This is why restricted earth fault protection (I0>, REF) should be enabled for the side where the zero sequence is compensated. However, enabling the REF protection requires that both the phase current measurements and the starpoint current are available and can be connected to the relay's residual current channel on the corresponding (HV/LV) side measurement.

Restricted earth fault

When the transformer's earthed side is compensated with afore-mentioned zero sequence compensation, that side will be a third (appr. 33 %) less sensitive in detecting single-phase faults inside the differential zone. For this reason it is advised that the restricted earth fault (REF) stage is activated on the transformer side that compensates the zero sequence current. Additionally, it should be enabled whenever the Y side of the starpoint is earthed; normal phase differential protection cannot be set to provide the maximum sensitivity to detect single-phase (earth) faults within the differential are because the properties dependant on the transformer and the application that were described in the previous section. This differential stage monitors the incoming calculated residual current and compares it to the outgoing starpoint current. If the single-phase (earth) fault occurs outside the differential zone, this function does not operate; if the fault occurs inside the differential zone, this function operates quickly. This protection's sensitivity to earth faults only within the protection zone is referred to as the "restricted earth fault protection".

The transformer differential functions offers two stages of low-impedance, restricted earth fault protection.

The operating characters of the restricted earth fault function (I0d>) on both the high voltage and the low voltage side are more similar to each other than to the percentage characteristics presented by the Idb> function, even though both sides are independent and can be set freely. The calculation of differential and biasing currents on both sides is as follows (the HV side on the left, the LV side on the right).

$HV_{I0d\ bias\ avg} = \frac{\lvert(\overrightarrow{IL1}_{HV} + \overrightarrow{IL2}_{HV} + \overrightarrow{IL3}_{HV}) + \overrightarrow{I0}_{HV\ meas}\rvert}{2}$	$LV_{I0d\ bias\ avg} = \frac{\lvert(\overrightarrow{IL1}_{LV} + \overrightarrow{IL2}_{LV} + \overrightarrow{IL3}_{LV}) + \overrightarrow{I0}_{LV\ meas}\rvert}{2}$
$HV_{I0d\ bias\ max} = \max((\overrightarrow{IL1}_{HV} + \overrightarrow{IL2}_{HV} + \overrightarrow{IL3}_{HV}), \overrightarrow{I0}_{HV\ meas})$	$LV_{I0d\ bias\ max} = \max((\overrightarrow{IL1}_{LV} + \overrightarrow{IL2}_{LV} + \overrightarrow{IL3}_{LV}), \overrightarrow{I0}_{LV\ meas})$
$HV_{I0d>\ diff\ add} = \lvert(\overrightarrow{IL1}_{HV} + \overrightarrow{IL2}_{HV} + \overrightarrow{IL3}_{HV}) + \overrightarrow{I0}_{HV\ meas}\rvert$	$LV_{I0d>\ diff\ add} = \lvert(\overrightarrow{IL1}_{LV} + \overrightarrow{IL2}_{LV} + \overrightarrow{IL3}_{LV}) + \overrightarrow{I0}_{LV\ meas}\rvert$
$HV_{I0d>\ diff\ substract} = \lvert(\overrightarrow{IL1}_{HV} + \overrightarrow{IL2}_{HV} + \overrightarrow{IL3}_{HV}) - \overrightarrow{I0}_{HV\ meas}\rvert$	$LV_{I0d>\ diff\ subtract} = \lvert(\overrightarrow{IL1}_{LV} + \overrightarrow{IL2}_{LV} + \overrightarrow{IL3}_{LV}) - \overrightarrow{I0}_{LV\ meas}\rvert$

Similarly to the phase differential stages, both sides with the restricted earth fault stages have options between the average and the maximum bias current calculation, as well as the option between the add and the subtract current calculation. The use of these stages depends on the CTs' installation directions and the desired sensitivity for bias calculation.

In the transformer differential stage the reference current for the REF protection is always the protected side nominal current, which is calculated in the relay's Transformer status monitoring (TRF) module.

Blockings from harmonics (2nd and 5th)

In transformer protection harmonics are always present in energizing situations: they are generated by the high current in the transformer inductances when the coils are energized. They are also preent in the currents during overfluxing and overvoltage situations. Energizing situations generate even harmonics: the 2nd harmonic is the most commonly used harmonic in inrush blocking. Overvoltage (and overexcitation) situations generate odd harmonics: the 5th harmonic is mainly used for blocking (the 3rd harmonic is also present in Y windings but absent in delta windings which is why the 5th harmonic has been chosen for overfluxing and excitation detection). In this chapter 'blocking' refers to the Idb> (the biased differential) stage and it has both these blocking (2nd and 5th) applied internally. If the Idi> stage (the non-biased differential) needs to be blocked, external blocking must be used.

© Arcteq Relays Ltd

Differential function details

The transformer differential function outputs TRIP and BLOCKED signals from the biased and non-biased functions as well as the 2nd and 5th harmonic block activation signals. These signals can be used in protection applications.

Settings and signals

The settings of the differential function are a combination of transformer monitor and differential stage function settings. The following table shows the function's settings, including the general settings (in p.u.) used for pre-calculations.

Table. 4.5.24 - 313. Settings related to the differential function's pre-calculation.

Name	Range	Step	Default	Function	Description
Idx> LN mode	• On • Blocked • Test • Test/ Blocked • Off	-	On	-	Set mode of DIF block. This parameter is visible only when *Allow setting of individual LN mode* is enabled in *General* menu.
Idx> force status to	• Normal • Idb Blocked • Idb Trip • Idi Blocked • Idi Trip • H2block On • H5block On • HV I0d> Block On • HV I0d> Trip On • LV I0d> Block On • LV I0d> Trip On	-	Normal	-	Force the status of the function. Visible only when *Enable stage forcing* parameter is enabled in *General* menu.
Idx> LN behaviour	• On • Blocked • Test • Test/ Blocked • Off	-	-	-	Displays the mode of DIF block. This parameter is visible only when *Allow setting of individual LN mode* is enabled in *General* menu.
Transformer nominal	0.1...500.0MVA	0.1MVA	1.0MVA	All	The nominal MVA of the transformer. This value is used to calculate the nominal currents onf both the HV and the LV side.
HV side nominal voltage	0.1…500.0kV	0.1kV	110.0kV	All	The HV side nominal voltage of the transformer. This value is used to calculate the nominal currents of the HV side.

Name	Range	Step	Default	Function	Description
LV side nominal voltage	0.1…500.0kV	0.1kV	110.0kV	All	The LV side nominal voltage of the transformer. This value is used to calculate the nominal currents of the LV side.
Transformer Zk%	0.01…25.00%	0.01%	3.00%	Info	The transformer's short-circuit impedance in percentages. Used for calculating short-circuit current.
Transformer nom. freq.	10…75Hz	1Hz	50Hz	Info	The transformer's nominal frequency. Used for calculating the transformer's nominal short-circuit inductance.
Transf. vect. group	• Manual • Yy0 • Yyn0 • YNy0 • YNyn0 • Yy6 • Yyn6 • YNy6 • YNyn6 • Yd1 • YNd1 • Yd7 • YNd7 • Yd11 • YNd11 • Yd5 • YNd5 • Dy1 • Dyn1 • Dy7 • Dyn7 • Dy11 • Dyn11 • Dy5 • Dyn5 • Dd0 • Dd6	-	Yy0	- transformer status monitoring - transformer differential	The selection of the transformer's vector group. The selection values (1–26) are predefined so that the scaling and vector matching are applied in the relay automatically when the correct vector group is selected. The predefinitions assume that the HV side is connected to the CT1 module and that the LV side is connected to the CT2 module. If the protected transformer vector group is not found in the predefined list, it can be manually set by selecting the option "Manual set".
HV side Star or Zigzag/ Delta	• Star/Zigzag • Delta	-	Star/ Zigzag	- transformer status monitoring - transformer differential	The selection of the HV side connection. Can be selected between star or zigzag and delta. This selection is visible only if the option "Manual set" is selected for the vector group setting.
HV side grounded	• Not grounded • Grounded	-	Not grounded	- transformer status monitoring - transformer differential	The selection of whether or not the zero sequence compensation is applied in the HV side current calculation. The selection is visible only if the option "Manual set" is selected for the vector group setting.
HV side lead or lag LV	• Lead • Lag	-	Lead	- transformer status monitoring - transformer differential	The selection of whether the HV side leads or lags the LV side. The selection is visible only if the option "Manual set" is selected for the vector group setting.

© Arcteq Relays Ltd

Name	Range	Step	Default	Function	Description
LV side Star/ Zigzag or Delta	• Star/Zigzag • Delta	-	Star/ Zigzag	- transformer status monitoring - transformer differential	The selection of the LV side connection. Can be selected between star or zigzag and delta. This selection is visible only if the option "Manual set" is selected for the vector group setting.
LV side grounded	• Not grounded • Grounded	-	Not grounded	- transformer status monitoring - transformer differential	The selection of whether or not the zero sequence compensation is applied in the LV side current calculation. The selection is visible only if the option "Manual set" is selected for the vector group setting.
LV side lead or lag HV	• Lead • Lag	-	Lead	- transformer status monitoring - transformer differential	The selection of whether the LV side leads or lags the HV side. The selection is visible only if the option "Manual set" is selected for the vector group setting.
HV-LV side phase angle	0.0...360.00deg	0.1deg	0.0deg	- transformer status monitoring - transformer differential	The angle correction factor for HV/LV sides, looked from the HV side. The setting is visible only if the option "Manual set" is selected for the vector group setting.
HV-LV side mag correction	0.0...100.0×I_n	0.1×I_n	1.0×I_n	- transformer status monitoring - transformer differential	The magnitude correction for the HV-LV side currents (in p.u.), if the currents are not directly matched through the calculations of the nominal values. The selection is visible only if the option "Manual set" for the vector group setting.
Check online HV-LV configuration	• - • Check	-	-	- transformer status monitoring - transformer differential	The selection of whether or not the function checks the current going through the transformer and then compares it to the settings. For this to work, the transformer needs to have a current flowing on both sides and "see" no faults. The selection is visible only if the option "Manual set" is selected for the vector group setting.
Enable I0d> (REF) HV side	• Disabled • Enabled	-	Disabled	- transformer status monitoring - transformer differential	The selection of whether the restricted earth fault stage on the HV side is enabled or disabled.
HV side starpoint meas.	• I_{01} • I_{02}	-	I_{01}	- transformer status monitoring - transformer differential	The selection of the starpoint measurement channel for the restricted earth fault protection on the HV side. This setting is only visible if the option "Enabled" is selected for the "Enable I0d> (REF) HV side" setting.
Enable I0d> (REF) LV side	• Disabled • Enabled	-	Disabled	- transformer status monitoring - transformer differential	The selection of whether the restricted earth fault stage on the LV side is enabled or disabled.

Name	Range	Step	Default	Function	Description
LV side starpint meas.	• I_{01} • I_{02}	-	I_{01}	- transformer status monitoring - transformer differential	The selection of the starpoint measurement channel for the restricted earth fault protection on the LV side. This setting is only visible if the option "Enabled" is selected for the "Enable I0d> (REF) LV side" setting.

Setting group selection controls the operating characteristics of the function, i.e. the user or user-defined logic can change function parameters while the function is running.

Table. 4.5.24 - 314. Settings for the operating characteristics.

Name	Range	Step	Default	Description
Differential calculation mode	• Add • Subtract	-	Subtract	The calculation mode of the differential current. The mode selection depends on the CTs' installation direction and the desired current directions. If the current flow on both sides is in the same direction, the differential current is subtracted. If the current flows are in the opposite directions, the differential current is added.
Bias calculation mode	• Average • Maximum	-	Average	The calculation mode of the biasing current. With the average mode the operation may be set to be more sensitive. With the maximum mode the bias is always higher and thus provides a more stable operation.
Idb> Pick-up	0.01…100.00%	0.01%	10.00%	The base sensitivity for the differential characteristics.
Turnpoint 1	0.01…50.00×I_n	0.01×I_n	1.00×I_n	Turnpoint 1 for the differential characteristics.
Slope 1	0.01…250.00%	0.01%	10.00%	Slope 1 for the differential characteristics.
Turnpoint 2	0.01…50.00×I_n	0.01×I_n	3.00×I_n	Turnpoint 2 for the differential characteristics.
Slope 2	0.01…250.00%	0.01%	200.00%	Slope 2 of the differential characteristics-
Enable harmonic blocking	• No harmonic blocking • 2nd harmonic blocking • 5th harmonic blocking • 2nd and 5th harmonic blocking	-	2nd harmonic blocking	The selection of the internal blockings to be used for the detection of transformer normal operations that cause differential currents.
2nd harmonic blocking pick-up	0.01…50.00%	0.01%	15.00%	The pick-up detection for the 2nd harmonic blocking stage. This setting is only visible if the "Enable harmonic blocking" setting is set to "2nd harm" or "2nd and 5th harm".

© Arcteq Relays Ltd

Name	Range	Step	Default	Description
5th harmonic blocking pick-up	0.01…50.00%	0.01%	35.00%	The pick-up detection for the 5th harmonic blocking stage. This setting is only visible if the "Enable harmonic blocking" setting is set to "5th harm" or "2nd and 5th harm".
2nd harmonic maximum uptime	0.000…10.000 s	0.010 s	0.000 s	Determines the maximum time the detection of 2nd harmonic can block the operation of the function. Not in use when set to zero.
5th harmonic maximum uptime	0.000…10.000 s	0.010 s	0.000 s	Determines the maximum time the detection of 5th harmonic can block the operation of the function. Not in use when set to zero.
Enable Idi> stage	• Disabled • Enabled	-	Enabled	The selection of whether the non-biased and the non-blocked differential stage is enabled or disabled.
Idi> Non-biased pick-up	200.00…1500.00%	0.01%	600.00%	The pick-up setting for the non-biased and non-blocked differential stage. This setting is only visible if the "Enable Idi> stage" is disabled.
HV I0d> Pick-up	0.01…100.00%	0.01%	10.00%	The base sensitivity for the HV side restricted earth fault differential characteristics. This setting is only visible if the "Enable I0d> (REF) HV side" setting is enabled.
HV I0d> Turnpoint 1	0.01…50.00×I_n	0.01×I_n	1.00×I_n	Turnpoint 1 for the HV side restricted earth fault differential characteristics. This setting is only visible if the "Enable I0d> (REF) HV side" setting is enabled.
HV I0d> Slope 1	0.01…250.00%	0.01%	10.00%	Slope 1 of the HV side restricted earth fault differential characteristics. This setting is only visible if the "Enable I0d> (REF) HV side" setting is enabled.
HV I0d> Turnpoint 2	0.01…50.00×I_n	0.01×I_n	3.00×I_n	Turnpoint 2 for the HV side restricted earth fault differential characteristics. This setting is only visible if the "Enable I0d> (REF) HV side" setting is enabled.
HV I0d> Slope 2	0.01…250.00%	0.01%	200.00%	Slope 2 of the HV side restricted earth fault differential characteristics. This setting is only visible if the "Enable I0d> (REF) HV side" setting is enabled.
LV I0d> Pick-up	0.01…100.00%	0.01%	10.00%	The base sensitivity for the LV side restricted earth fault differential characteristics. This setting is only visible if the "Enable I0d> (REF) LV side" setting is enabled.
LV I0d> Turnpoint 1	0.01…50.00×I_n	0.01×I_n	1.00×I_n	Turnpoint 1 for the LV side restricted earth fault differential characteristics. This setting is only visible if the "Enable I0d> (REF) LV side" setting is enabled.
LV I0d> Slope 1	0.01…250.00%	0.01%	10.00%	Slope 1 of the LV side restricted earth fault differential characteristics. This setting is only visible if the "Enable I0d> (REF) LV side" setting is enabled.
LV I0d> Turnpoint2	0.01…50.00×I_n	0.01×I_n	3.00×I_n	Turnpoint 2 for the LV side restricted earth fault differential characteristics. This setting is only visible if the "Enable I0d> (REF) LV side" setting is enabled.
LV I0d> Slope 2	0.01…250.00%	0.01%	200.00%	Slope 2 of the LV side restricted earth fault differential characteristics. This setting is only visible if the "Enable I0d> (REF) LV side" setting is enabled.

Table. 4.5.24 - 315. Calculations of the transformer differential function.

Name	Description
L1Bias	The calculated phase L1 bias current
L2Bias	The calculated phase L2 bias current
L3Bias	The calculated phase L3 bias current
L1Diff	The calculated phase L1 differential current
L2Diff	The calculated phase L2 differential current
L3Diff	The calculated phase L3 differential current
L1Char	The calculated phase L1 maximum differential current allowed with current bias level
L2Char	The calculated phase L1 maximum differential current allowed with current bias level
L3Char	The calculated phase L1 maximum differential current allowed with current bias level
HV I0d> Bias current	The calculated HV side restricted earth fault bias current
HV I0d> Diff current	The calculated HV side restricted earth fault differential current
HV I0d> Char current	The calculated HV side restricted earth fault differential current allowed with current bias level
LV I0d> Bias current	The calculated LV side restricted earth fault bias current
LV I0d> Diff current	The calculated LV side restricted earth fault differential current
LV I0d> Char current	The calculated LV side restricted earth fault differential current allowed with current bias level

Table. 4.5.24 - 316. Output signals of the transformer differential function.

Name	Description
Idb> Bias Trip	The TRIP output signal from the biased differential stage
Idi> Nobias Trip	The TRIP output signal from the non-biased and non-blocked differential stage
Idb> Bias Blocked	The BLOCKED output from the biased differential stage (external blocking)
Idi> Bias Blocked	The BLOCKED output from the non-biased and non-blocked differential stage (external blocking)
Idb> 2nd harm block on	The output of the 2nd harmonic activation signal
Idb> 5th harm block on	The output of the 5th harmonic activation signal
HV I0d> Trip	The TRIP output signal from the biased restricted earth fault differential stage on the HV side
HV I0d> Trip	The BLOCKED output signal from the biased restricted earth fault differential stage on the HV side

© Arcteq Relays Ltd

Name	Description
LV I0d> Trip	The TRIP output signal from the biased restricted earth fault differential stage on the LV side
LV I0d> Trip	The BLOCKED output signal from the biased restricted earth fault differential stage on the LV side

Function blocking

The blocking signal is evaluated at the start of each program cycle. The blocking signals are connected to the function's dedicated input, which can be configured in the *IO → Blocking Input Control* tab of the function.

- When the pick-up element activates and the blocking signal is not active, a TRIP signal is generated.
- When the pick-up element activates and the blocking signal is active, a BLOCKED signal is generated, and the function does not process the event further.

The blocking signal needs to reach the device minimum of 5 ms before the set operating delay has passed in order for the blocking to activate in time.

Events and registers

The transformer differential function (abbreviated "DIF" in event block names) generates events from the status changes in the events listed below. The user can select which event messages are stored in the main event buffer: ON, OFF, or both. The events triggered by the function are recorded with a time stamp.

The function's outputs can be used for direct I/O controlling and user logic programming. The function also provides a resettable cumulative counter for the TRIP, 2nd Harmonic Block, 5th Harmonic Block, External Block events.

Table. 4.5.24 - 317. Event messages.

Event block name	Event names
DIF1	Idb> Trip ON/OFF
DIF1	Idb> Blocked (ext) ON/OFF
DIF1	Idi> Trip ON/OFF
DIF1	Idi> Blocked (ext) ON/OFF
DIF1	2nd Harmonic Block ON/OFF
DIF1	5th Harmonic Block ON/OFF
DIF1	L1 2nd harmonic ON/OFF
DIF1	L2 2nd harmonic ON/OFF
DIF1	L3 2nd harmonic ON/OFF
DIF1	L1 5th harmonic ON/OFF

Event block name	Event names
DIF1	L2 5th harmonic ON/OFF
DIF1	L3 5th harmonic ON/OFF
DIF1	HV I0d> Block ON/OFF
DIF1	HV I0d> Trip ON/OFF
DIF1	LV I0d> Block ON/OFF
DIF1	LV I0d> Trip ON/OFF

The function registers its operation into the last twelve (12) time-stamped registers. The table below presents the structure of the function's register content.

Table. 4.5.24 - 318. Register content.

Name	Description
Date and time	dd.mm.yyyy hh:mm:ss.mss
Event	Event name
L1 bias current	Phase L1 bias current
L1 diff. current	Phase L1 maximum differential current
L1 char. current	Phase L1 maximum differential current with bias
L2 bias current	Phase L2 bias current
L2 diff. current	Phase L2 maximum differential current
L2 char. current	Phase L2 maximum differential current with bias
L3 bias current	Phase L3 bias current
L3 diff. current	Phase L3 maximum differential current
L3 char. current	Phase L3 maximum differential current with bias
HV I0d> bias current	HV side REF bias current
HV I0d> differential current	HV side REF differential current
HV I0d> characteristics current	HV side REF maximum differential current with bias
LV I0d> bias current	LV side REF bias current
LV I0d> differential current	LV side REF differential current
LV I0d> characteristics current	LV side REF maximum differential current with bias
Setting group in use	Setting group in use
Ftype	Detected fault type (faulty phases)

© Arcteq Relays Ltd

4.5.25 100 % stator earth fault protection (U03rd<; 64S)

When using conventional neutral overvoltage protection function (U0>; 59N) even in the best case scenario at least 5 % of the stator remains outside the function's range. The 100 % stator earth fault protection function (also known as neutral 3rd harmonic overvoltage protection) is used to detect earth faults near the neutral point. When an Earth fault occurs near the neutral point, it does not produce enough neutral voltage for a conventional neutral overvoltage protection to detect the fault. Generators induce some of the 3rd harmonic neutral voltage; when there is an earth fault near the neutral point, this function detects the drop in the 3rd harmonic neutral voltage and trips the breaker. If the 3rd harmonic neutral voltage induced by the generator is high enough, the whole stator can be protected by combining the neutral overvoltage and the 100 % stator earth fault protection functions.

The figure below demonstrates the overlapping range of the neutral overvoltage and the 100 % stator earth fault protection function.

Figure. 4.5.25 - 146. Overlapping demonstration.

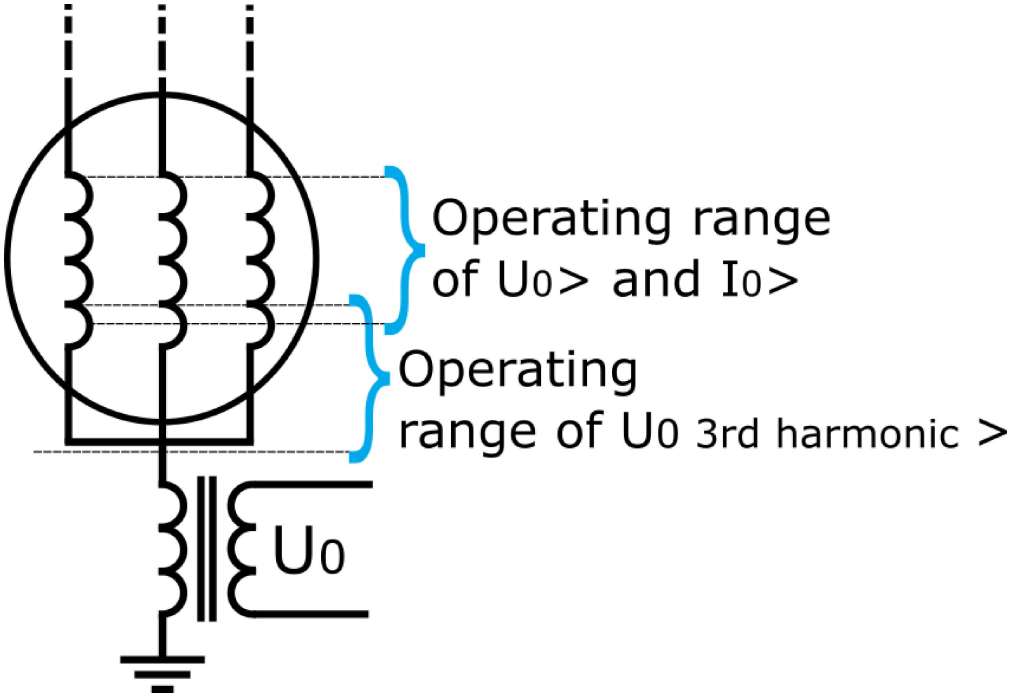

Measured input

The function block uses 3rd harmonic voltage value of the user selected voltage channel. The function uses fundamental frequency component of phase currents to calculated positive sequence current.

Table. 4.5.25 - 319. Measurement inputs of the U03rd> function.

Signal	Description
3rd harmonic neutral voltage (U3)	3rd harmonic of U_3 voltage channel
3rd harmonic neutral voltage (U4)	3rd harmonic of U_4 voltage channel
I_{L1}RMS	Fundamental frequency component of phase L1 (A) current measurement
I_{L2}RMS	Fundamental frequency component of phase L2 (B) current measurement

Signal	Description
I_{L3}RMS	Fundamental frequency component of phase L3 (C) current measurement

General settings

The following general settings define the general behavior of the function. These settings are static i.e. it is not possible to change them by editing the setting group.

Table. 4.5.25 - 320. General settings of the function.

Name	Range	Default	Description
U03rd> LN mode	• On • Blocked • Test • Test/ Blocked • Off	On	Set mode of SEF block. This parameter is visible only when *Allow setting of individual LN mode* is enabled in *General* menu.
U03rd< force status to	• Normal • Start • Trip • Blocked	Normal	Force the status of the function. Visible only when *Enable stage forcing* parameter is enabled in *General* menu.

Pick-up settings

The function has an inbuilt low-current blocking feature to prevent faulty trips. It is set by the *Low current blocking I1< set* parameter. If this parameter is set above zero (0), the measured positive sequence current must be above the set limit for the function to trip.

The *Pick-up setting U03h< set* setting parameter controls the pick-up of the 100 % stator earth fault protection function. This defines the minimum allowed measured neutral 3rd harmonic voltage before action from the function. The function constantly calculates the ratio between the U_{set}< and the measured magnitude. The reset ratio of 103 % is built into the function and is always relative to the U_{set}< value.

Setting group selection controls the operating characteristics of the function, i.e. the user or user-defined logic can change function parameters while the function is running.

Table. 4.5.25 - 321. Pick-up settings.

Name	Range	Step	Default	Description
$U_{0\ 3rd}$ meas input select	• U3 input • U4 input • Select	-	Select	Voltage input must be selected if both U3 and U4 have been set to "U0" mode.
Uset<	1.00…100.00%U_n	0.01%U_n	20%U_n	Pick-up setting
I1< block	0.00…100.00xI_n	0.01xI_n	0%U_n	If the measured positive sequence current is below this value, tripping is not allowed. 0 x I_n setting disables block.

© Arcteq Relays Ltd

Read-only parameters

The function's *Info* page displays useful, real-time information on the state of the protection function. It is accessed either through the device's HMI display, or through the setting tool software when it is connected to the device and its Live Edit mode is active.

Table. 4.5.25 - 322. Information displayed by the function.

Name	Range	Step	Description
$U_{0\ 3rd}<$ LN behaviour	• On • Blocked • Test • Test/Blocked • Off	-	Displays the mode of SEF block. This parameter is visible only when *Allow setting of individual LN mode* is enabled in *General* menu.
$U_{0\ 3rd}<$ condition	• Normal • Start • Trip • Blocked	-	Displays the status of the protection function.
$U_{0\ 3rd}<$ measuring now	• No U0 avail! • U3 input • U4 input	-	Displays used voltage measurement channel. If both U3 and U4 channels have been set to "U0" mode the used input channel must be selected with "$U_{03rd}<$ meas input select" parameter.
$U_{03rd}<$ pick-up setting	0.0...1 000 000V	0.1V	Displays the pick-up setting currently used in volts.
Expected operating time	0.000...1800.000s	0.005s	Displays the expected operating time when a fault occurs.
Time remaining to trip	-1800.000...1800.000s	0.005s	When the function has detected a fault and counts down time towards a trip, this displays how much time is left before tripping occurs.
U_{meas}/U_{set}	0.00...1250.00U_m/U_{set}	0.01U_m/U_{set}	The ratio between the measured third harmonic residual voltage and the pick-up value.
Measured $U_{0\ 3rd}$ harm (%)	0.00...1250.00%U_{0n}	0.01%U_{0n}	Measured third harmonic residual voltage in relation to voltage transformer nominal.
Measured $U_{0\ 3rd}$ harm (Pri)	0.00...1250.00V	0.01V	Measured third harmonic residual voltage on the primary side of voltage transformer.

Function blocking

The blocking signal is evaluated at the start of each program cycle. The blocking signals are connected to the function's dedicated input, which can be configured in the *IO → Blocking Input Control* tab of the function.

- When the pick-up element activates and the blocking signal is not active, a START signal is generated, and the function starts or continues with the trip time countdown.
- When the pick-up element activates and the blocking signal is active, a BLOCKED signal is generated, and the function does not process the event further.

- When a START signal is already active and the blocking input signal becomes active, the START signal is reset and BLOCKED signal is generated. The release time characteristics are then processed in the same way as when the pick-up signal is reset.

The blocking signal needs to reach the device minimum of 5 ms before the set operating delay has passed in order for the blocking to activate in time.

Operating time characteristics for trip and reset

The operating timers' behavior during a function can be set for TRIP signal and also for the release of the function in case the pick-up element is reset before the trip time has been reached. There are three basic operating modes available for the function:

- Instant operation: gives the TRIP signal with no additional time delay simultaneously with the START signal.
- Definite time operation (DT): gives the TRIP signal after a user-defined time delay regardless of the measured or calculated voltage as long as the voltage is above the U_{set} value and thus the pick-up element is active (independent time characteristics).
- Inverse definite minimum time (IDMT): gives the TRIP signal after a time which is in relation to the set pick-up voltage U_{set} and the measured voltage U_m (dependent time characteristics).

The IDMT function follows this formula:

$$t = \frac{k}{\left(\left(\frac{Um}{Us}\right) - 1\right)^{a}}$$

Where:

- t = operating time
- k = time dial setting
- U_m = measured voltage
- U_s = pick-up setting
- a = IDMT multiplier setting

The following table presents the setting parameters for the function's time characteristics.

Table. 4.5.25 - 323. Setting parameters for operating time characteristics.

Name	Range	Step	Default	Description
Delay type	• DT • IDMT	-	DT	Selection of the delay type time counter. The selection possibilities are dependent (IDMT, Inverse Definite Minimum Time) and independent (DT, Definite Time) characteristics.
Definite operating time delay	0.000…1800.000s	0.005s	0.040s	Definite time operating delay. The setting is active and visible when DT is the selected delay type. When set to 0.000 s, the stage operates as instant without added delay. When the parameter is set to 0.005...1800 s, the stage operates as independent delayed.
Time dial setting k	0.01…60.00s	0.01s	0.05s	The setting is active and visible when IDMT is the selected delay type. Time dial/multiplier setting for IDMT characteristics.

© Arcteq Relays Ltd

Name	Range	Step	Default	Description
IDMT Multiplier	0.01…25.00s	0.01s	1.00s	The setting is active and visible when IDMT is the selected delay type. IDMT time multiplier in the U_m/U_{set} power.

Table. 4.5.25 - 324. Setting parameters for reset time characteristics.

Name	Range	Step	Default	Description
Release time delay	0.000…150.000s	0.005s	0.06s	Resetting time. Time allowed between pick-ups if the pick-up has not led to a trip operation. During this time the START signal is held on for the timers if the delayed pick-up release is active.
Delayed pick-up release	• No • Yes	-	Yes	Resetting characteristics selection either as time-delayed or as instant after the pick-up element is released. If activated, the START signal is reset after a set release time delay.
Time calc reset after release time	• No • Yes	-	Yes	Operating timer resetting characteristics selection. When active, the operating time counter is reset after a set release time if the pick-up element is not activated during this time. When disabled, the operating time counter is reset directly after the pick-up element reset.
Continue time calculation during release time	• No • Yes	-	No	Time calculation characteristics selection. If activated, the operating time counter continues until a set release time has passed even if the pick-up element is reset.

The user can reset characteristics through the application. The default setting is a 60 ms delay; the time calculation is held during the release time.

In the release delay option the operating time counter calculates the operating time during the release. When using this option the function does not trip if the input signal is not re-activated while the release time count is on-going.

Events and registers

The 100 % stator earth fault protection function (abbreviated "SEF" in event block names) generates events and registers from the status changes in the events listed below. The user can select which event messages are stored in the main event buffer: ON, OFF, or both. The events triggered by the function are recorded with a time stamp.

The function's outputs can be used for direct I/O controlling and user logic programming. The function also provides a resettable cumulative counter for the START, TRIP and BLOCKED events.

Table. 4.5.25 - 325. Event messages.

Event block name	Event names
SEF1	Start ON/OFF
SEF1	Trip ON/OFF
SEF1	Block ON/OFF

The function registers its operation into the last twelve (12) time-stamped registers. The register of the function records the ON event process data for START, TRIP or BLOCKED. The table below presents the structure of the function's register content.

Table. 4.5.25 - 326. Register content.

Register	Description
Date and time	dd.mm.yyyy hh:mm:ss.mss
Event	Event name
Pre-trigger voltage	Start/Trip -20ms impedance
Fault voltage	Start/Trip voltage
Pre-fault voltage	Start -200ms voltage
Trip time remaining	0 ms...1800s
Setting group in use	Setting group 1...8 active

4.5.26 Underexcitation protection (Q<; 40)

Synchronous machines require a certain amount of excitation to stay stable. If the excitation drops too low a synchronous machine can drop out of step. One way for the function to sense underexcitation is by measuring reactive power. When the generator induces capacitive power, the value of reactive power is negative (and thus the excitation current can be low enough for the synchronous machine to drop out of step). Underexcitation protection supervises capacitive power and picks up when the set kvar value is exceeded.

Measured input

The function block uses three-phase reactive power values and three-phase active power values. Please refer to "Power and energy calculation" chapter for a detailed description of power calculation.

Table. 4.5.26 - 327. Measurement inputs of the Q< function.

Signal	Description
3PH Reactive power (Q)	Total three-phase reactive power
3PH Active Power (P)	Total three-phase active power

General settings

The following general settings define the general behavior of the function. These settings are static i.e. it is not possible to change them by editing the setting group.

© Arcteq Relays Ltd

Table. 4.5.26 - 328. General settings of the function.

Name	Range	Default	Description
Q< LN mode	• On • Blocked • Test • Test/ Blocked • Off	On	Set mode of UEX block. This parameter is visible only when *Allow setting of individual LN mode* is enabled in *General* menu.
Q< force status to	• Normal • Start • Trip • Blocked	Normal	Force the status of the function. Visible only when *Enable stage forcing* parameter is enabled in *General* menu.
Q< measurement selection	• POW1 • POW2	POW1	Defines which side of power measurement is used. POW1 and POW2 can be set up at *Measurements → Power and energy measurements*.

Pick-up settings

Setting group selection controls the operating characteristics of the function, i.e. the user or user-defined logic can change function parameters while the function is running.

The reset ratio of 97 % is built into the function and is always relative to the $Q_{set}<$ value.

Table. 4.5.26 - 329. Mode selection parameter.

Name	Range	Step	Default	Description
Qset mode	• Fixed • P-dependent • Dynamic S dependent	-	Fixed	Decides whether the pick-up area is defined only by the $Q_{set}<$ parameter or by measured active power (P).

Table. 4.5.26 - 330. Pick-up settings in "Fixed" mode.

Name	Range	Step	Default	Description
Pick-up setting Qset<	-100 000…0.0 kvar	0.01 kvar	-100 kvar	In Fixed mode: sets the pick-up value for the function. In P-dependent mode: chooses the reactive power for the first point.
k multiplier	0.01…3.00	0.01	1.00	Underexcitation operating area shrinks or expands based on the generator's measured voltage level. At 100% of the nominal voltage (Un), the underexcitation limit operates as set. However, at a 90% nominal voltage level, the pick-up setting point (Q) is reduced by a multiplier of 0.9x. As the generator and network voltage level decreases, the underexcitation becomes more sensitive.

Figure. 4.5.26 - 147. Underexcitation protection in "Fixed" mode.

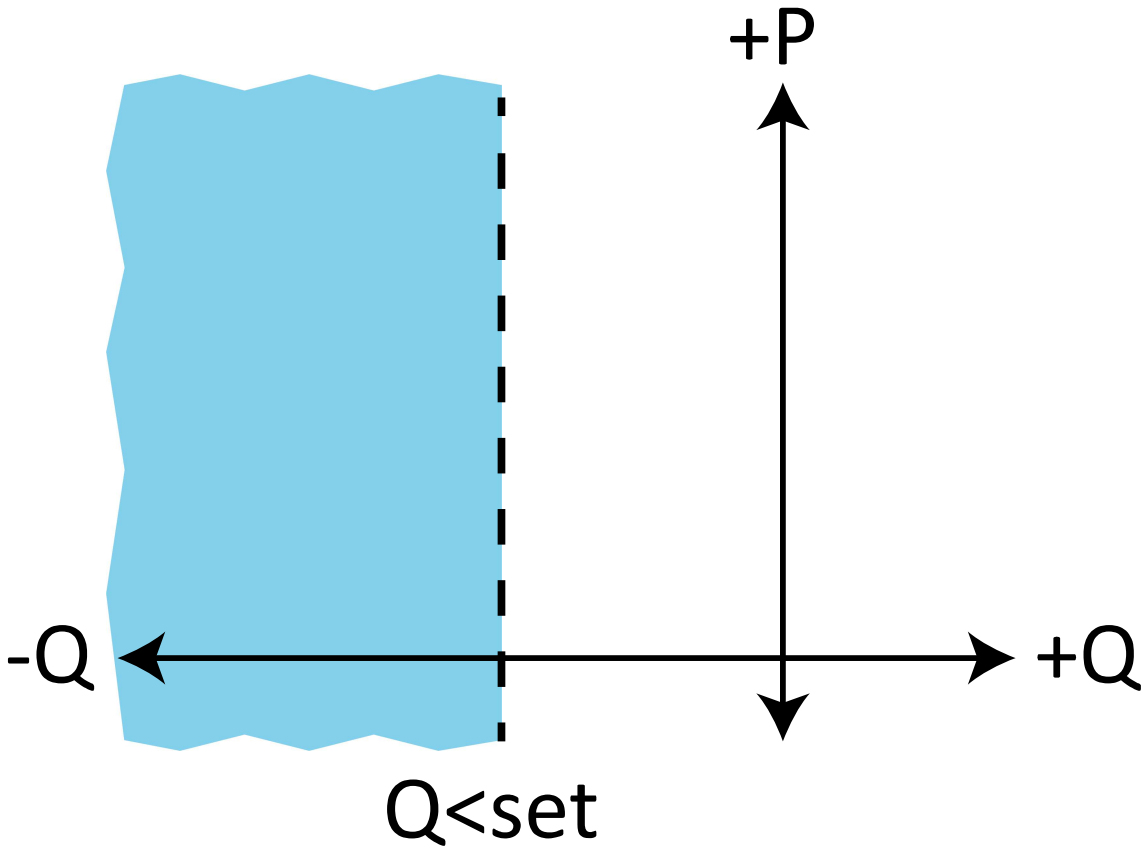

Table. 4.5.26 - 331. Pick-up settings in "P dependent" mode.

Name	Range	Step	Default	Description
Pick-up setting Qset<	-100 000…0.0 kvar	0.01 kvar	-100 kvar	Chooses the reactive power for the first point.
Pick-up setting P1 for Qset<	0.0…100 000 kW	0.01 kW	100 kW	The value of the active power for Q_{set}<.
Pick-up setting Qset2<	-100 000…0.0 kvar	0.01 kvar	-100 kvar	Chooses the reactive power for the second point.
Pick-up setting P2 for Qset2<	0.0…100 000 kW	0.01 kW	100 kW	The value of the active power for Q_{set2}<.
k multiplier	0.01…3.00	0.01	1.00	Underexcitation operating area shrinks or expands based on the generator's measured voltage level. At 100% of the nominal voltage (Un), the underexcitation limit operates as set. However, at a 90% nominal voltage level, the pick-up setting point (Q) is reduced by a multiplier of 0.9x. As the generator and network voltage level decreases, the underexcitation becomes more sensitive.

© Arcteq Relays Ltd

Figure. 4.5.26 - 148. Underexcitation protection in "P dependent" mode.

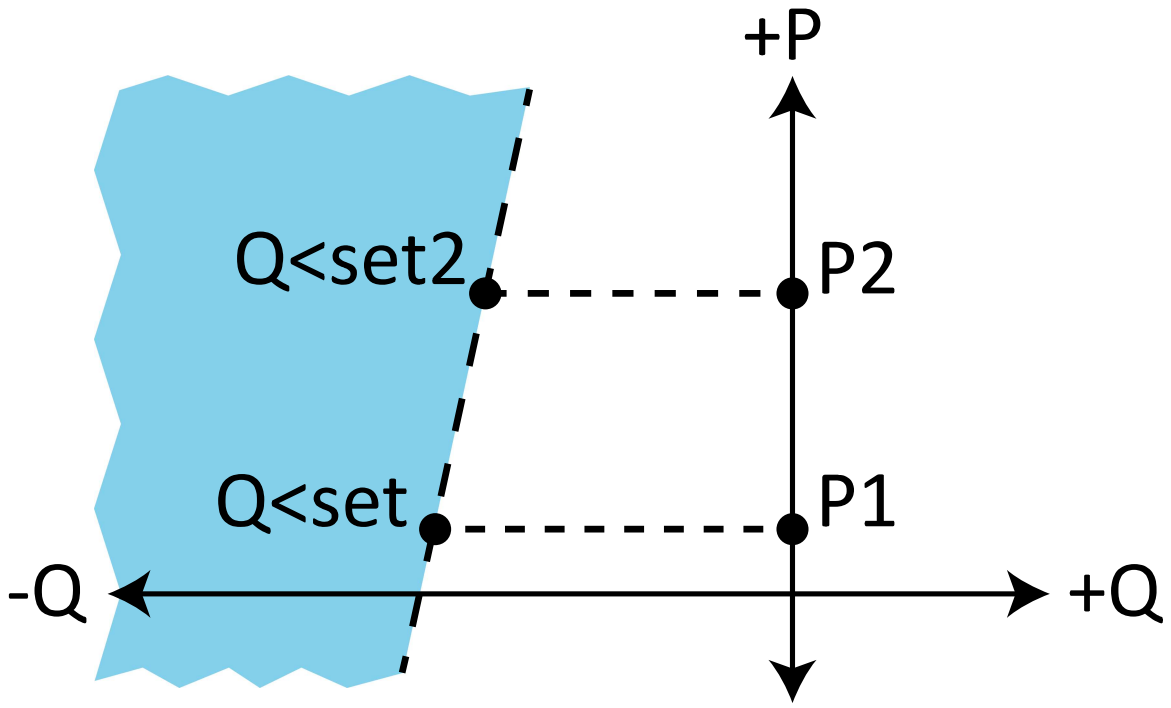

Table. 4.5.26 - 332. Pick-up settings in "Dynamic S dependent" mode.

Name	Range	Step	Default	Description
Min. Q% of S nominal [1]	-120…-10	0.1	-30.0	Reactive power value of the first point.
P%/Sn [1]	0.0…100.0	0.1	100	Active power value of the first point.
Min. Q% of S nominal [2]	-120…-10	0.1	-25.0	Reactive power value of the second point.
P%/Sn [2]	0.0…100.0	0.1	75.0	Active power value of the second point.
Min. Q% of S nominal [3]	-120…-10	0.1	-20.0	Reactive power value of the third point.
P%/Sn [3]	0.0…100.0	0.1	50.0	Active power value of the third point.
Min. Q% of S nominal [4]	-120…-10	0.1	-15.0	Reactive power value of the fourth point.

Name	Range	Step	Default	Description
P%/Sn [4]	0.0…100.0	0.1	25.0	Active power value of the fourth point.
Min. Q% of S nominal [5]	-120…-10	0.1	-10.0	Reactive power value of the fifth point.
P%/Sn [5]	-	-	0.0	Active power value of the fifth point. Fixed to zero.
Enable voltage multiplier	• Enabled • Disabled	-	Enabled	Enables or disables the k multiplier parameter.
k multiplier	0.01…3.00	0.01	1.00	If this setting is activated, the underexcitation operating area shrinks or expands based on the generator's measured voltage level. At 100% of the nominal voltage (Un), the underexcitation limit operates as set. However, at a 90% nominal voltage level, each setting point (1-5) reactive setting (Q) is reduced by a multiplier of 0.9x. As the generator and network voltage level decreases, the underexcitation becomes more sensitive.

Dynamic S dependent operating mode allows the user to create an underexcitation protection area, which is adjusted using five setting points. Each setting point has two parameters: reactive power (Q) and active power (P), which are set as a percentage of the apparent power (S) (set at *Protection → Generator Module → INFO → Generator Characteristics and Measurement Setup*). If turbine limitations allow the generator to operate at 80% active power of the rated armature power (S), the first setting point should start from 80%. The last, fifth setting point automatically ends at 0% kVA.

Figure. 4.5.26 - 149. Underexcitation protection in "Dynamic S dependent" mode.

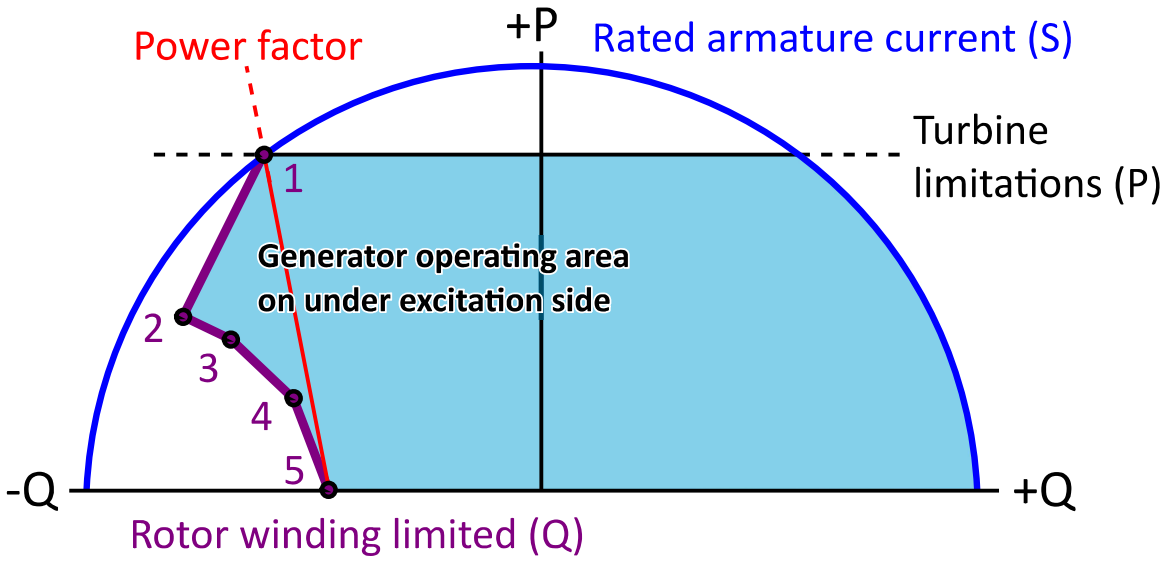

Read-only parameters

The function's *Info* page displays useful, real-time information on the state of the protection function. It is accessed either through the device's HMI display, or through the setting tool software when it is connected to the device and its Live Edit mode is active.

© Arcteq Relays Ltd

Table. 4.5.26 - 333. Information displayed by the function.

Name	Range	Step	Description
Q< LN behaviour	• On • Blocked • Test • Test/Blocked • Off	-	Displays the mode of UEX block. This parameter is visible only when *Allow setting of individual LN mode* is enabled in *General* menu.
Q< condition	• Normal • Start • Trip • Blocked	-	Displays the status of the protection function.
Q< selected measurement	• POW1CT1 • POW1CT2 • POW2CT1 • POW2CT2 • Undefined	-	Displays the selected power measurement. This indication is visible if the device has more than one current measurement unit.
Nominal apparent power	0.10…1 000 000.00 kVA	0.01 kVA	Displays the nominal apparent power set at *Protection → Generator Module → INFO → Generator Characteristics and Measurement Setup*
Q pickup level now (%/Sn)	-1 000 000…1 000 000 %/Sn	0.01 %/Sn	Displays the ratio between the underexcitation pick-up level (Q) currently and the nominal apparent power.
Pickup level now	1 000 000 kvar…1 000 000 kvar	0.01 kvar	Displays the underexcitation pick-up level (Q) in kvar value.
Expected operating time	0.000...1800.000 s	0.005 s	Displays the expected operating time when a fault occurs.
Time remaining to trip	-1800.000...1800.000 s	0.005 s	When the function has detected a fault and counts down time towards a trip, this displays how much time is left before tripping occurs.
Q_{meas}/Q_{set} at the moment	-1250.00...1250.00 Q_m/Q_{set}	0.01 Q_m/Q_{set}	The ratio between the measured reactive power and the pick-up value.

Function blocking

The blocking signal is evaluated at the start of each program cycle. The blocking signals are connected to the function's dedicated input, which can be configured in the *IO → Blocking Input Control* tab of the function.

- When the pick-up element activates and the blocking signal is not active, a START signal is generated, and the function starts or continues with the trip time countdown.
- When the pick-up element activates and the blocking signal is active, a BLOCKED signal is generated, and the function does not process the event further.
- When a START signal is already active and the blocking input signal becomes active, the START signal is reset and BLOCKED signal is generated. The release time characteristics are then processed in the same way as when the pick-up signal is reset.

The blocking signal needs to reach the device minimum of 5 ms before the set operating delay has passed in order for the blocking to activate in time.

Operating time characteristics for trip and reset

This function supports definite time delay (DT). For detailed information on these delay types please refer to the chapter "General properties of a protection function" and its section "Operating time characteristics".

Events and registers

The underexcitation function (abbreviated "UEX" in event block names) generates events and registers from the status changes in the events listed below. The user can select which event messages are stored in the main event buffer: ON, OFF, or both. The events triggered by the function are recorded with a time stamp.

The function's output can be used for direct I/O controlling and user logic programming. The function also provides a resettable cumulative counter for the START, TRIP and BLOCKED events.

Table. 4.5.26 - 334. Event messages.

Event block name	Event names
UEX1	Start ON/OFF
UEX1	Trip ON/OFF
UEX1	Block ON/OFF

The function registers its operation into the last twelve (12) time-stamped registers. The register of the function records the ON event process data for START, TRIP or BLOCKED. The table below presents the structure of the function's register content.

Table. 4.5.26 - 335. Register content.

Register	Description
Event	Event name
Date and time	dd.mm.yyyy hh:mm:ss.mss
Pre-trigger power (P&Q)	Start/Trip -20ms power
Fault power (P&Q)	Start/Trip power
Pre-fault power (P&Q)	Start -200ms power
Trip time remaining	0 ms...1800s
Setting group in use	Setting group 1...8 active

4.5.27 Underimpedance protection (Z<; 21U)

Underimpedance protection is an alternative for voltage-restrained overcurrent protection. It can be used to detect short-circuit faults near the generator even when the short-circuit current is small. Additionally, under impedance protection can be used as backup protection for transformer protection.

© Arcteq Relays Ltd

Figure. 4.5.27 - 150. Operating characteristics of underimpedance protection.

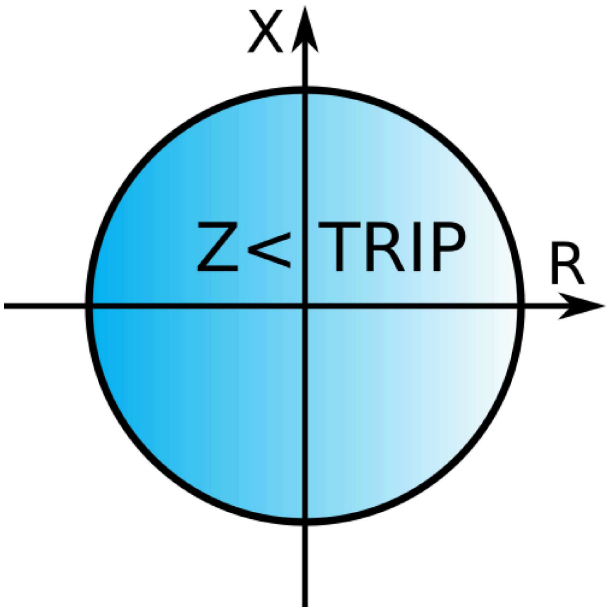

Measured input

The function block uses phase currents and phase-to-phase or phase-to-neutral voltage measurement values. These values are used for calculating impedance.

Table. 4.5.27 - 336. Measurement inputs of the Z< function.

Signal	Description
I_{L1}RMS	Fundamental frequency component of phase L1 (A) current
I_{L2}RMS	Fundamental frequency component of phase L2 (B) current
I_{L3}RMS	Fundamental frequency component of phase L3 (C) current
U_1RMS	Fundamental frequency component of voltage channel U_1/V
U_2RMS	Fundamental frequency component of voltage channel U_2/V
U_3RMS	Fundamental frequency component of voltage channel U_3/V
U_4RMS	Fundamental frequency component of voltage channel U_4/V

General settings

The following general settings define the general behavior of the function. These settings are static i.e. it is not possible to change them by editing the setting group.

Table. 4.5.27 - 337. General settings of the function.

Name	Range	Default	Description
Z< LN mode	• On • Blocked • Test • Test/ Blocked • Off	On	Set mode of UIM block. This parameter is visible only when *Allow setting of individual LN mode* is enabled in *General* menu.
Z< force status to	• Normal • Start • Trip • Blocked	Normal	Force the status of the function. Visible only when *Enable stage forcing* parameter is enabled in *General* menu.
Operation mode	• P-E Impedances • P-P Impedances • Pos. seq. Impedance	P-E Impedance	Selects the used impedances.

Pick-up settings

The Z_{set} *(pri)*< setting parameter controls the the pick-up of the Z< function. This defines the minimum allowed measured impedance before action from the function. The function constantly calculates the ratio between the impedance pick-up leveland the calculated impedance for each of the three stages or the positive sequence impedance. The reset ratio of 103 % is built into the function and is always relative to the current pick-up value.

Setting group selection controls the operating characteristics of the function, i.e. the user or user-defined logic can change function parameters while the function is running.

Table. 4.5.27 - 338. Pick-up settings.

Name	Range	Step	Default	Description
Z_{set} (pri)<	0.10…150.00Ω	0.01Ω	10Ω	Pick-up setting as primary side impedance

Read-only parameters

The function's *Info* page displays useful, real-time information on the state of the protection function. It is accessed either through the device's HMI display, or through the setting tool software when it is connected to the device and its Live Edit mode is active.

Table. 4.5.27 - 339. Information displayed by the function.

Name	Range	Step	Description
Z< LN behaviour	• On • Blocked • Test • Test/Blocked • Off	-	Displays the mode of UIM block. This parameter is visible only when *Allow setting of individual LN mode* is enabled in *General* menu.

© Arcteq Relays Ltd

Name	Range	Step	Description
Z< condition	• Normal • Start • Trip • Blocked	-	Displays status of the protection function.
Expected operating time	0.000...1800.000s	0.005s	Displays the expected operating time when a fault occurs.
Time remaining to trip	-1800.000...1800.000s	0.005s	When the function has detected a fault and counts down time towards a trip, this displays how much time is left before tripping occurs.
Z_{meas}/Z_{set} at the moment	0.00...1250.00	0.01	The ratio between the lowest measured impedance and the pick-up value.

Function blocking

The blocking signal is evaluated at the start of each program cycle. The blocking signals are connected to the function's dedicated input, which can be configured in the *IO → Blocking Input Control* tab of the function.

- When the pick-up element activates and the blocking signal is not active, a START signal is generated, and the function starts or continues with the trip time countdown.
- When the pick-up element activates and the blocking signal is active, a BLOCKED signal is generated, and the function does not process the event further.
- When a START signal is already active and the blocking input signal becomes active, the START signal is reset and BLOCKED signal is generated. The release time characteristics are then processed in the same way as when the pick-up signal is reset.

The blocking signal needs to reach the device minimum of 5 ms before the set operating delay has passed in order for the blocking to activate in time.

Operating time characteristics for trip and reset

This function supports definite time delay (DT). For detailed information on these delay types please refer to the chapter "General properties of a protection function" and its section "Operating time characteristics".

Events and registers

The underimpedance protection function (abbreviated "UIM" in event block names) generates events and registers from the status changes in the events listed below. The user can select which event messages are stored in the main event buffer: ON, OFF, or both. The events triggered by the function are recorded with a time stamp.

The function's outputs can be used for direct I/O controlling and user logic programming. The function also provides a resettable cumulative counter for the START, TRIP and BLOCKED events.

The function offers two (2) independent stages; the events are segregated for each stage operation.

Table. 4.5.27 - 340. Event messages.

Event block name	Event names
UIM1...UIM2	Start ON/OFF
UIM1...UIM2	Trip ON/OFF
UIM1...UIM2	Block ON/OFF

The function registers its operation into the last twelve (12) time-stamped registers. The register of the function records the ON event process data for START, TRIP or BLOCKED. The table below presents the structure of the function's register content.

Table. 4.5.27 - 341. Register content.

Register	Description
Date and time	dd.mm.yyyy hh:mm:ss.mss
Event	Event name
Fault type	A-E...A-B-C
Pre-trigger impedance	Start/Trip -20ms impedance
Fault impedance	Start/Trip impedance
Pre-fault impedance	Start -200ms impedance
Trip time remaining	0 ms...1800s
Setting group in use	Setting group 1...8 active

4.5.28 Underexcitation protection (X<; 40)

Synchronous machines require a certain amount of excitation to stay stable. If the excitation drops too low a synchronous machine can drop out of step. One way for the protection relay to sense underexcitation is by measuring the impedance. When the measured impedance enters the defined circle, the function will trip.

Figure. 4.5.28 - 151. Underexcitation protection with impedance measurement.

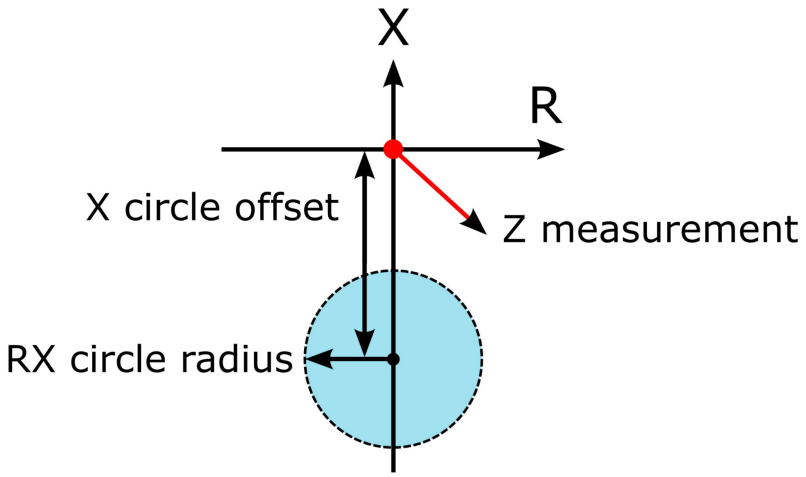

© Arcteq Relays Ltd

Measured input

The function block uses phase currents and line-to-line or line-to-neutral voltages to calculate phase-to-phase impedance values, phase-to-neutral impedance values or positive sequence impedance values.

Table. 4.5.28 - 342. Measurement inputs of the X< function.

Signal	Description
Z1 Impedance loop	Phase-to-neutral impedance loop
Z2 Impedance loop	Phase-to-neutral impedance loop
Z3 Impedance loop	Phase-to-neutral impedance loop
Z12 Impedance loop	Phase-to-phase impedance loop
Z23 Impedance loop	Phase-to-phase impedance loop
Z31 Impedance loop	Phase-to-phase impedance loop
Positive sequence impedance	Pos.seq. impedance calculated from three phases

General settings

The following general settings define the general behavior of the function. These settings are static i.e. it is not possible to change them by editing the setting group.

Table. 4.5.28 - 343. General settings of the function.

Name	Range	Default	Description
X< LN mode	• On • Blocked • Test • Test/ Blocked • Off	On	Set mode of URX block. This parameter is visible only when *Allow setting of individual LN mode* is enabled in *General* menu.
X< force status to	• Normal • Start • Trip • Blocked	Normal	Force the status of the function. Visible only when *Enable stage forcing* parameter is enabled in *General* menu.
Operation mode	• P-E impedances • Pos. Seq. impedances • P-P impedances	P-E impedances	Defines which available measurement is used by the function.

Pick-up settings

The *X circle offset* and *RX circle radius* setting parameters control the pick-up of the X< function. This defines the tripping area of the function. The function constantly monitors the distance between the defined circle and the measured impedance. The reset ratio of 103 % is built into the function and is always relative to the RX circle radius.

Setting group selection controls the operating characteristics of the function, i.e. the user or user-defined logic can change function parameters while the function is running.

Table. 4.5.28 - 344. Pick-up settings.

Name	Range	Step	Default	Description
X circle offset (pri)	-50 000...50 000 Ohm	0.01 Ohm	-50.00 Ohm	Sets the distance from origo to the edge of tripping area.
RX circle radius (pri)	0.01...50 000 Ohm	0.01 Ohm	50.00 Ohm	Sets the radius of tripping area.

Read-only parameters

The function's *Info* page displays useful, real-time information on the state of the protection function. It is accessed either through the device's HMI display, or through the setting tool software when it is connected to the device and its Live Edit mode is active.

Table. 4.5.28 - 345. Information displayed by the function.

Name	Range	Step	Description
X< LN behaviour	• On • Blocked • Test • Test/Blocked • Off	-	Displays the mode of URX block. This parameter is visible only when *Allow setting of individual LN mode* is enabled in *General* menu.
X< condition	• Normal • Start • Trip • Blocked	-	Displays the status of the protection function.
Expected operating time	0.000...1800.000s	0.005s	Displays the expected operating time when a fault occurs.
Time remaining to trip	-1800.000...1800.000s	0.005s	When the function has detected a fault and counts down time towards a trip, this displays how much time is left before tripping occurs.
Z_{meas}/Z_{set} at the moment	-1250.00...1250.00 Z_m/Z_{set}	0.01Z_m/Z_{set}	The ratio between the measured impedance and the pick-up value.

Function blocking

The blocking signal is evaluated at the start of each program cycle. The blocking signals are connected to the function's dedicated input, which can be configured in the *IO → Blocking Input Control* tab of the function.

- When the pick-up element activates and the blocking signal is not active, a START signal is generated, and the function starts or continues with the trip time countdown.
- When the pick-up element activates and the blocking signal is active, a BLOCKED signal is generated, and the function does not process the event further.

© Arcteq Relays Ltd

- When a START signal is already active and the blocking input signal becomes active, the START signal is reset and BLOCKED signal is generated. The release time characteristics are then processed in the same way as when the pick-up signal is reset.

The blocking signal needs to reach the device minimum of 5 ms before the set operating delay has passed in order for the blocking to activate in time.

Operating time characteristics for trip and reset

This function supports definite time delay (DT). For detailed information on this delay type please refer to the chapter "General properties of a protection function" and its section "Operating time characteristics".

Events and registers

The underexcitation function (abbreviated "URX" in event block names) generates events and registers from the status changes in the events listed below. The user can select which event messages are stored in the main event buffer: ON, OFF, or both. The events triggered by the function are recorded with a time stamp.

The function's outputs can be used for direct I/O controlling and user logic programming. The function also provides a resettable cumulative counter for the START, TRIP and BLOCKED events.

Table. 4.5.28 - 346. Event messages.

Event block name	Event names
URX1...URX2	Start ON/OFF
URX1...URX2	Trip ON/OFF
URX1...URX2	Block ON/OFF

The function registers its operation into the last twelve (12) time-stamped registers. The register of the function records the ON event process data for START, TRIP or BLOCKED. The table below presents the structure of the function's register content.

Table. 4.5.28 - 347. Register content.

Register	Description
Date and time	dd.mm.yyyy hh:mm:ss.mss
Event	Event name
Pre-trigger impedance (Z)	Start/Trip -20ms impedance
Fault impedance (Z)	Start/Trip impedance
Pre-fault impedance (Z)	Start -200ms impedance
Trip time remaining	0 ms...1800s
Setting group in use	Setting group 1...8 active

4.5.29 Voltage-restrained overcurrent protection (Iv>; 51V)

Short-circuits that occur close to the generator decrease the fault current which in turn inhibits the operation of a high-set overcurrent stage. The decreasing voltage caused by these faults can be used to decrease the current pick-up level and thus to improve sensitivity. This voltage-restrained overcurrent protection function can be used as an alternative for the underimpedance function for more sensitive short-circuit detection in generator protection applications.

When there is a short-circuit near the generator, the voltage decreases which in this function's case decreases the overcurrent's pick-up level according to set parameters. The function can work as voltage-controlled overcurrent protection or as voltage-restrained overcurrent protection. When the set parameter value Ux2 is greater than Ux1, the protection function works as voltage-restrained overcurrent protection. In this case the overcurrent pick-up value increases as the voltage increases between the set values Ux1 and Ux2. The protection function uses positive sequence voltage to define the pick-up level at that moment.

When the set value of Ux1 is equal to Ux2, the function works as voltage-controlled overcurrent protection. Now the overcurrent protection doesn't operate until a fault reduces the voltage below a set value, usually about 80 % of the normal. A fixed pick-up level of voltage-controlled overcurrent protection is easier to coordinate with other protection devices. However, the voltage-restrained overcurrent protection function is less prone to making unwanted operations on motor starting currents and system swings.

Figure. 4.5.29 - 152. Pick-up levels in the two modes.

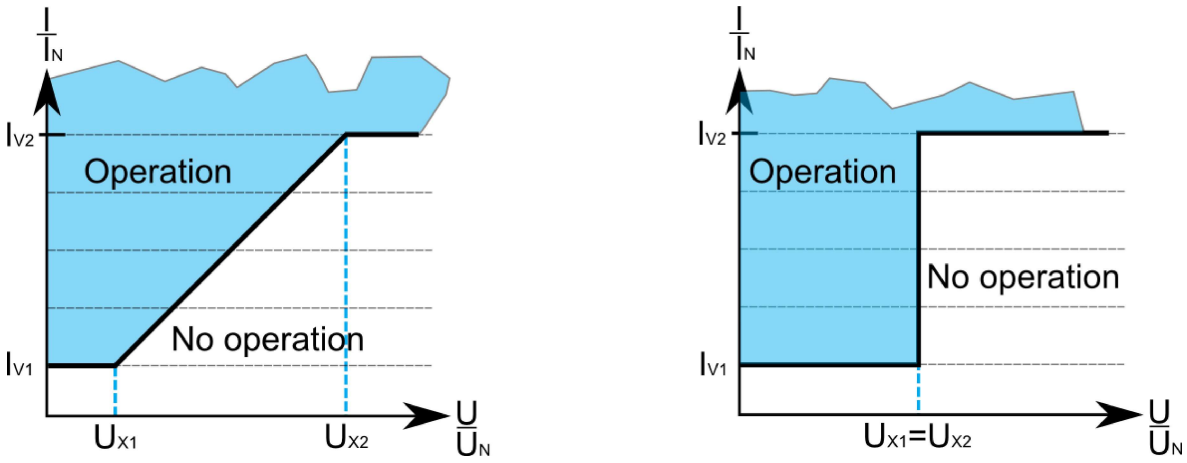

Measured input

The function block uses fundamental frequency component of phase current measurement values. The function block uses fundamental frequency component of phase-to-phase, phase-to-neutral and zero sequence voltage.

Table. 4.5.29 - 348. Measurement inputs of the voltage-restrained overcurrent protection function.

Signal	Description
I_{L1}RMS	Fundamental frequency component of phase L1 (A) current
I_{L2}RMS	Fundamental frequency component of phase L2 (B) current
I_{L3}RMS	Fundamental frequency component of phase L3 (C) current
U_1RMS	Fundamental frequency component of voltage channel U_1/V

© Arcteq Relays Ltd

Signal	Description
U_2RMS	Fundamental frequency component of voltage channel U_2/V
U_3RMS	Fundamental frequency component of voltage channel U_3/V
U_4RMS	Fundamental frequency component of voltage channel U_4/V

General settings

The following general settings define the general behavior of the function. These settings are static i.e. it is not possible to change them by editing the setting group.

Table. 4.5.29 - 349. General settings of the function.

Name	Range	Default	Description
Iv> LN mode	• On • Blocked • Test • Test/ Blocked • Off	On	Set mode of VOC block. This parameter is visible only when *Allow setting of individual LN mode* is enabled in *General* menu.
Iv> force status to	• Normal • Start • Trip • Blocked	Normal	Force the status of the function. Visible only when *Enable stage forcing* parameter is enabled in *General* menu.

Pick-up settings

The *Iv1*, *Iv2*, *Ux1*, *Ux2* setting parameters and *the positive sequence voltage measurement* control the pick-up level of the voltage-restrained overcurrent protection function. The pick-up level defines the maximum allowed measured current before action from the function. The function constantly calculates the ratio between the current pick-up level and the measured magnitude (I_m) for each of the three phases. The reset ratio of 97 % is built into the function and is always relative to the current pick-up value.

Setting group selection controls the operating characteristics of the function, i.e. the user or user-defined logic can change function parameters while the function is running.

Table. 4.5.29 - 350. Pick-up settings.

Name	Range	Step	Default	Description
1st knee point (Iv>)	0.10…40.00xI_n	0.01xI_n	0.2 xI_n	The lower current limit.
2nd knee point (Iv2>)	0.10…40.00xI_n	0.01xI_n	1.2xI_n	The higher current limit.

Name	Range	Step	Default	Description
1st knee point voltage (Ux1)	0.00…150.00%U_n	0.01%U_n	20%U_n	The lower voltage limit.
2nd knee point voltage (Ux2)	0.00…150.00%U_n	0.01%U_n	100%U_n	The higher voltage limit. When this value is higher than Ux1, the function operates as voltage-restrained overcurrent protection. If the two values are equal, the function operates as voltage-controlled overcurrent protection.

Read-only parameters

The function's *Info* page displays useful, real-time information on the state of the protection function. It is accessed either through the device's HMI display, or through the setting tool software when it is connected to the device and its Live Edit mode is active.

Table. 4.5.29 - 351. Information displayed by the function.

Name	Range	Step	Description
Iv> LN behaviour	• On • Blocked • Test • Test/Blocked • Off	-	Displays the mode of VOC block. This parameter is visible only when *Allow setting of individual LN mode* is enabled in *General* menu.
Iv> condition	• Normal • Start • Trip • Blocked	-	Displays status of the protection function.
Expected operating time	0.000...1800.000s	0.005s	Displays the expected operating time when a fault occurs. When IDMT mode is used, the expected operating time depends on the measured highest phase current value. If the measured current changes during a fault, the expected operating time changes accordingly.
Time remaining to trip	-1800.000...1800.000s	0.005s	When the function has detected a fault and counts down time towards a trip, this displays how much time is left before tripping occurs.
Voltage measurement	• Invalid U1 not avail. • Ok	-	If phase voltages are not available the function is not able to calculate positive sequence voltage (U1). This can happen when voltage measurement mode has been set to "3LL+U4" or "2LL+U3+U4" mode but none of the channels have been set to "U0" mode.
I> pick-up level now	0.00...1250.00xIn	0.01xIn	Overcurrent pick-up level used by the function at the moment. The pick-up level changes with positive sequence voltage setting changes.
Measured voltage now	0.00...1250.00%Un	0.01%Un	Calculated positive sequence voltage at the moment. This influences the overcurrent pick-up level used by the function.

© Arcteq Relays Ltd

Name	Range	Step	Description
I_{meas}/I_{set} at the moment	0.00...1250.00	0.01	The ratio between the highest measured phase current and the pick-up value.

Function blocking

The blocking signal is evaluated at the start of each program cycle. The blocking signals are connected to the function's dedicated input, which can be configured in the *IO → Blocking Input Control* tab of the function.

- When the pick-up element activates and the blocking signal is not active, a START signal is generated, and the function starts or continues with the trip time countdown.
- When the pick-up element activates and the blocking signal is active, a BLOCKED signal is generated, and the function does not process the event further.
- When a START signal is already active and the blocking input signal becomes active, the START signal is reset and BLOCKED signal is generated. The release time characteristics are then processed in the same way as when the pick-up signal is reset.

The blocking signal needs to reach the device minimum of 5 ms before the set operating delay has passed in order for the blocking to activate in time.

Operating time characteristics for trip and reset

This function supports definite time delay (DT) and inverse definite minimum time delay (IDMT). If IDMT is selected for this function, the time delay depends on the ratio between the measured current and the current pick-up level at that moment. This means that the operation time can also shorten as a result of the reduced voltage. For detailed information on these delay types please refer to the chapter "General properties of a protection function" and its section "Operating time characteristics".

Events and registers

The voltage-restrained overcurrent protection function (abbreviated "VOC" in event block names) generates events and registers from the status changes in the events listed below. The user can select which event messages are stored in the main event buffer: ON, OFF, or both. The events triggered by the function are recorded with a time stamp.

The function's outputs can be used for direct I/O controlling and user logic programming. The function also provides a resettable cumulative counter for the START, TRIP and BLOCKED events.

Table. 4.5.29 - 352. Event messages.

Event block name	Event names
VOC1	Start ON/OFF
VOC1	Trip ON/OFF
VOC1	Block ON/OFF

The function registers its operation into the last twelve (12) time-stamped registers. The register of the function records the ON event process data for START, TRIP or BLOCKED. The table below presents the structure of the function's register content.

Table. 4.5.29 - 353. Register content.

Register	Description
Date and time	dd.mm.yyyy hh:mm:ss.mss
Event	Event name
Fault type	L1-E…L1-L2-L3
Pre-trigger current	Start/Trip -20ms current
Fault current	Start/Trip current
U1 Voltage	Positive sequence voltage
Current pick-up	Pick-up current level
Pre-fault current	Start -200ms current
Trip time remaining	0 ms...1800s
Setting group in use	Setting group 1...8 active

4.5.30 Inadvertent energizing protection (I> U< I.A.E; 50/27)

Inadvertent energizing protection function is intended to be used for protection the generator from connecting the generator to network when it is not rotating. A machine that is accidentally energized from the power system can be damaged or completely destroyed.

Measured input

The function block uses fundamental frequency component of phase current measurement values. The function block uses fundamental frequency component of phase-to-phase, phase-to-neutral and zero sequence voltage.

Table. 4.5.30 - 354. Measurement inputs of the I> U< I.A.E function.

Signal	Description
I_{L1}RMS	Fundamental frequency component of phase L1 (A) current
I_{L2}RMS	Fundamental frequency component of phase L2 (B) current
I_{L3}RMS	Fundamental frequency component of phase L3 (C) current
U_1RMS	Fundamental frequency component of voltage channel U_1/V
U_2RMS	Fundamental frequency component of voltage channel U_2/V
U_3RMS	Fundamental frequency component of voltage channel U_3/V
U_4RMS	Fundamental frequency component of voltage channel U_4/V

General settings

The following general settings define the general behavior of the function. These settings are static i.e. it is not possible to change them by editing the setting group.

© Arcteq Relays Ltd

Table. 4.5.30 - 355. General settings of the function.

Name	Range	Default	Description
I>U< I.A.E LN mode	• On • Blocked • Test • Test/ Blocked • Off	On	Set mode of IAE block. This parameter is visible only when *Allow setting of individual LN mode* is enabled in *General* menu.
I>U< I.A.E. force status to	• Normal • Start • Trip • Blocked	Normal	Force the status of the function. Visible only when *Enable stage forcing* parameter is enabled in *General* menu.

Pick-up settings

Figure. 4.5.30 - 153. Operating characteristics of inadvertent energizing protection.

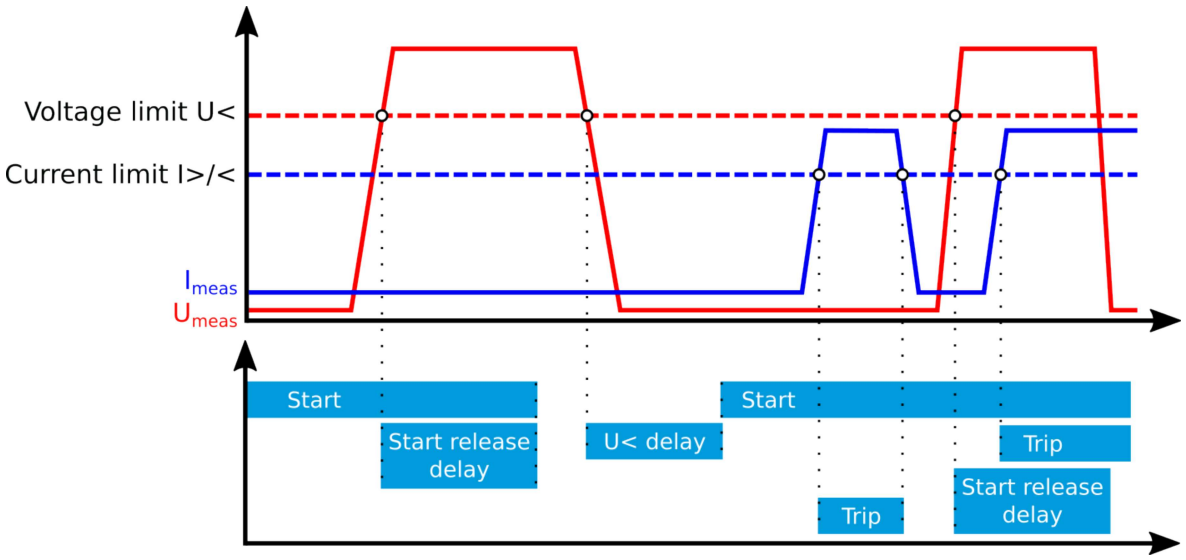

The *Voltage limit U<* and *Current limit I>/< activation* setting parameter controls the the pick-up of the function. Whenever the measured voltage is under the *Voltage limit U<* setting value the function is "Started". If voltage rises over the setting limit the function will wait for the duration set to *Time delay for releasing start condition* before releasing the start condition. When voltage decreases under *Voltage limit U<* the function will wait until duration set to *Time delay for U< activation* has passed. If the measured current rises over *Current limit I>/< activation* parameter while voltage is under the *Voltage limit U<* parameter the function will trip. Keep in mind that even if voltage is over the set limit the function can trip form rising current if start release time delay is still counting down.

Setting group selection controls the operating characteristics of the function, i.e. the user or user-defined logic can change function parameters while the function is running.

Table. 4.5.30 - 356. Pick-up settings.

Name	Range	Step	Default	Description
Voltage limit U<	0.00...99.00 %Un	0.01 %Un	50.00 %Un	Sets the under voltage limit for the function.

Name	Range	Step	Default	Description
Time delay for U< activation	0.000...1800.000 s	0.005 s	5.000 s	When the voltage drops under the *Voltage limit U<* setting the function will wait for the duration of this parameter setting to activate "start" condition.
Current limit I>/<	0.05...3.00 xIn	0.05 xIn	0.05 xIn	If "start" condition is on and each phase current is above this limit the function will trip.
Time delay for releasing start condition	0.000...1800.000 s	0.005 s	0.250 s	When measured voltage rises over *Voltage limit U<* setting the function will wait for the duration of this parameter setting before disabling start condition. If each phase current rises over *Current limit I>/< setting* while start release is still going on the function will trip.

Read-only parameters

The function's *Info* page displays useful, real-time information on the state of the protection function. It is accessed either through the device's HMI display, or through the setting tool software when it is connected to the device and its Live Edit mode is active.

Table. 4.5.30 - 357. Information displayed by the function.

Name	Range	Step	Description
I>U< I.A.E LN behaviour	• On • Blocked • Test • Test/Blocked • Off	-	Displays the mode of IAE block. This parameter is visible only when *Allow setting of individual LN mode* is enabled in *General* menu.
I>U< I.A.E condition	• Normal • Start • Trip • Blocked	-	Displays status of the protection function.
Expected operating time	0.000...1800.000s	0.005s	Displays the expected operating time when a fault occurs.
Time remaining to trip	-1800.000...1800.000s	0.005s	When the function has detected a fault and counts down time towards a trip, this displays how much time is left before tripping occurs.
Measured voltage / set now	0.00...1250.00	0.01	The ratio between the positive sequence voltage and the pick-up setting.
Measured min current / set now	0.00...1250.00	0.01	The ratio between the lowest measured phase current and the pick-up setting.

Function blocking

The blocking signal is evaluated at the start of each program cycle. The blocking signals are connected to the function's dedicated input, which can be configured in the *IO → Blocking Input Control* tab of the function.

© Arcteq Relays Ltd

- When the pick-up element activates and the blocking signal is not active, a START signal is generated, and the function starts or continues with the trip time countdown.
- When the pick-up element activates and the blocking signal is active, a BLOCKED signal is generated, and the function does not process the event further.
- When a START signal is already active and the blocking input signal becomes active, the START signal is reset and BLOCKED signal is generated. The release time characteristics are then processed in the same way as when the pick-up signal is reset.

The blocking signal needs to reach the device minimum of 5 ms before the set operating delay has passed in order for the blocking to activate in time.

Events and registers

The inadvertent energizing protection function (abbreviated "IAE" in event block names) generates events and registers from the status changes in the events listed below. The user can select which event messages are stored in the main event buffer: ON, OFF, or both. The events triggered by the function are recorded with a time stamp.

The function's outputs can be used for direct I/O controlling and user logic programming. The function also provides a resettable cumulative counter for the START, TRIP and BLOCKED events.

Table. 4.5.30 - 358. Event messages.

Event block name	Event names
IAE1	Start ON/OFF
IAE1	Trip ON/OFF
IAE1	Block ON/OFF

The function registers its operation into the last twelve (12) time-stamped registers. The register of the function records the ON event process data for START, TRIP or BLOCKED. The table below presents the structure of the function's register content.

Table. 4.5.30 - 359. Register content.

Register	Description
Date and time	dd.mm.yyyy hh:mm:ss.mss
Event	Event name
Phase current	Phase 1,2,3 [A,B,C] currents
Phase voltage	Phase AB, BC and CA voltages
Setting group in use	Setting group 1...8 active

4.5.31 Volts-per-hertz overexcitation protection (V/Hz>; 24)

Generators, transformers, and motors have their own, specific volts-per-hertz ratios under which these machines are expected to operate. Exceeding the V/Hz ratio results in machine overexcitation which causes iron core saturation in generators and transformers. This causes a breakdown of the insulation in the core's interlamination due to excessive voltage and eddy current heating. Additionally, stray flux is induced into non-laminated components which are not designed to carry flux-caused currents. In generators overexcitation typically occurs if the V/Hz ratio goes five percent above the nominal V/Hz ratio, with any possible damage happening within seconds. The most common situation for overexcitation is when a machine is off-line prior to synchronization.

The figure below shows how the pick-up settings and the measured frequency affect the pick-up level of the volts-per-hertz protection function.

Figure. 4.5.31 - 154. Effect of pick-up settings and the measured frequency to the overvoltage function's pick-up level.

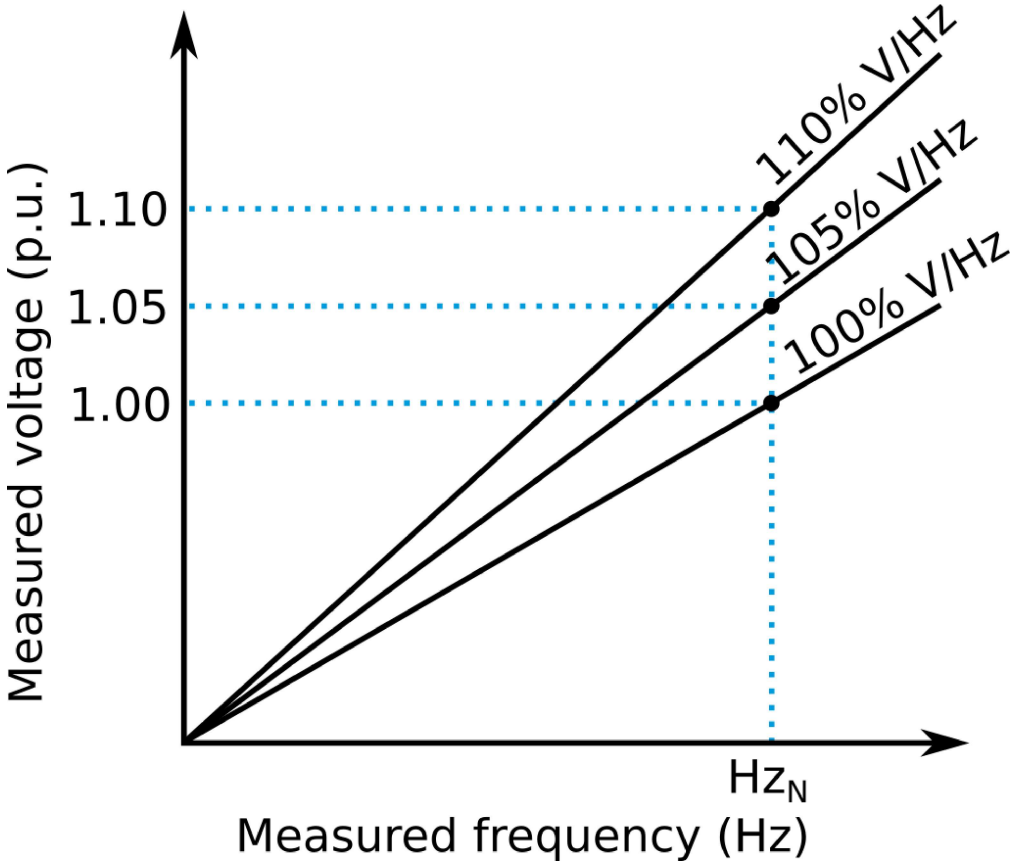

Measured input

The function block uses fundamental frequency component of phase-to-phase voltage measurements. Frequency measurement values is used for determining the overvoltage pick-up level. Please refer to "Frequency tracking and scaling" chapter for a detailed description of frequency tracking.

NOTICE!
The used sampling mode for frequency must be "Tracking".

© Arcteq Relays Ltd
IM00099

Table. 4.5.31 - 360. Measurement inputs of the volts-per-hertz function.

Signal	Description
U_1RMS	Fundamental frequency component of U_1/V voltage channel
U_2RMS	Fundamental frequency component of U_1/V voltage channel
U_3RMS	Fundamental frequency component of U_1/V voltage channel
U_4RMS	Fundamental frequency component of U_1/V voltage channel
Frequency reference 1	Primary frequency reference
Frequency reference 2	Secondary frequency reference
Frequency reference 3	Tertiary frequency reference

General settings

The following general settings define the general behavior of the function. These settings are static i.e. it is not possible to change them by editing the setting group.

Table. 4.5.31 - 361. General settings of the function.

Name	Range	Default	Description
V/Hz> LN mode	• On • Blocked • Test • Test/ Blocked • Off	On	Set mode of VHZ block. This parameter is visible only when *Allow setting of individual LN mode* is enabled in *General* menu.
V/Hz > force status to	• Normal • Start • Trip • Blocked	Normal	Force the status of the function. Visible only when *Enable stage forcing* parameter is enabled in *General* menu.

Pick-up settings

Volts-per-hertz protection is based on the ratio between the maximum phase-to-phase voltage and the measured system frequency. The *Pick-up V/Hz > (% of nominal)* setting parameter controls the pick-up of the volts-per-hertz function. This defines the maximum measured voltage allowed in relation to the measured frequency before action from the function. The function constantly calculates the ratio between the *Pick-up V/Hz (% of nominal)*and the calculated U_{meas}/f_{meas} ratio. The reset ratio of 97 % is built into the function and is always relative to the *Pick-up V/Hz (% of nominal)*value.

Setting group selection controls the operating characteristics of the function, i.e. the user or user-defined logic can change function parameters while the function is running.

Table. 4.5.31 - 362. Pick-up settings.

Name	Range	Step	Default	Description
Pick-up V/Hz > (% of nominal)	0.01…30.00%	0.01%	5.00%	The maximum allowed increase in the measured V/Hz ratio in relation to the nominal V/Hz ratio.

Name	Range	Step	Default	Description
Alarm delay (DT)	0.000...1800.000s	0.005s	0.040s	The definite operation time delay for alarm event.
Delay type	• DT • Inverse • DT and inverse	-	DT	Selects the delay type(s) for the time counter.
Time dial setting k	0.01...65.00	0.01	0.01	Defines the time dial/multiplier setting for inverse curve characteristics. This setting is active and visible when the "Delay type" parameter is set to "Inverse" or "DT and inverse".
Definite operating time delay	0.000…1800.000s	0.005s	0.040s	The definite operating time delay which is applied no matter how much the V/Hz ratio is exceeded. This setting is only visible, when the selected delay type is "DT" or "DT and inverse".

Inverse operating time characteristics are calculated according to the following equation:

$$t_{inverse} = DT_{set} + \frac{0.18 \times TimeDial\ k}{(\frac{V}{Hz_{measured}} - 1)^{IDMT_{multiplier}}}$$

Figure. 4.5.31 - 155. Inverse (above) and inverse and DT (below) time characteristics with the TimeDial k setting effect.

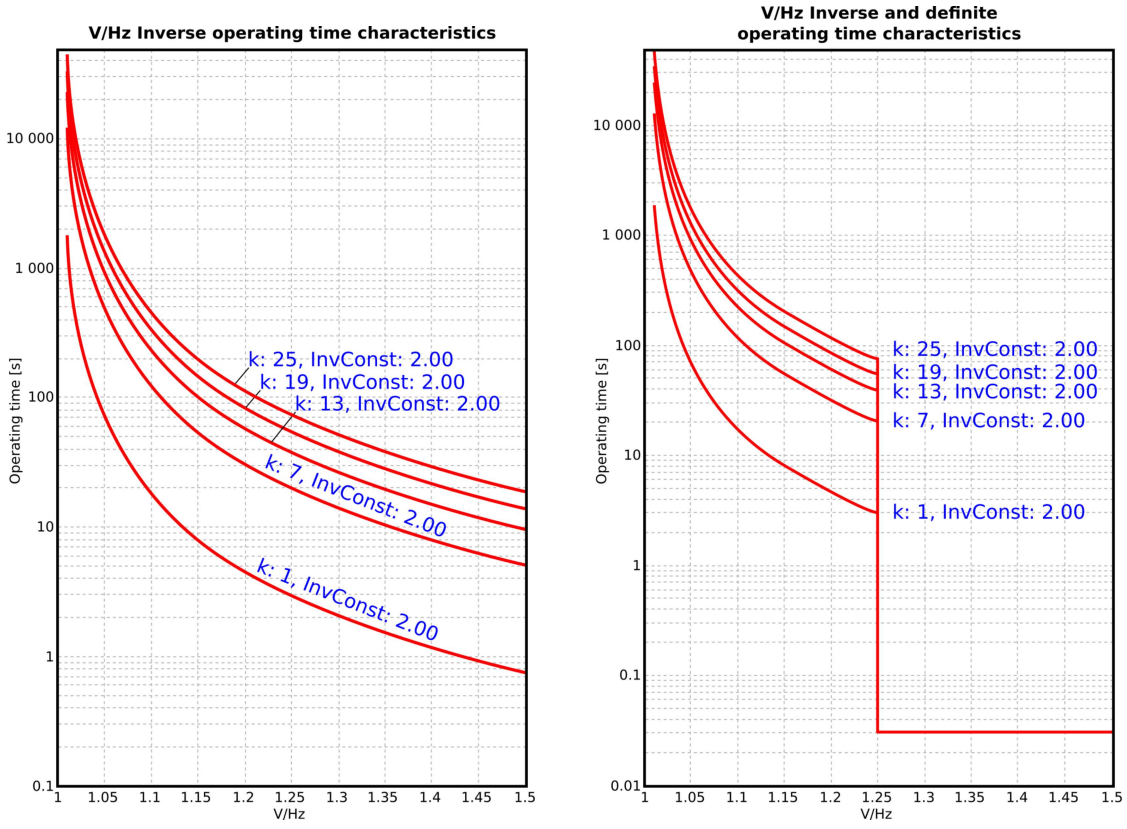

© Arcteq Relays Ltd

Figure. 4.5.31 - 156. Inverse (above) and inverse and DT (below) time characteristics with the inverse constant setting effect.

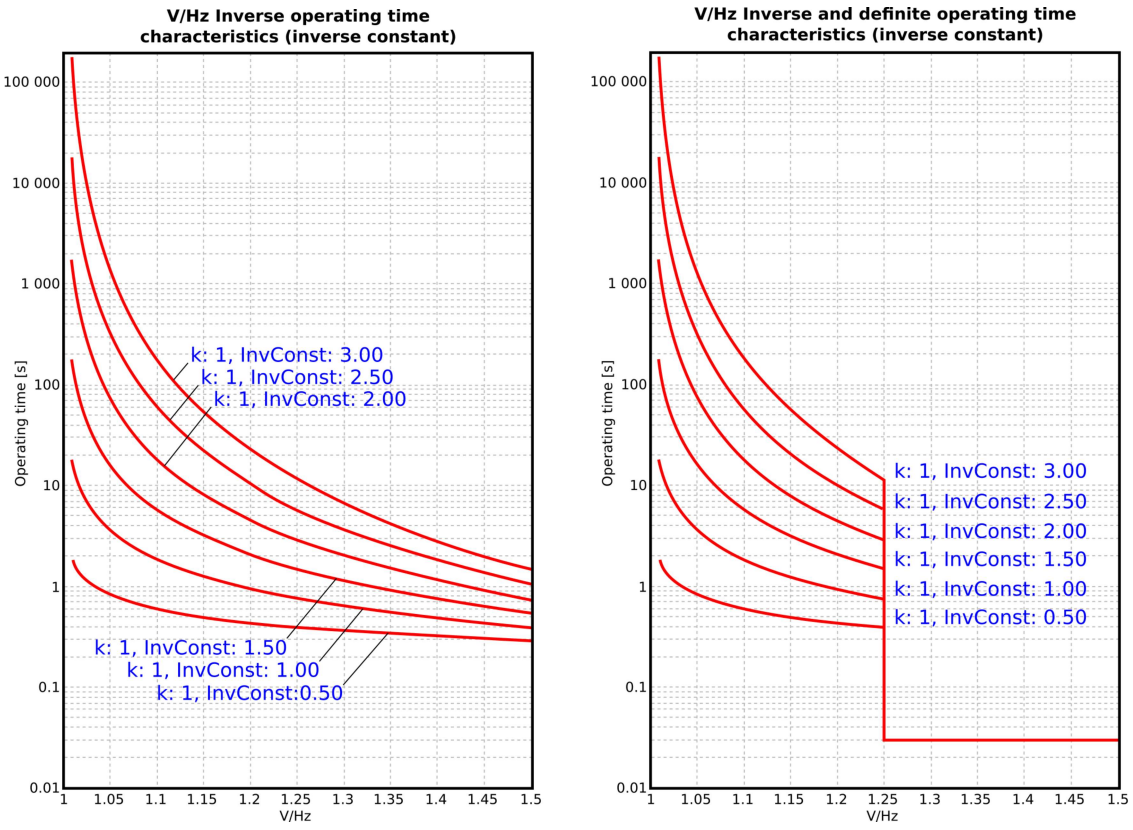

Read-only parameters

The function's *Info* page displays useful, real-time information on the state of the protection function. It is accessed either through the device's HMI display, or through the setting tool software when it is connected to the device and its Live Edit mode is active.

Table. 4.5.31 - 363. Information displayed by the function.

Name	Range	Step	Description
V/Hz> LN behaviour	• On • Blocked • Test • Test/Blocked • Off	-	Displays the mode of VHZ block. This parameter is visible only when *Allow setting of individual LN mode* is enabled in *General* menu.
V/ Hz> condition	• Normal • Start • Alarm • Trip • Blocked	-	Displays the status of the protection function.
Expected operating time	0.000...1800.000s	0.005s	Displays the expected operating time when a fault occurs.
Time remaining to trip	-1800.000...1800.000s	0.005s	When the function has detected a fault and counts down time towards a trip, this displays how much time is left before tripping occurs.

Name	Range	Step	Description
U/f atm to pick-up U/f ratio	-100.00...100.00%	0.01P_m/P_{set}	The ratio between the measured power and the pick-up value.
Nominal U/f	-100.000...100.000V/Hz	0.001V/Hz	Nominal volts-per-hertz ratio (voltage in per-unit value divided by nominal frequency). When 50Hz is used nominal U/f
U/f at the moment	-100.000...100.000V/Hz	0.001V/Hz	Volts-per-hertz at the moment.
U/f atm to nominal U/f ratio	-100.000...100.000V/Hz	0.001V/Hz	Measured volts-per-hertz ratio divided by nominal volts-per-hertz ratio.

Function blocking

The blocking signal is evaluated at the start of each program cycle. The blocking signals are connected to the function's dedicated input, which can be configured in the *IO → Blocking Input Control* tab of the function.

- When the pick-up element activates and the blocking signal is not active, a START signal is generated, and the function starts or continues with the trip time countdown.
- When the pick-up element activates and the blocking signal is active, a BLOCKED signal is generated, and the function does not process the event further.
- When a START signal is already active and the blocking input signal becomes active, the START signal is reset and BLOCKED signal is generated. The release time characteristics are then processed in the same way as when the pick-up signal is reset.

The blocking signal needs to reach the device minimum of 5 ms before the set operating delay has passed in order for the blocking to activate in time.

Events and registers

The volts-per-hertz overexcitation protection function (abbreviated "VHZ" in event block names) generates events and registers from the status changes in the events listed below. The user can select which event messages are stored in the main event buffer: ON, OFF, or both. The events triggered by the function are recorded with a time stamp.

The function's outputs can be used for direct I/O controlling and user logic programming. The function also provides a resettable cumulative counter for the START, TRIP and BLOCKED events.

The function offers one (1) stage

Table. 4.5.31 - 364. Event messages.

Event block name	Event names
VHZ1	V/Hz (1...2) Start ON/OFF
VHZ1	V/Hz (1...2) Alarm ON/OFF
VHZ1	V/Hz (1...2) Trip ON/OFF
VHZ1	V/Hz (1...2) Block ON/OFF

© Arcteq Relays Ltd

The function registers its operation into the last twelve (12) time-stamped registers. The register of the function records the ON event process data for START, TRIP or BLOCKED. The table below presents the structure of the function's register content.

Table. 4.5.31 - 365. Register content.

Name	Description
Date and time	dd.mm.yyyy hh:mm:ss.mss
Event	Event name
Voltages (AB/BC/CA) pre-trig	Start/Trip -20ms voltages
Frequency pre-trig	Start/Trip -20ms frequency
Voltages (AB/BC/AC) fault	Start/Trip voltages
Frequency fault	Start/Trip frequency
Voltages (AB/BC/AC) pre-fault	Start -200ms voltages
Frequency pre-fault	Start -200ms frequency
Trip time remaining	0 ms...1800 s
Setting group in use	Setting group 1...8 active

4.5.32 Power factor protection (PF<; 55)

The power factor protection function is the ratio of active power to apparent power (cos φ = P/S). In a fully resistive load the power factor is 1.00. In partially inductive loads the power factor is under 1.00. Power factor protection cannot detect a power factor value that is too low.

Figure. 4.5.32 - 157. Operating characteristics of power factor protection.

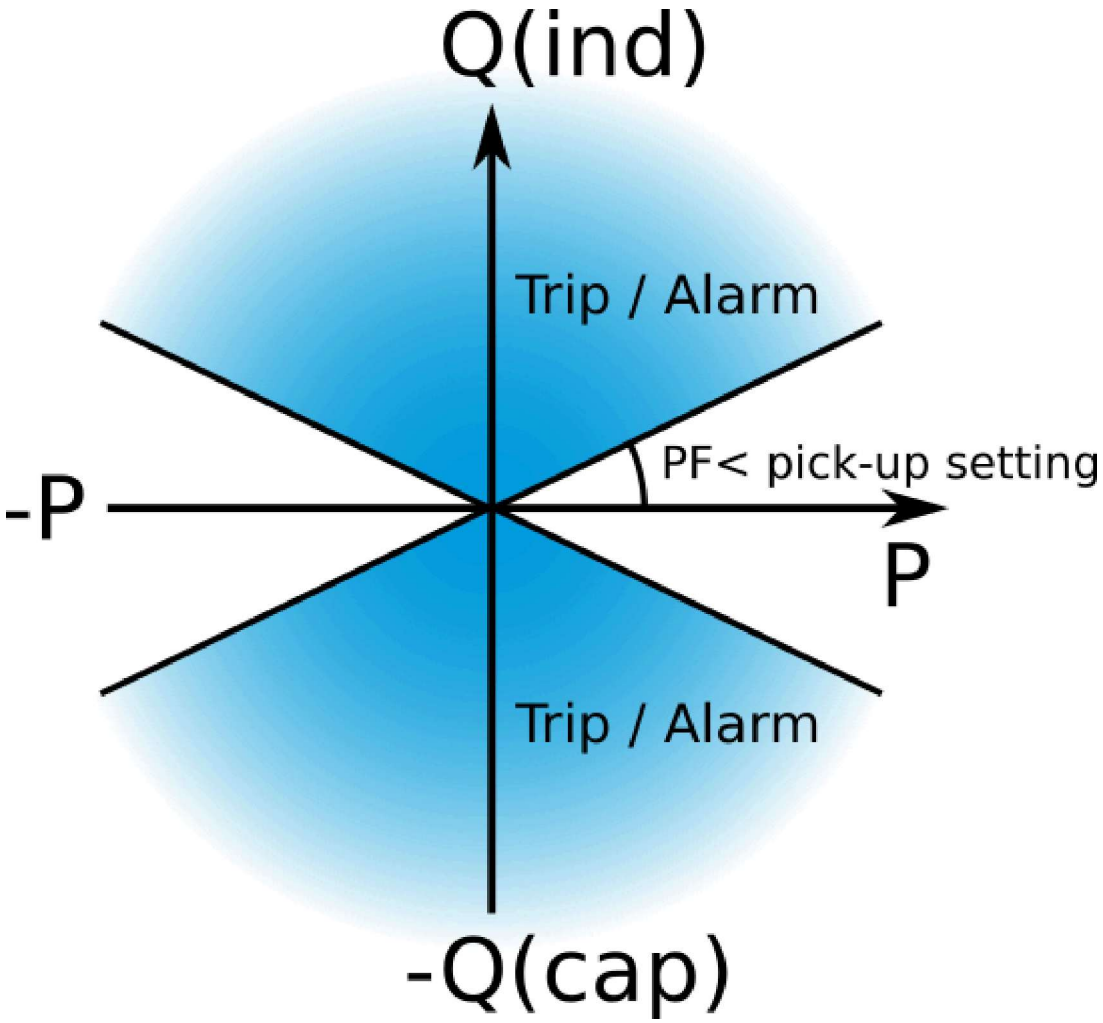

Measured input

The function block uses three phase power factor (cos phi). Please refer to "Power and energy calculation" chapter for a detailed description of how cos phi is calculated.

Table. 4.5.32 - 366. Measurement inputs of the PF< function.

Signal	Description
3PH cos φ	Three-phase cos phi (power factor)

General settings

The following general settings define the general behavior of the function. These settings are static i.e. it is not possible to change them by editing the setting group.

© Arcteq Relays Ltd
IM00099

Table. 4.5.32 - 367. General settings of the function.

Name	Range	Default	Description
PF< LN mode	• On • Blocked • Test • Test/ Blocked • Off	On	Set mode of UPF block. This parameter is visible only when *Allow setting of individual LN mode* is enabled in *General* menu.
PF< force status to	• Normal • Start • Trip • Blocked • Alarm Start • Alarm	Normal	Force the status of the function. Visible only when *Enable stage forcing* parameter is enabled in *General* menu.
PF< measurement selection	• POW1 • POW2	POW1	Defines which power measurement module is used by the function. This setting is available if the device has more than one current measurement module.

Pick-up settings

The *Pick-up setting PF< (lead or lag) Trip* and *Pick-up setting PF< (lead or lag) Alarm* setting parameters control the the pick-up of the PF< function. They define the minimum allowed power factor before action from the function. The function constantly calculates the ratio between the pick-up settings and the measured magnitude (power factor). The reset ratio of 103 % is built into the function and is always relative to the pick-up setting value.

Setting group selection controls the operating characteristics of the function, i.e. the user or user-defined logic can change function parameters while the function is running.

Table. 4.5.32 - 368. Pick-up settings.

Name	Range	Step	Default	Description
Available modes	• Trips • Trips and alarms	-	Trips and alarms	Enables or disables alarming.
Pick-up setting PF< (lead or lag) Trip	0.05…0.99	0.01	0.8	Pick-up setting for tripping
Pick-up setting PF< (lead or lag) Alarm	0.05…0.99	0.01	0.9	Pick-up setting for alarming. This parameter is only available when "Available modes" parameter has been set to "Trip and alarm".

Read-only parameters

The function's *Info* page displays useful, real-time information on the state of the protection function. It is accessed either through the device's HMI display, or through the setting tool software when it is connected to the device and its Live Edit mode is active.

Table. 4.5.32 - 369. Information displayed by the function.

Name	Range	Step	Description
PF< LN behaviour	• On • Blocked • Test • Test/Blocked • Off	-	Displays the mode of UPF block. This parameter is visible only when *Allow setting of individual LN mode* is enabled in *General* menu.
PF< condition	• Normal • Start • Trip • Blocked • Alarm Start • Alarm	-	Displays status of the protection function.
Expected alarming time	0.000...1800.000s	0.005s	Displays the expected alarming time when a fault occurs.
Time remaining to alarm	0.000...1800.000s	0.005s	When the function has detected a fault and counts down time towards an alarm, this displays how much time is left before alarm is activated.
PF_{meas} / PF_{alarm} at the moment	0.00...1250.00	0.01	The ratio between the measured power factor and the alarm pick-up value.
Expected operating time	0.000...1800.000s	0.005s	Displays the expected operating time when a fault occurs.
Time remaining to trip	-1800.000...1800.000s	0.005s	When the function has detected a fault and counts down time towards a trip, this displays how much time is left before tripping occurs.
PF_{meas} / PF_{set} at the moment	0.00...1250.00	0.01	The ratio between the measured power factor and the pick-up value.

Function blocking

The blocking signal is evaluated at the start of each program cycle. The blocking signals are connected to the function's dedicated input, which can be configured in the *IO → Blocking Input Control* tab of the function.

- When the pick-up element activates and the blocking signal is not active, a START signal is generated, and the function starts or continues with the trip time countdown.
- When the pick-up element activates and the blocking signal is active, a BLOCKED signal is generated, and the function does not process the event further.
- When a START signal is already active and the blocking input signal becomes active, the START signal is reset and BLOCKED signal is generated. The release time characteristics are then processed in the same way as when the pick-up signal is reset.

The blocking signal needs to reach the device minimum of 5 ms before the set operating delay has passed in order for the blocking to activate in time.

© Arcteq Relays Ltd

Operating time characteristics for trip and reset

This function supports definite time delay (DT). For detailed information on these delay types please refer to the chapter "General properties of a protection function" and its section "Operating time characteristics".

Events and registers

The power factor protection function (abbreviated "UPF" in event block names) generates events and registers from the status changes in the events listed below. The user can select which event messages are stored in the main event buffer: ON, OFF, or both. The events triggered by the function are recorded with a time stamp.

The function's outputs can be used for direct I/O controlling and user logic programming. The function also provides a resettable cumulative counter for the ALARM START, ALARM, START, TRIP and BLOCKED events.

Table. 4.5.32 - 370. Event messages.

Event block name	Event names
UPF1	Block ON/OFF
UPF1	Start ON/OFF
UPF1	Trip ON/OFF
UPF1	Alarm Start ON/OFF
UPF1	Alarm ON/OFF

The function registers its operation into the last twelve (12) time-stamped registers. The register of the function records the ON event process data for START, TRIP or BLOCKED. The table below presents the structure of the function's register content.

Table. 4.5.32 - 371. Register content.

Register	Description
Date and time	dd.mm.yyyy hh:mm:ss.mss
Event	Event name
Pre-trigger PF	Start/Trip -20ms power factor
Fault PF	Start/Trip power factor
Pre-fault PF	Start -200ms power factor
Trip time remaining	0 ms...1800s
Setting group in use	Setting group 1...8 active

4.5.33 Pole slip protection (78)

Pole slipping is a phenomenon where synchronism is lost due to power swings. This can happen in extreme fault conditions which cause a transient torque on the machine. Generators might experience this if it has low excitation, because it produces a weak magnetic field. The "slip" occurs when rotor electrically and physically shifts in relation to the stator, after which the field returns the rotor back in sync with the stator. This causes high acceleration and deceleration causes stress on the generator and prime mover, which can cause winding movement, shaft fracture or worse.

Figure. 4.5.33 - 158. Operating characteristics of pole slip protection.

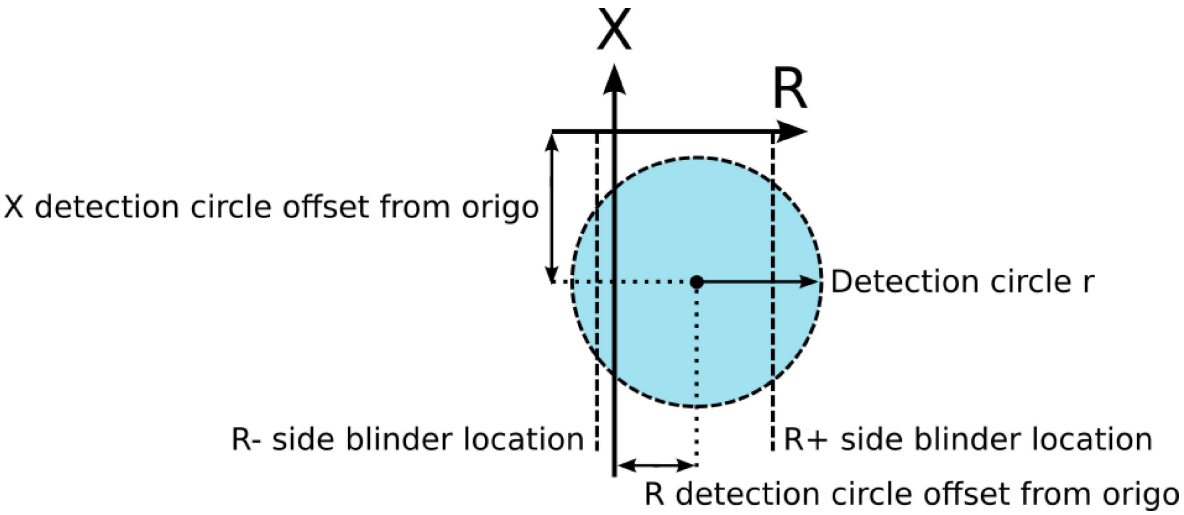

Measured input

The function block uses phase currents and phase-to-phase or phase-to-neutral voltage measurement values. These values are used for calculating positive sequence impedance.

Table. 4.5.33 - 372. Measurement inputs of the pole slip protection function.

Signal	Description
I_{L1}RMS	Fundamental frequency component of phase L1 (A) current
I_{L2}RMS	Fundamental frequency component of phase L2 (B) current
I_{L3}RMS	Fundamental frequency component of phase L3 (C) current
U_1RMS	Fundamental frequency component of voltage channel U_1/V
U_2RMS	Fundamental frequency component of voltage channel U_2/V
U_3RMS	Fundamental frequency component of voltage channel U_3/V
U_4RMS	Fundamental frequency component of voltage channel U_4/V

General settings

The following general settings define the general behavior of the function. These settings are static i.e. it is not possible to change them by editing the setting group.

© Arcteq Relays Ltd

Table. 4.5.33 - 373. General settings of the function.

Name	Range	Default	Description
Pole slip [78] LN mode	• On • Blocked • Test • Test/ Blocked • Off	On	Set mode of OOS block. This parameter is visible only when *Allow setting of individual LN mode* is enabled in *General* menu.
Pole slip force status to	• Normal • Start • Trip • Blocked	Normal	Force the status of the function. Visible only when *Enable stage forcing* parameter is enabled in *General* menu.

Pick-up settings

Parameters listed below determine the slip detection area. Slip detection area consists of detection circle and two side blinders. For a slip to be counted the impedance must first enter the circle, then while inside the circle the impedance must cross the blinders and then exit the circle. Keep in mind that the impedance must stay between the blinders longer than what is set to *Minimum locust traverse time between blinders* for the function to count the slip. If more than one slips are required for the function to trip the measured impedance must enter the circle from the same side each cycle. If time set to *Reset slip detection after last detected slip* has passed between slips the slip counter is reset.

Setting group selection controls the operating characteristics of the function, i.e. the user or user-defined logic can change function parameters while the function is running.

Table. 4.5.33 - 374. Pick-up settings.

Name	Range	Step	Default	Description
X detection circle offset from origin (pri)	-50 000.00...50 000.00 Ohm	0.01 Ohm	-50.00 Ohm	Moves the midpoint of circle in the X-axis (reactance).
R detection circle offset from origo (pri)	-50 000.00...50 000.00 Ohm	0.01 Ohm	0.00 Ohm	Moves the midpoint of circle in the R-axis (resistance).
Detection circle r (pri)	0.01...50 000.00 Ohm	0.01 Ohm	50.00 Ohm	Sets the radius of the detection circle.
R+ side blinder location (pri)	0.00...50 000.00 Ohm	0.01 Ohm	20.00 Ohm	R+ side blinder. Impedance must cross this level after entering the circle for the function to count a slip.
R- side blinder location (pri)	-50 000.00...0.00 Ohm	0.01 Ohm	-20.00 Ohm	R- side blinder. Impedance must cross this level after entering the circle for the function to count a slip.
Minimum locus traverse time between blinders	0.000...1800.00 s	0.005 s	0.050 s	Minimum time impedance must stay between the blinders so that the function will count a slip.
Pole slip detection limit to trip	1...5 slips	1 slips	1 slips	How many slips need to be detected for the function to trip.
Reset slip detection after last detected slip	0.000...1800.000 s	0.005 s	1.000 s	Maximum time between slips before the function resets the slip counter to zero.

Figure. 4.5.33 - 159. Impedance must enter the circle first then cross the blinders and lastly exit the circle for the function to count a slip. Impedance can enter the circle from either side but it must keep entering the circle from the same side for the function to keep counting the slips.

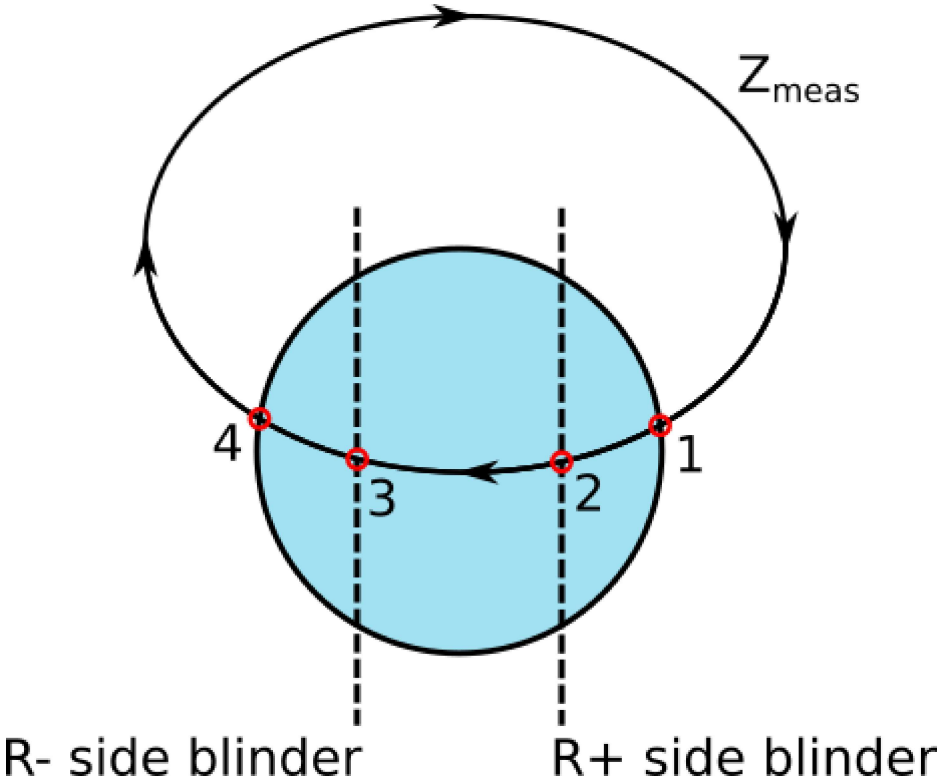

Read-only parameters

The function's *Info* page displays useful, real-time information on the state of the protection function. It is accessed either through the device's HMI display, or through the setting tool software when it is connected to the device and its Live Edit mode is active.

Table. 4.5.33 - 375. Information displayed by the function.

Name	Range	Description
Pole slip [78] LN behaviour	• On • Blocked • Test • Test/ Blocked • Off	Displays the mode of OOS block. This parameter is visible only when *Allow setting of individual LN mode* is enabled in *General* menu.
Pole slip condition	• Normal • Start • Trip • Blocked	Displays status of the protection function.
Configuration status	• Ok • Incorrect VT set • Incorrect char. Set	Displays the status of settings currently in use.

© Arcteq Relays Ltd

Function blocking

The blocking signal is evaluated at the start of each program cycle. The blocking signals are connected to the function's dedicated input, which can be configured in the *IO → Blocking Input Control* tab of the function.

- When the pick-up element activates and the blocking signal is not active, a START signal is generated, and the function starts or continues with the trip time countdown.
- When the pick-up element activates and the blocking signal is active, a BLOCKED signal is generated, and the function does not process the event further.
- When a START signal is already active and the blocking input signal becomes active, the START signal is reset and BLOCKED signal is generated. The release time characteristics are then processed in the same way as when the pick-up signal is reset.

The blocking signal needs to reach the device minimum of 5 ms before the set operating delay has passed in order for the blocking to activate in time.

Events and registers

The pole slip protection function (abbreviated "OOS" in event block names) generates events and registers from the status changes in the events listed below. The user can select which event messages are stored in the main event buffer: ON, OFF, or both. The events triggered by the function are recorded with a time stamp.

The function's outputs can be used for direct I/O controlling and user logic programming. The function also provides a resettable cumulative counter for the START, TRIP and BLOCKED events.

Table. 4.5.33 - 376. Event messages.

Event block name	Event names
OOS1	Poleslip Detection START ON/OFF
OOS1	Poleslipt Trip ON/OFF
OOS1	Poleslip Detection BLOCKED ON/OFF

The function registers its operation into the last twelve (12) time-stamped registers. The register of the function records the ON event process data for START, TRIP or BLOCKED. The table below presents the structure of the function's register content.

Table. 4.5.33 - 377. Register content.

Register	Description
Date and time	dd.mm.yyyy hh:mm:ss.mss
Event	Event name
In blinder time	Duration of reactance being between the blinders.
Setting group in use	Setting group 1...8 active

4.5.34 Machine thermal overload protection (TM>; 49M)

The thermal overload protection function for machines is used for the thermal capacity monitoring and protection of electric machines like synchronous and asynchronous motors and generators. This function can also be used for any applications with single or multiple time constansts, such as inductor chokes, certain types of transformers and any other static units which do not have active cooling apart from cables and overhead lines.

The function constantly monitors the instant values of phase TRMS currents (including harmonics up to 31st) and calculates the set thermal replica status in 5 ms cycles. The function includes a total memory function of the load current conditions according to IEC 60255-8.

The function is based on a thermal replica which represents the protected object's thermal loading in relation to the effective current in the object. The thermal replica includes the calculated thermal capacity that the "memory" uses; it is an integral function which tells apart this function from a normal overcurrent function and its operating principle for overload protection applications.

In heating and cooling situations the thermal image for this function is calculated according to the two equations described below:

Figure. 4.5.34 - 160. Long time constant thermal image calculation.

$$\theta_{tL} = \left(\left(\theta_{t-1} - \left(\frac{I_{EM}}{I_N \times k_{SF} \times k_{AMB}} \right)^2 \times e^{-\frac{t}{\tau_{1h}/\tau_{1c0}/\tau_{1cr}}} \right) + \left(\frac{I_{EM}}{I_N \times k_{SF} \times k_{AMB}} \right)^2 \right) \times (1 - W_f)$$

Where:

- θ_{t-1} = Thermal image status in a previous calculation cycle (the memory of the function)
- I_{EM} = (see below)
- I_N = Current for the 100 % thermal capacity to be used (pick-up current in p.u., with this current t_{max} achieved in time t)
- k_{SF} = Loading factor (service factor) coefficient, the maximum allowed load current in p.u., depending on the protected object
- k_{AMB} = Temperature correction factor, either from a linear approximation or from a settable ten-point thermal capacity curve
- e = Euler's number
- t = Calculation time step in seconds (0.005 s)
- τ_{1h} = Long thermal heating time constant of the protected object (in minutes)
- τ_{1c0} = Long thermal cooling time constant (motor stopped) of the protected object (in minutes)
- τ_{1cr} = Long thermal cooling time constant (motor running) of the protected object (in minutes)
- W_f = Correction factor between the times t_1 and t_2

© Arcteq Relays Ltd
IM00099

Figure. 4.5.34 - 161. Short time constant thermal image calculation.

$$\theta_{tS} = \left(\left(\theta_{t-1} - \left(\frac{I_{EM}}{I_N \times k_{SF} \times k_{AMB}} \right)^2 \times e^{-\frac{t}{\tau_{2h}/\tau_{2c}}} \right) + \left(\frac{I_{EM}}{I_N \times k_{SF} \times k_{AMB}} \right)^2 \right) \times W_f$$

Where:

- θ_{t-1} = Thermal image status in a previous calculation cycle (the memory of the function)
- I_{EM} = (see below)
- I_N = Current for the 100 % thermal capacity to be used (pick-up current in p.u., with this current t_{max} achieved in time t)
- k_{SF} = Loading factor (service factor) coefficient, the maximum allowed load current in p.u. value, depending on the protected object
- k_{AMB} = Temperature correction factor, either from a linear approximation or from a settable ten-point thermal capacity curve
- e = Euler's number
- t = Calculation time step in seconds (0.005 s)
- τ_{2h} = Short thermal heating time constant of the protected object (in minutes)
- τ_{2c} = Short thermal cooling time constant of the protected object (in minutes)
- W_f = Correction factor between the times t_1 and t_2

The equation below is that of the effective current of the protected object including the TRMS measurement maximum phase current as well as a possible phase current unbalance condition.

$$I_{EM} = \sqrt{\left(\left(1 + \left(\left(\frac{I_2}{I_1} \right)^2 \times k_{NPS} \right) \right) \times {I_{MAX}}^2 \right)}$$

Where:

- I_1 = Calculated positive sequence current of the measured RMS phase currents
- I_2 = Calculated negative sequence current of the measured RMS phase currents
- k_{NPS} = Correction factor of the NPS current biasing to the equivalent current calculation
- I_{MAX} = Measured maximum of the three TRMS phase currents

The thermal image status ($\theta_{t\%}$, in percentages of the maximum thermal capacity used) calculation is based on the sum of the long and short time constant thermal image calculation:

$$\theta_{t\%} = (\theta_{tL} + \theta_{tS}) \times 100\%$$

The basic operating principle of the thermal replica is based on the nominal temperature rise, which is achieved when the protected object is loaded with a nominal load in a nominal ambient temperature. When the object is loaded with a nominal load for a time equal to its heating constant tau (τ), 63% of the nominal thermal capacity is used. When the loading continues until five times this given constant, the used thermal capacity approaches 100 % indefinitely but never exceeds it. With a single time constant model the cooling of the object follows this same behavior, the reverse of the heating when the current feeding is completely zero.

Figure. 4.5.34 - 162. Thermal image calculation with nominal conditions: single time constant thermal replica.

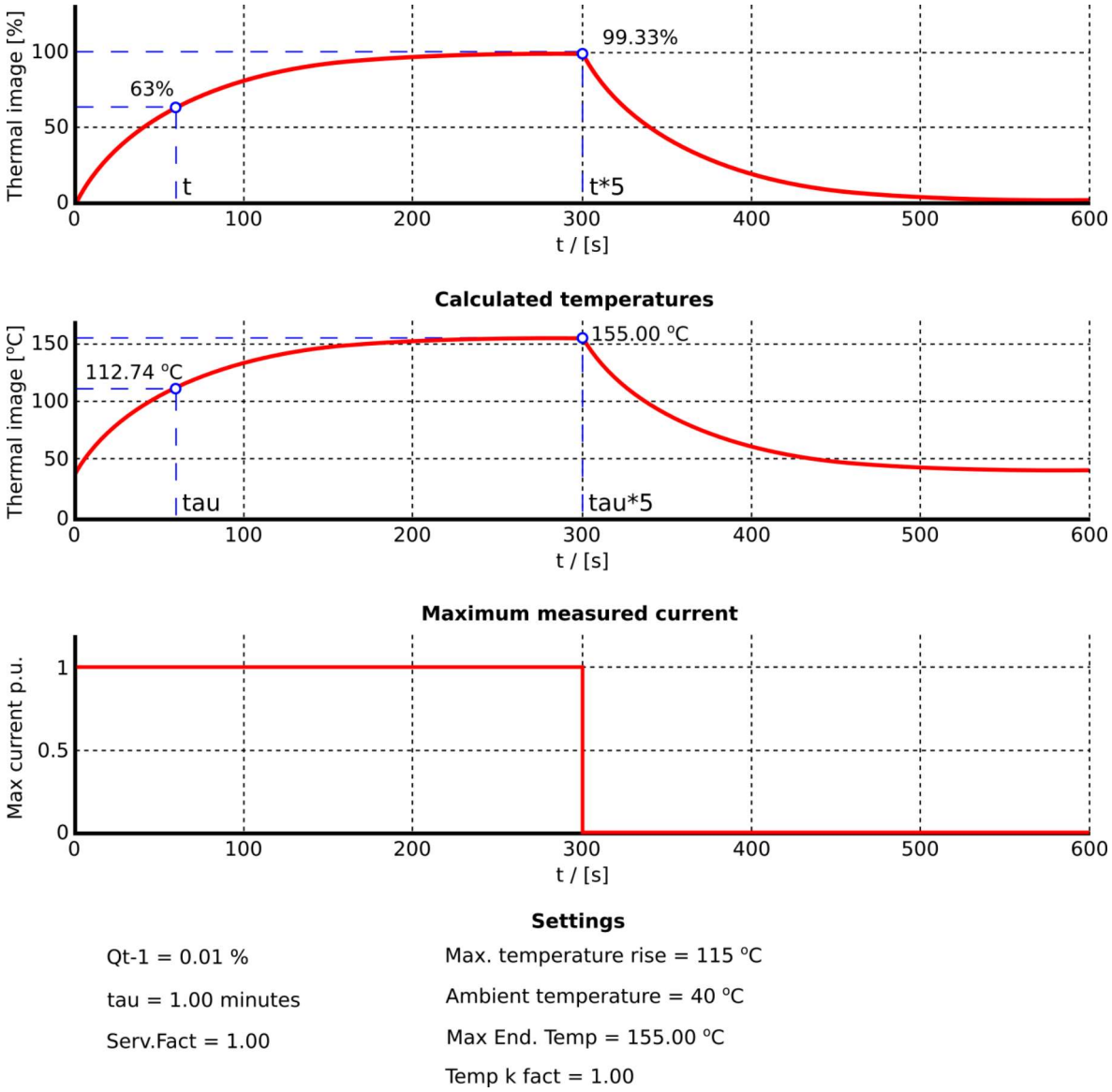

The described behavior is based on the assumption that the monitored object has a homogenous body which generates and dissipates heat with a rate proportional to the temperature rise caused by the current squared. Installation conditions considering the prevailing conditions in the thermal replica are compensated with the ambient temperature coefficient which is constantly calculated and changing when using RTD sensor for the measurement. When the ambient temperature of the protected object is stable it can be set manually.

The ambient temperature compensation takes into account the set minimum and maximum temperatures and the load capacity of the protected object as well as the measured or set ambient temperature. The formulas below present examples of the calculation of the ambient temperature coefficient (a linear correction factor to the maximum allowed current):

© Arcteq Relays Ltd

$$t_{Amb<t_{min}} = k_{min}$$

$$t_{Amb<t_{ref}} = \left(\frac{1 - k_{min}}{t_{ref} - t_{min}} \times (t_{AMB} - t_{min})\right) + k_{min}$$

$$t_{Amb>t_{ref}} = \left(\frac{k_{max} - 1}{t_{max} - t_{ref}} \times (t_{AMB} - t_{ref})\right) + 1.0$$

$$t_{Amb>t_{max}} = k_{max}$$

- t_{amb} = Measured (set) ambient temperature (can be set in ˚C or ˚F)
- t_{max} = Maximum temperature (can be set in ˚C or ˚F) for the protected object
- k_{max} = Ambient temperature correction factor for the maximum temperature
- t_{min} = Minimum temperature (can be set in ˚C or ˚F) for the protected object
- k_{min} = Ambient temperature correction factor for the minimum temperature
- t_{ref} = Ambient temperature reference (can be set in ˚C or ˚F, the temperature in which the given manufacturer presumptions apply and the temperature correction factor is 1.0)

Figure. 4.5.34 - 163. Ambient temperature coefficient calculation (linear approximation, three points).

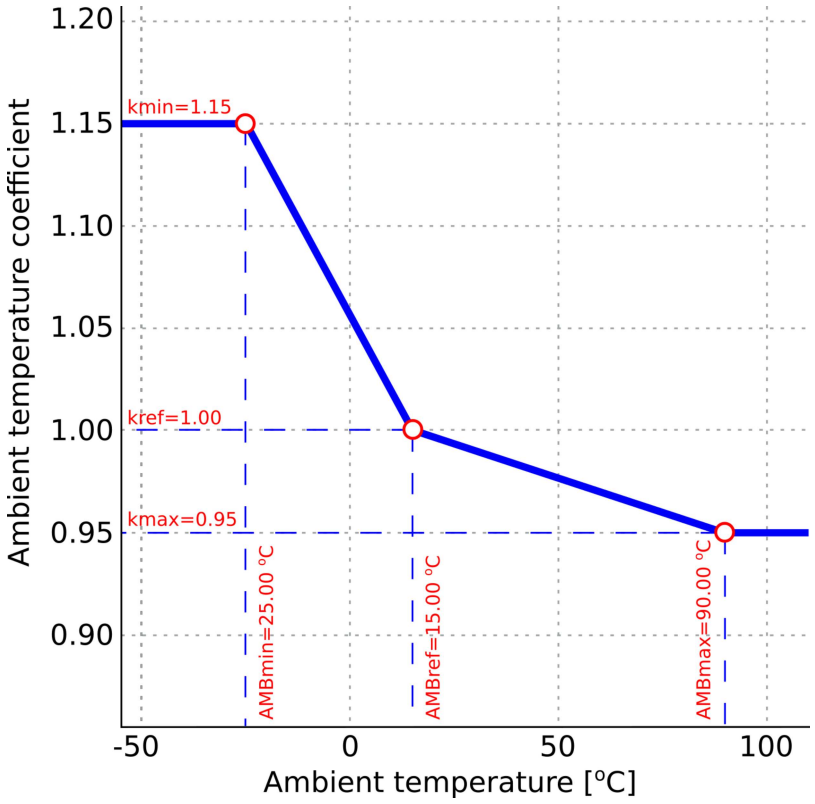

This ambient temperature coefficient relates to a nominal reference temperature. The default is +40 °C (the standard ambient temperature rating for machines) which gives the coefficient value of 1.00 for the thermal replica. The settable thermal capacity curve uses linear interpolation for ambient temperature correction with a maximum of ten (10) pairs of temperature–correction factor pairs. The temperature and coefficient pairs are set to the TM> function's settable correction curve.

Figure. 4.5.34 - 164. Ambient temperature coefficient calculation (linear approximation, indefinite points).

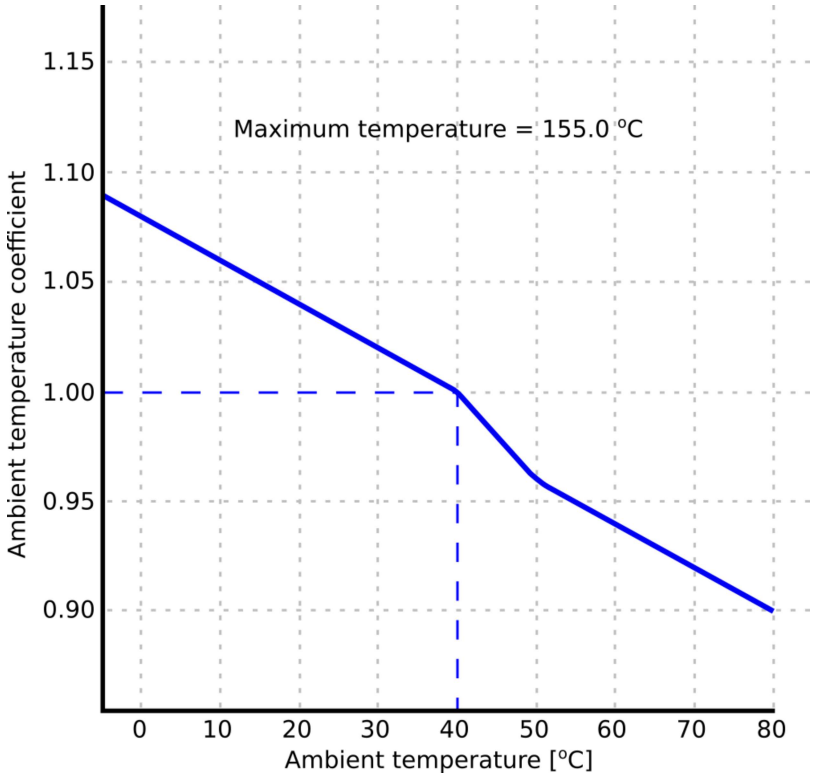

As mentioned in the previous diagram, the reference temperature for electric machines usually is +40 °C; this gives a correction coefficient of 1.00 which can be referred to as the nominal temperature in this case. The correction curve does not need to be set with as many points as there are available. The minimum setting is two pairs and the result is a straight line, for which the linear approximation is the better choice.

Multiple time constants

The thermal behaviour of the single time constant model was presented in the introduction of this chapter. However, it is not the optimal solution for electric machines, especially when the motor is stopped and started frequently. The following explains the main reasons as well as the differences between the single and the multiple time constant models.

By the terms of electrical machine the thermal behavior and time constants varies in between of heating and cooling as well as at certain point within heating and cooling when the loading current is decreased or increased instantly to minimum or maximum. In practice this means that the thermal replica needs to have more settable time constants than one common constant for heating and cooling, as is the case with single time constant objects like cables.

The most common practice is to separate the minimum settable time constants for heating and cooling. The main reason for this is fairly simple: the rotating machine (especially a motor) usually has a cooling fan in the same shaft with its drive, and it cools both the motor and its own surface when the motor is running. Unfortunately, the cooling stops when the motor stops, and the time constant becomes longer as the heat is slower to dissipate into the surrounding air. The cooling time constant (τ_C) may be the same as the heating time constant (τ_h) if the machine has active cooling. Additionally, the starting method (DOL/Soft start/Y-delta) also tells whether there is a need for another time constant (locked rotor, overloading situations) in order to achieve a suitable thermal image for the machine.

The following figure presents the various differences to consider when solve the time constants in the motor (as compared to single time constant objects like cables).

© Arcteq Relays Ltd

Figure. 4.5.34 - 165. Factors affecting the cooling and current-carrying capacity of a cable.

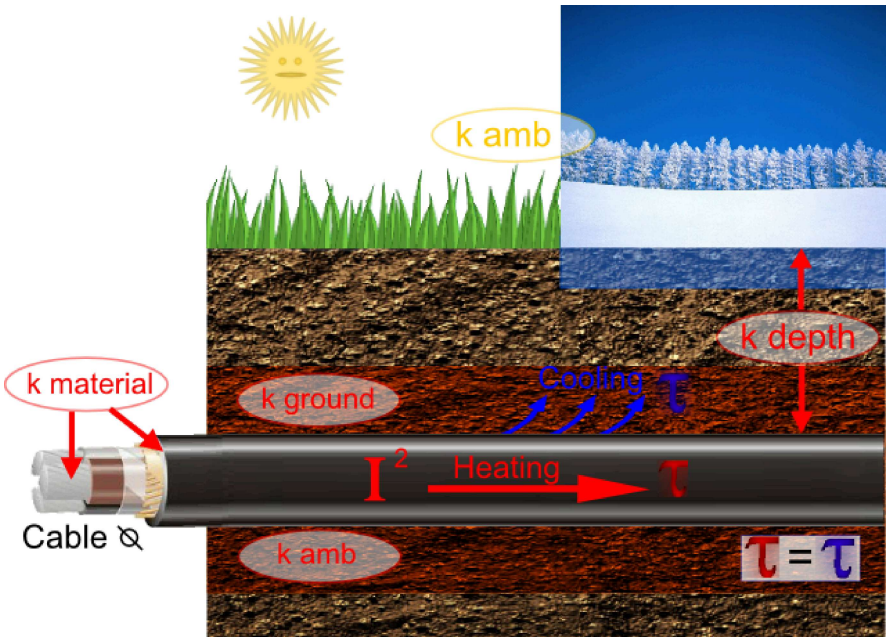

The current-carrying capacity of a cable mostly depends on the conductor's material and its diameter. The second most important factor is the cable's insulating material and how much it can withstand temperature. As can be seen in the image above, all factors (apart from the air temperature) are quite stable, especially when the cable lies below the ground frost limit in places where the outside temperature can dip well below 0 °C. The heat conduction from the cable into the surrounding ground is the same, regardless whether the cable is heating or cooling. The composition of the soil defines how well the ground conducts heat. However, these loading factors only affect the maximum current-carrying capacity of the cable; they are not the cable's time constants. The only time constant to consider is the heating time constant, which is equal to the cooling time constant for underground cables.

Figure. 4.5.34 - 166. Simplified motor construction and time constants.

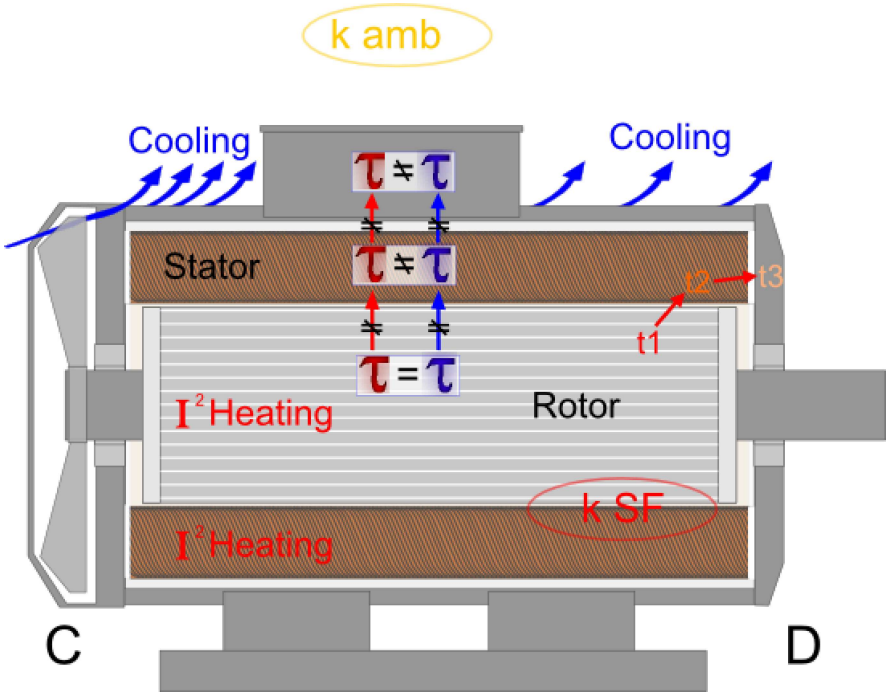

Any normal induction machine such as electric motors have the following major components:

- the rotor: rotates, its shaft used as a power outlet for the motor (drive end),
- the stator: generates the electromagnetic field which induces into the rotor and makes it rotate (hence the name "induction motor"),
- the body: contains the stator and rotor.

Motors always have some kind of a cooling system. The most common cooling system is the rotor's shaft-mounted fan (cooling end). Bigger motors or slowly rotating motors can have additional fans or liquid cooling.

By observing motor thermal properties, one can find several very different components which all have their own thermal time constants. The rotor has a constant that is the same for both heating and cooling ($\tau_h = \tau_c$), the stator has a constant where the heating time constant is different from the cooling constant (τ_h =/= τ_c), and even the motor body has its own time constant for heating and cooling. Keeping the rotor and the stator from being overheated are required for the overall motor protection as it can cause insulator damage in the stator and melt the rotor bars. Both of these faults result in the malfunction of the motor.

When considering the thermal behavior, one can see another fundamental difference between single and multiple time constant objects like cables and electric motors. While the cable loading may vary during the operating conditions, currents higher than the nominal current are not part of the normal usage but always indicate a fault of some sort. Motor with direct-on-line (DOL) starting have a high starting current (up to 6-7 x I_n) and heat generation that are part of its normal operation and happen every time the motor is started. The following figure describes the process of motor heating from the ambient temperature to the nominal temperature with direct-on-line (DOL) starting.

Table. 4.5.34 - 378. Motor heating during DOL starting.

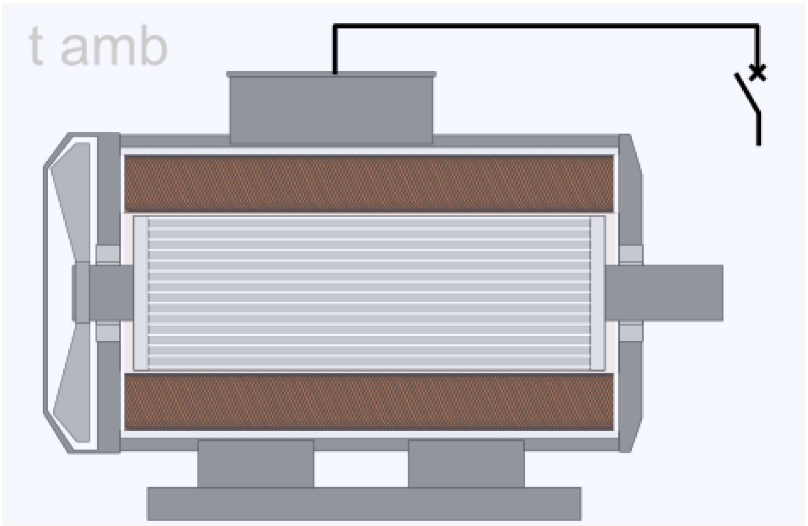	The motor is de-energized and all parts of it are in the ambient temperature.

© Arcteq Relays Ltd

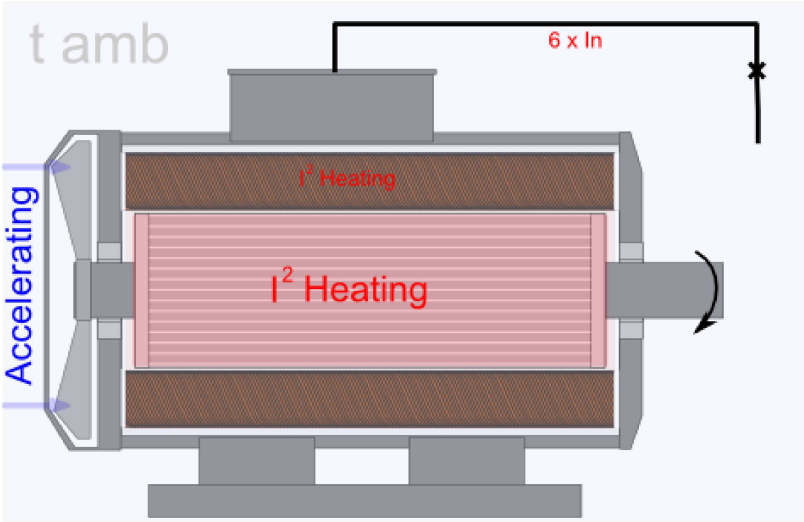

When the motor is energized the stator generates a magnetic field which induces a voltage to the squirrel cage rotor. While the rotor is not yet rotating, the induced voltage and the current it causes are at maximum in the rotor. This is due to the rotating magnetic field in the stator with synchronous speed and the rotors slip now is 1 which causes that the induced voltage to the rotor is maximum and the current is maximum also). The rotor starts to heat up very quickly compared to the stator. When the rotor is speeding up, the difference between the stator's magnetic field rotation and the rotor's magnetic field rotation decreases.

The rotor speeding up leads to the rotor current decreasing, simultaneously decreasing the rotor heating. This also makes the cooling fan start to rotate and thus cool the surface of the motor while the rotor speeds up. Depending on the size of the motor and the masses of the rotor and of the stator, the thermal capacity spent during start-up varies. The motor start-up can be rotor-limited or stator-limited, which defined which of the components limits the maximum start-up time for the motor. Most motors are rotor-limited which results in the rotor heating up to dangerously high temperatures before the stator.

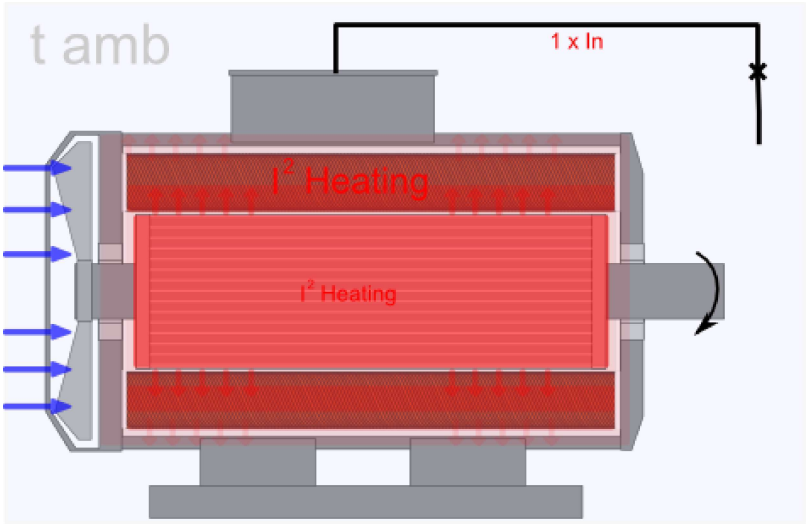	Once the motor has started and is running with or without a load, the heat generation is switched between the rotor and the stator. When the rotor's rotating is within the range of the nominal slip, the magnetic fields of the rotor and the stator "cut" within the nominal designed range and therefore the voltage and the current it causes in the rotor are also within the nominal range. Now, when the motor is loaded or overloaded while still rotating, the generated overheating is only experienced by the stator (unless the load is so big that it stalls the motor and the motor thinks it is back at the start with a non-rotating rotor). The cooling of the motor with a rotor shaft-mounted fan is operational after the starting. Additionally, the stator windings conduct the heat generated in the rotor during starting and into the motor's body. This heat transfer (rotor to stator, stator to body) also depends on the masses of motor's components. In big motors the body can be slightly warm while the rotor and/or stator have completely melted because they have not been able to transfer the heat quickly enough into the body.

Table. 4.5.34 - 379. Motor heating during overloading and motor cooling.

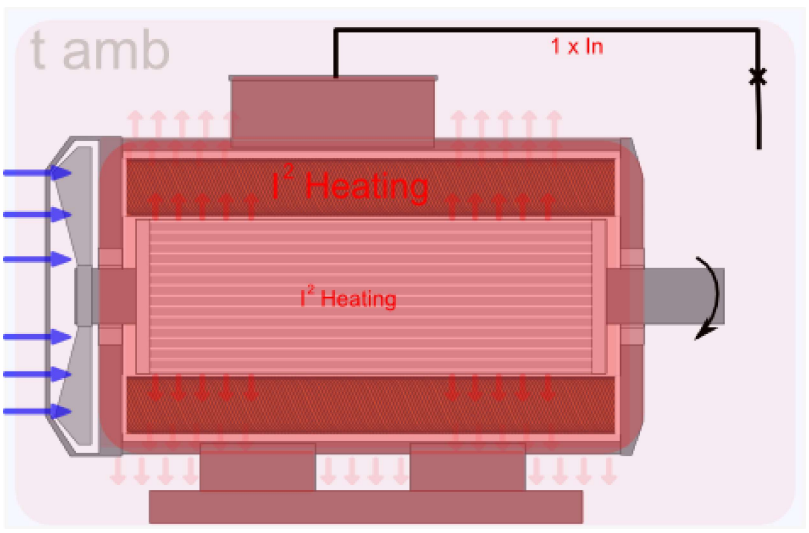	The motor is said to be running in its nominal temperature, when the motor is run with a nominal load, it has enough time for the temperatures to stabilize (5 x time constant) and the final temperatures are reached. Now, the heat transfer is stabilized and the heat generated in the motor is transferred to the surrounding air and the temperatures of the internal components are not increasing any longer.

© Arcteq Relays Ltd

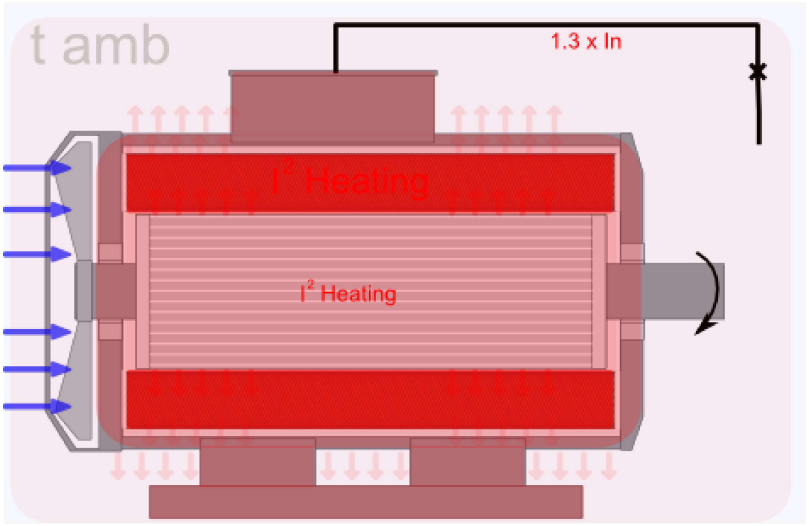

If the motor is overloaded, the stator winding starts to heat up according to its heating time constant. If the overload is not released in time, it can lead to the melting of the stator's winding insulations which in turn leads to a short-circuit; the motor is said to "burn". This situation does not differ much from the rotor's nominal conditions. When the load increases, the slip increases slightly as well and causes a small increase to the induced voltage and current. However, when rotating the heating does not differ significantly from the nominal load.

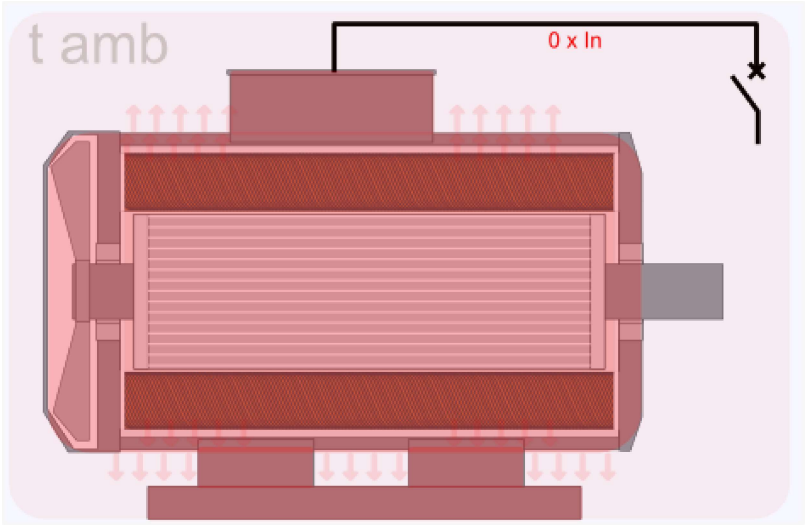

When a hot motor is de-energized the temperatures inside the motor start to stabilize. The hottest part of the motor is the rotor: its heat is transferred to the motor body through the stator windings and from the body to the surrounding air. This is why it seems that the motor body's temperature keeps rising even after a surface-cooled motor is stopped. The stopped motor cooling follows the same equation than heating, with one exception: when the surrounding air is not moving (as the fan has stopped) and the air temperature is increasing, the cooling is faster in the beginning and slows over time as the temperature difference decreases (since heat is transferred slower than in the beginning of the cooling). When the motor is run with a cyclic load, the start and stop applications for the cooling of the motor have to be modeled accurately in the thermal replica in order to avoid a situation where the calculated used thermal capacity "runs" from the actual used thermal capacity causing the protection to overshoot significantly.

The previous figures presented the thermal behavior of a motor on a theoretical level. In reality, the temperature of a rotor inside the motor windings can also be measured with RTD elements. The rotor temperature is highest on the drive end becuase the cooling is the weakest there (as can be seen in the image below).

Figure. 4.5.34 - 167. Running motor's temperature with thermal image camera.

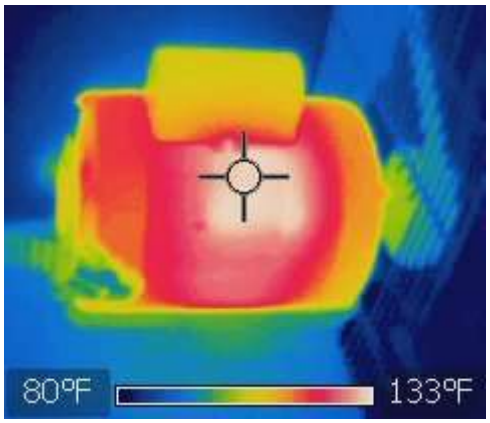

Measuring the rotor's temperature is very complicated due to its rotating nature. This is why normally there are no measurements available and why the protection of the rotor always requires a calculated thermal image. Relying solely on the measurements from RTDs installed in the motor's stator windings is not recommended as they mey not be in the actual hot spot and thus give false readings. For these reasons motor protection should not be either thermal images or RTDs but rather a combination of them both for accurate monitoring of the motor's temperature.

Thermal image modeling in protection devices require certain things to be ensured for the model to correctly match the motor thermal behavior. As was seen in the previous section, a motor usually has many states which differ from one another in terms of heating and of the parts in danger of damage. Sometimes the thermal image needs to be adjusted and fine-tuned for the application so that it matches the motor's actual temperature perfectly. This is why the thermal replica needs to offer enough setting points for various situations where the motor may be running at that time. The device needs to recognize these situations so that the thermal model can be updated correctly.

Thermal image characteristics and operating modes

To demonstrate the various settings available in the thermal image, the following figure presents the data from a field test: a motor was loaded with a stable load, run until the final temperature was reached and then de-energized and left to cool. The motor temperature was monitored with RTDs installed into the drive end of the protection device. The motor was loaded with a nominal current, its service factor was 1.15 and the ambient temperature was measured to be 24 degrees Celsius. In this case the motor was started without a load, and the loading was increased directly after starting in order to concentrate the heating effects of stable loading.

© Arcteq Relays Ltd

Figure. 4.5.34 - 168. Measured motor temperature in heating/cooling test.

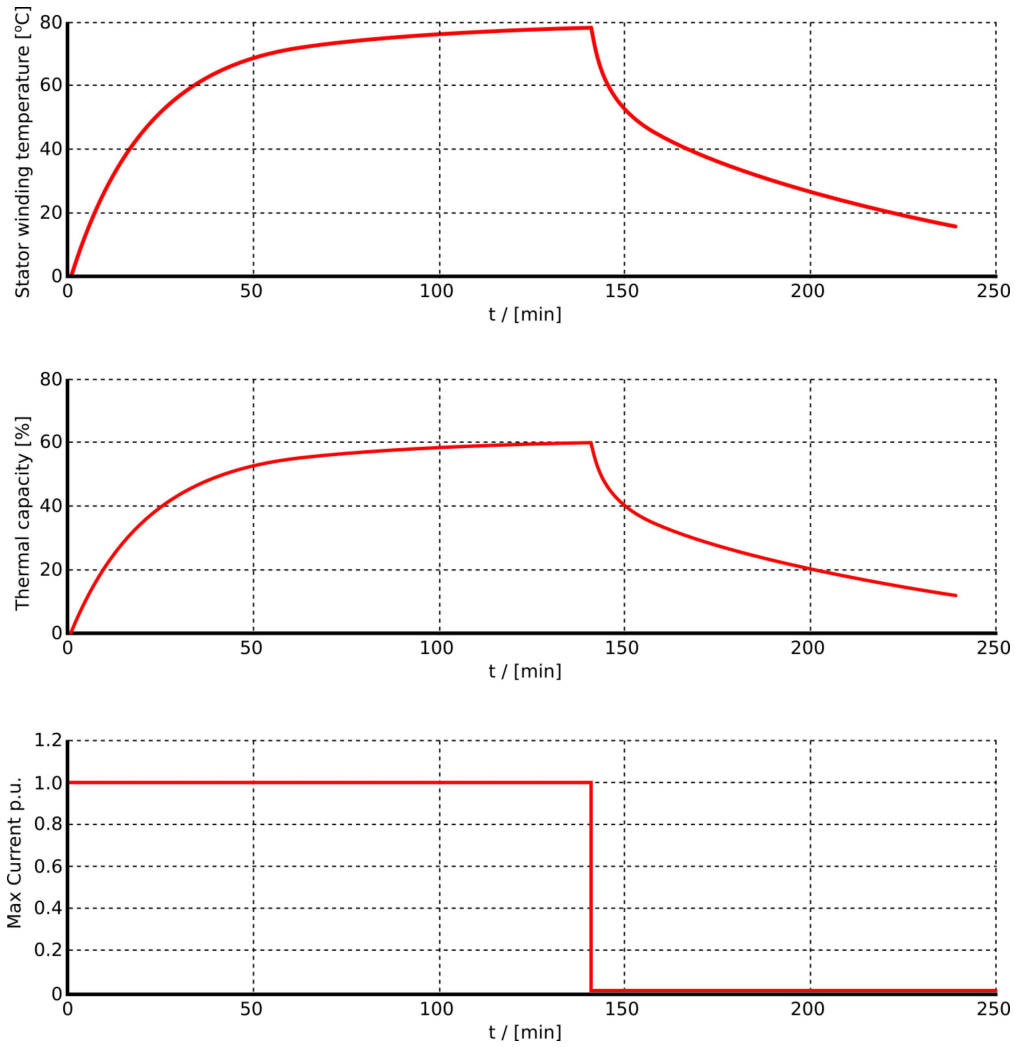

Figure. 4.5.34 - 169. Matching thermal replicas to the measured thermal capacity of the motor.

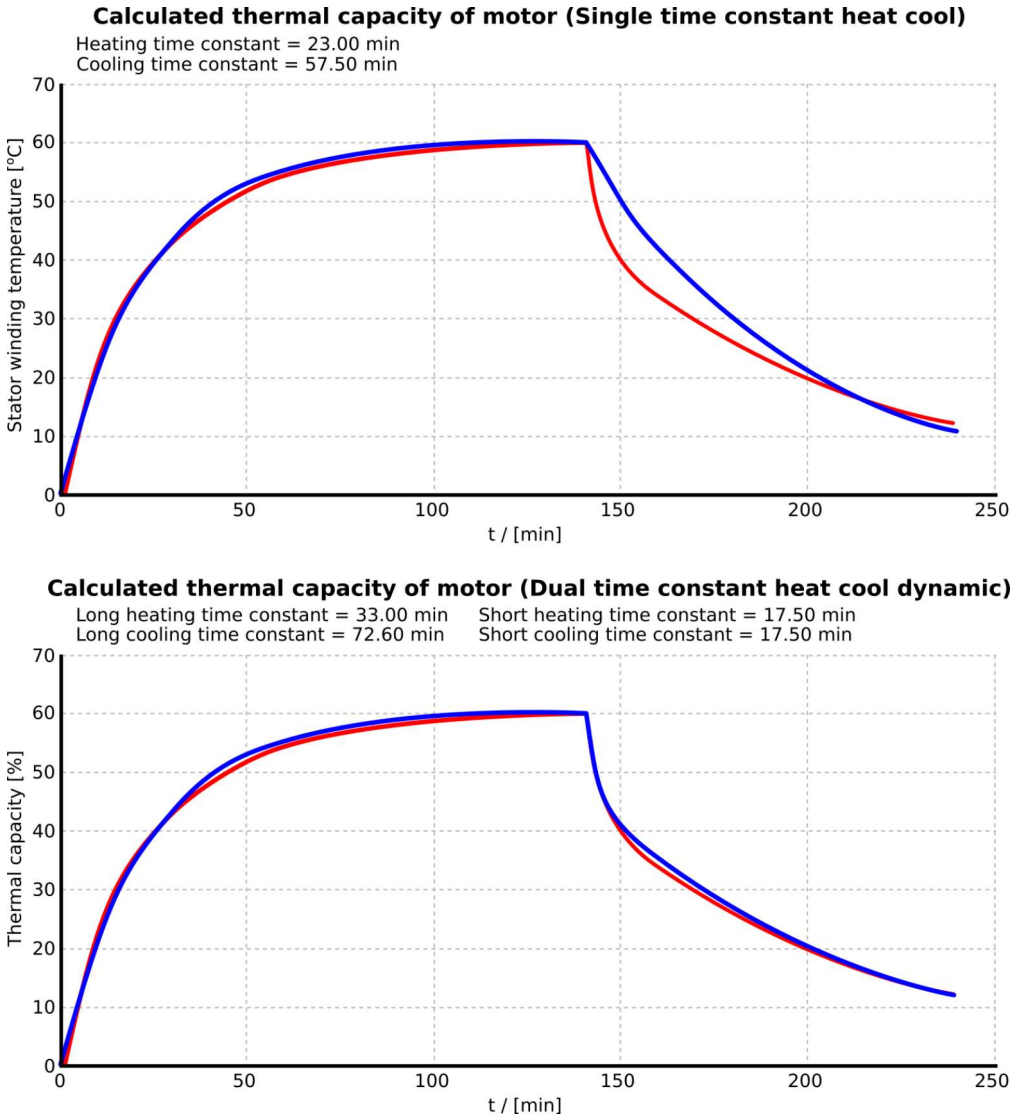

As can be seen in the figures above, when the motor is loaded with a constant current both of the replicas (single and dual time constant) follow the motor heating quite accurately. The operational difference is during cooling. With a single cooling time constant the replica does not follow the actual cooling of the motor and the match can be said to be very poor. With dynamically-controlled cooling time constants the match is very accurate. If this motor were used for cyclic loads with repeating cooling times, the single time constant model would stretch into the next duty cycle and probably cause unnecessary alarms or even trips eventhough the motor were till running in safe temperatures.

Thermal trip curves

Motor thermal curves are useful when studying motor heating in possible overload and start-up situations. These are usually available upon request from manufacturers, and the function operation can be set according to these.

© Arcteq Relays Ltd

Figure. 4.5.34 - 170. Example of thermal limit curves in a motor.

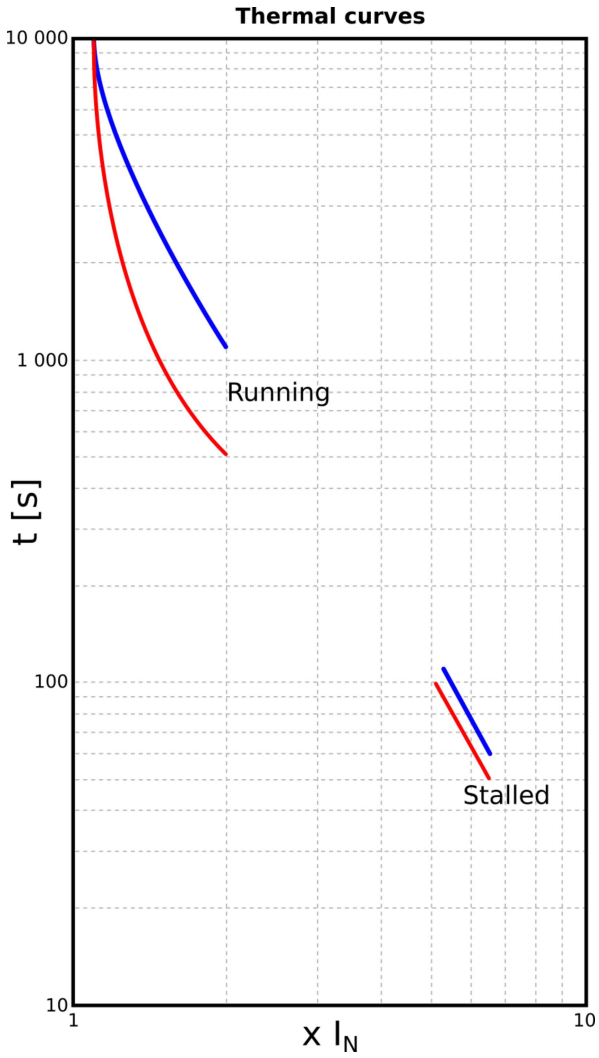

From motor thermal limit curves –if available– one can see the time constants for overloading as well as the safe stall times for hot and cold situations. Additionally, the cooling time constant must be checked from the motor datasheet or alternatively measured. From the image above one can estimate the safe stall time in cold situations to be approximately 80 seconds, and in hot situation approximately 67 seconds. When the thermal limit curves are available, the operation of the thermal replica can be set very accurately for both overloading and stall conditions.

The cooling time constant as presented in the previous example is very crucial in the case of variable duty cycle motor applications. If the motor is continuously running with a constant load, the cooling time constant is not that significant and can be estimated to be e.g. two to three times longer than the heating time constant.

Figure. 4.5.34 - 171. Comparing single time constant thermal replica tripping curves to given motor thermal characteristics.

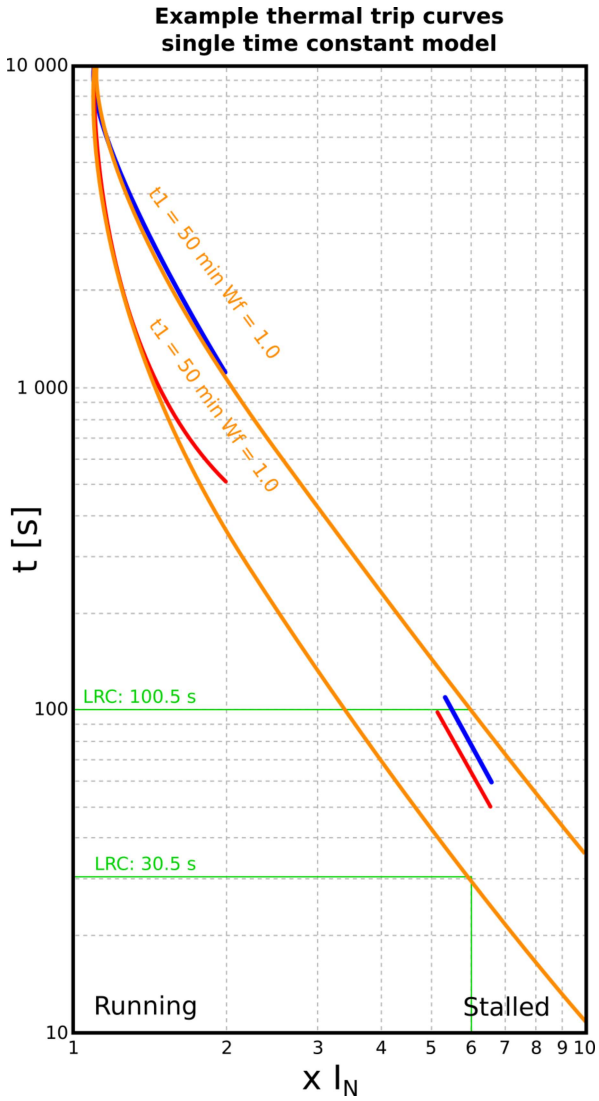

© Arcteq Relays Ltd

Figure. 4.5.34 - 172. Comparing dual time constant thermal replica tripping curves to given motor thermal characteristics.

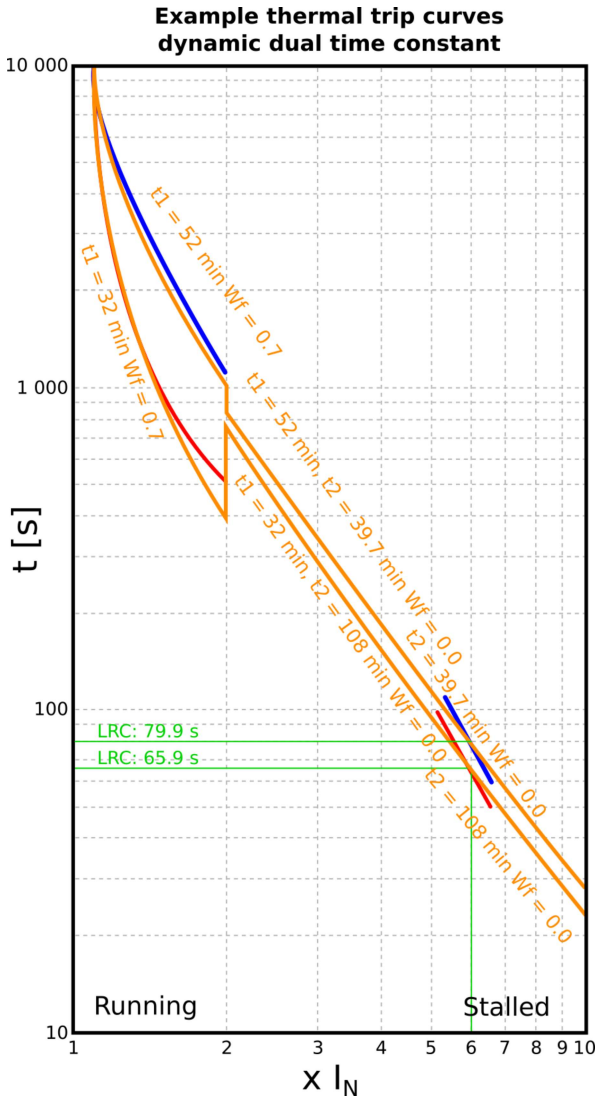

As the figures above have shown, with estimated time constants from the motor thermal limit curves the single time constant model underprotects the motor in the stall condition when the motor is cold. When the motor is hot the model overprotects with a heavy hand, allowing the motor only 30.5 seconds of stalling time of the approximately 67 seconds the motor can withstand. When dual time constants and dynamic time constants are in use, the function automatically selects the correct tripping curves for the thermal replica according to the settings, producing therefore an exact thermal image response (as compared to the single time constant thermal image). In overload conditions the response from both of the thermal replicas is acceptable as even a small overshoot is noticed when the motor is hot. In the curve simulations the hot condition was defined as 70 % of the thermal capacity.

The following figures present the tripping and cooling curves of the thermal replica.

Figure. 4.5.34 - 173. Thermal tripping curves with single time constant, pre-load 0% (cold).

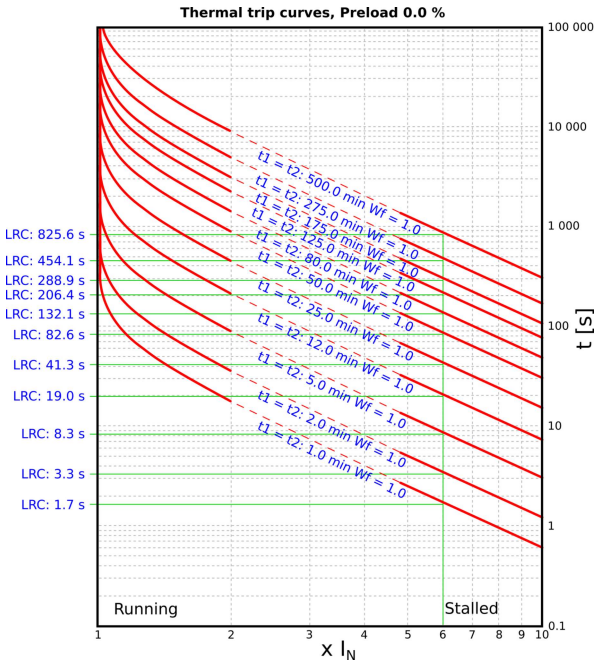

Figure. 4.5.34 - 174. Thermal tripping curves with single time constant, pre-load 90% (hot).

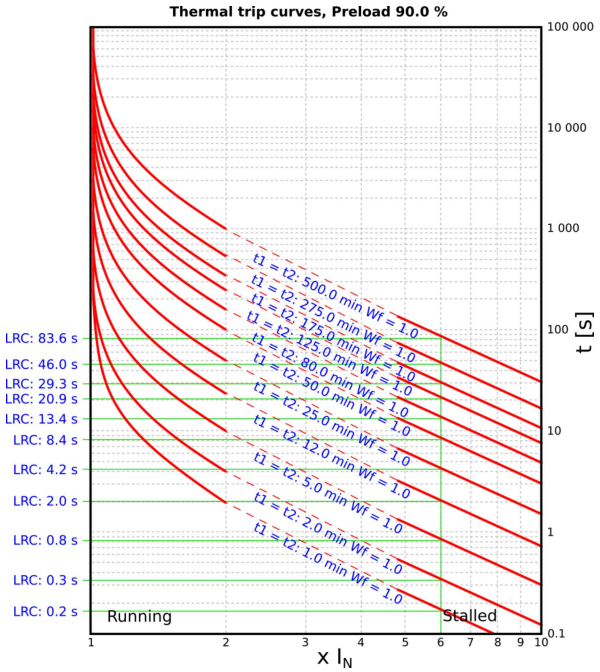

© Arcteq Relays Ltd
IM00099

Figure. 4.5.34 - 175. Thermal tripping curves with dual dynamic time constants and correction factor, pre-load 0% (cold)

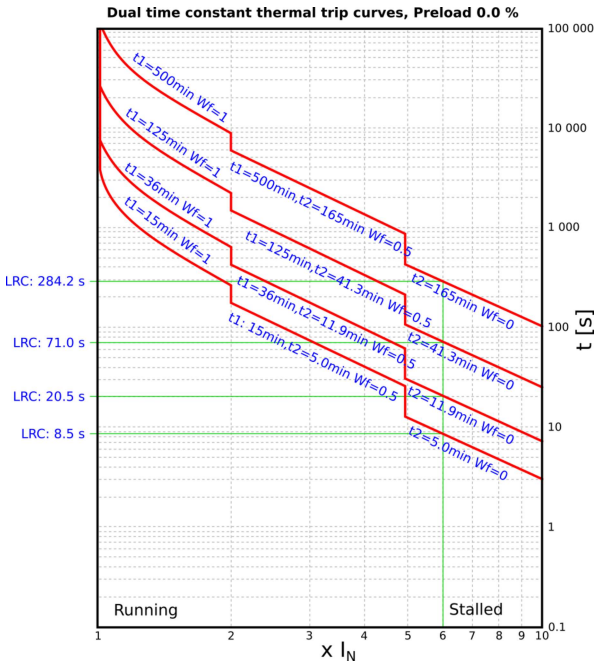

Figure. 4.5.34 - 176. Thermal tripping curves with dual dynamic time constants and correction factor, pre-load 90% (hot).

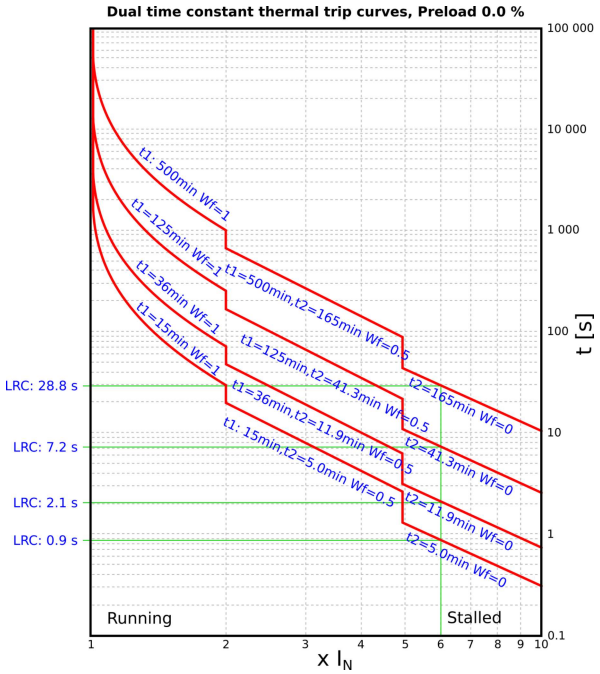

Figure. 4.5.34 - 177. Thermal cooling curves, single cooling time constant.

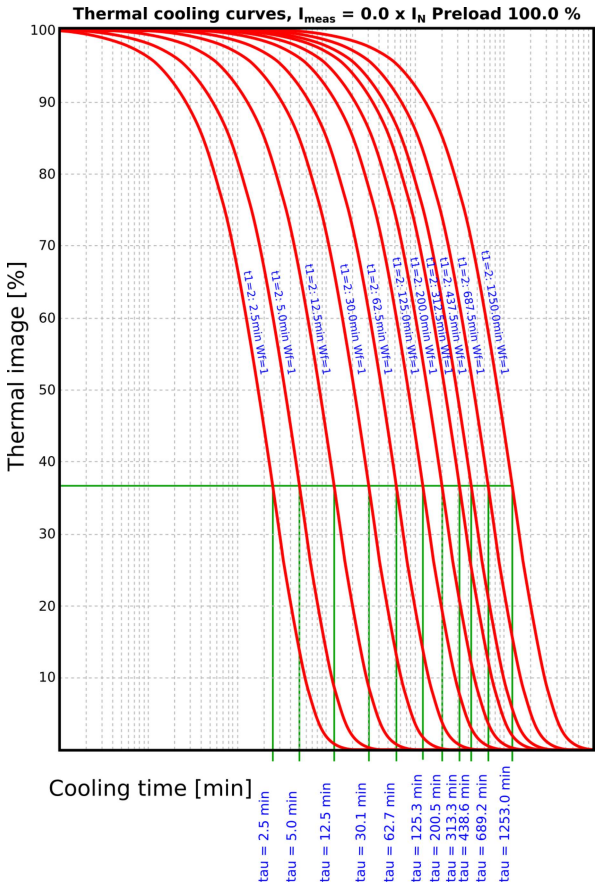

© Arcteq Relays Ltd

Figure. 4.5.34 - 178. Thermal cooling curves, dynamic dual time constant.

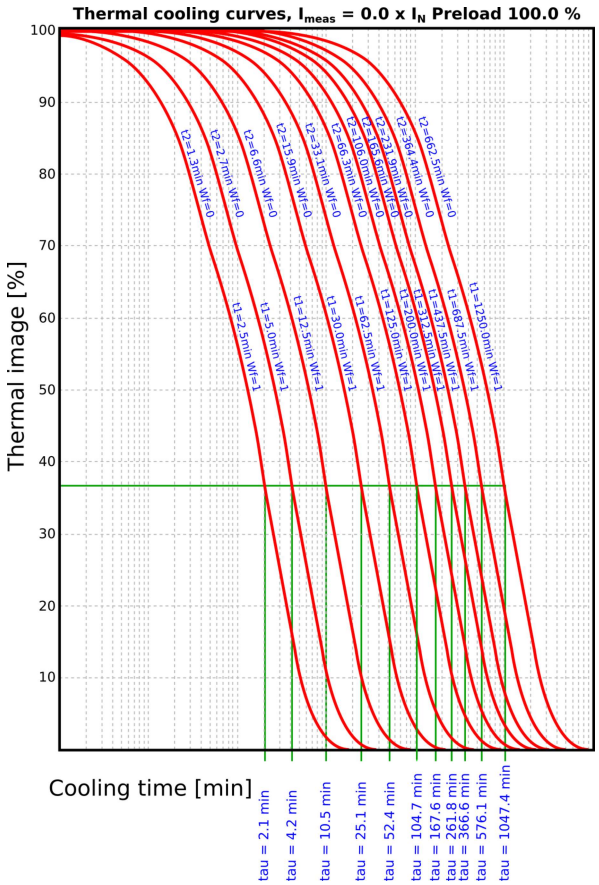

Figure. 4.5.34 - 179. Thermal cooling curves, dynamic triple time constant (motor is running without load in the first part with dedicated time constant).

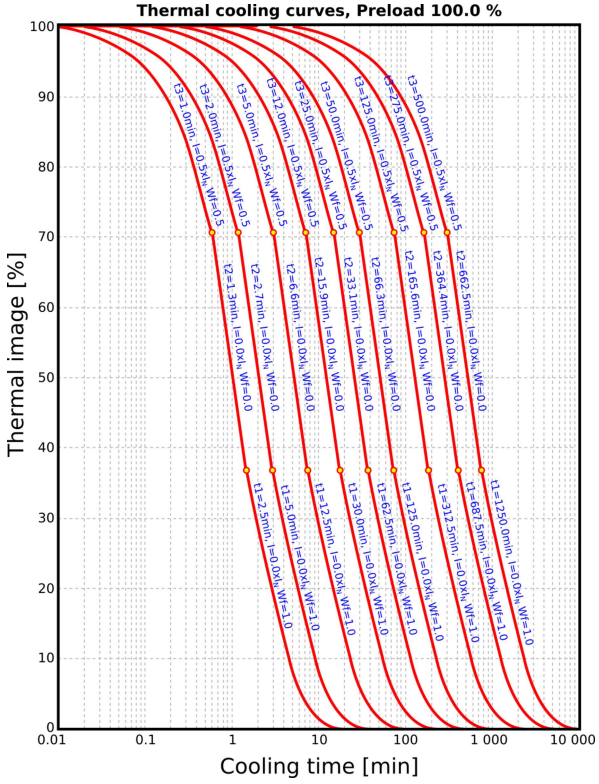

Figure. 4.5.34 - 180. NPS-biased thermal trip curves with k_{NPS} value of 1.

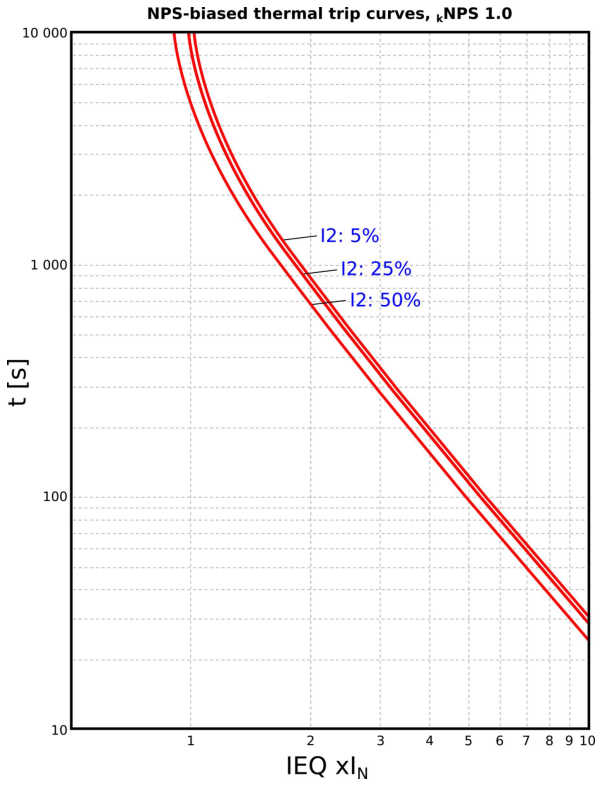

Figure. 4.5.34 - 181. NPS-biased thermal trip curves with k_{NPS} value of 3.

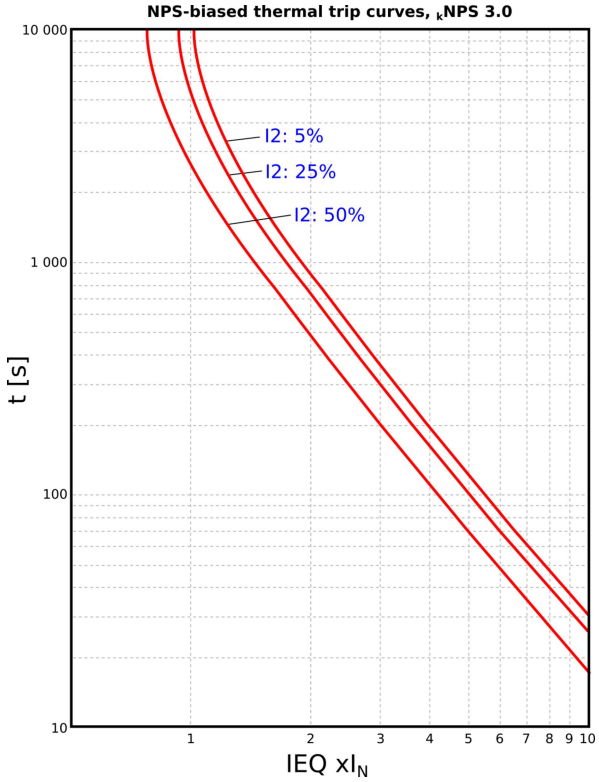

© Arcteq Relays Ltd

Figure. 4.5.34 - 182. NPS-biased thermal trip curves with k_{NPS} value of 7.

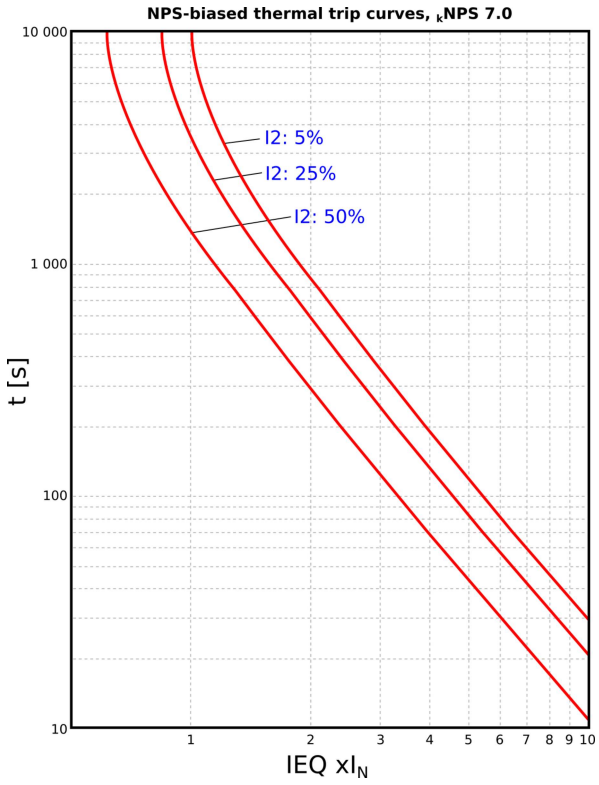

Figure. 4.5.34 - 183. NPS-biased thermal trip curves with k_{NPS} value of 10.

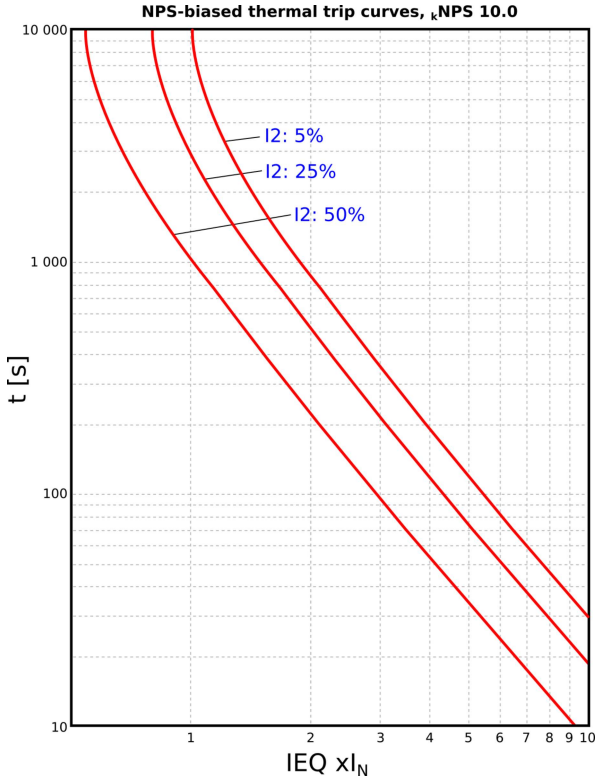

Function inputs and outputs

The blocking signal and the setting group selection control the operating characteristics of the function, i.e. the user or user-defined logic can change function parameters while the function is running. The function has a total of eight (8) setting groups available.

Measured input

The function block uses phase current measurement values. The function block uses TRMS values from the whole harmonic specter of 32 components. RTD measurement can be used for measuring the ambient temperature.

Table. 4.5.34 - 380. Measurement inputs of the TM> function.

Signal	Description
I_{L1}TRMS	TRMS measurement of phase L1 (A) current
I_{L2}TRMS	TRMS measurement of phase L2 (B) current
I_{L3}TRMS	TRMS measurement of phase L3 (C) current
RTD	Temperature measurement for the ambient correction

Setting parameters

Table. 4.5.34 - 381. General settings (not selectable under setting groups)

Name	Range	Default	Description
TM> LN mode	• On • Blocked • Test • Test/ Blocked • Off	On	Displays the mode of TOLM block. This parameter is visible only when *Allow setting of individual LN mode* is enabled in *General* menu.
TM> mode	• Disabled • Activated	Disabled	The selection of the function is activated or disabled in the configuration. By default it is not in use.
TM> Status Force to	• Normal • Blocked • Alarm1 On • Alarm2 On • Inhibit On • Trip On	Normal	Force the status of the function. Visible only when *Enable stage forcing* parameter is enabled in *General* menu.
Temp C or F deg	• C • F	C	The selection of whether the temperature values of the thermal image and RTD compensation are shown in Celsius or in Fahrenheit.

© Arcteq Relays Ltd

Table. 4.5.34 - 382. Settings of the motor status monitoring function and how they are shared by other protection functions.

Name	Range	Step	Default	Description
Motor In Scaled	0.1...40.0xI_n	0.1xI_n	-	The motor's nominal current scaled to per unit. If the user selects *Object In* in the CT settings, this value should be 1.00. If scaled to the CT nominal, this value may vary.
Motor In A	0.1 ... 5000.0A	0.1A	-	The motor's nominal current in amperes.
Nominal starting current	0.1…40.0xI_n	0.1xI_n	6.0xI_n	The motor's locked rotor current with the nominal voltage. This setting is used for automatic curve selection and calculation. Also, the nominal starting capacity calculation is based on this value.
Nominal starting current A	0.1...5000.0A	0.1A	-	The motor's locked rotor current in amperes.
Min locked rotor current	0.1…40.0xI_n	0.1xI_n	3.5xI_n	The motor's minimum locked rotor current. This setting defines the current limit for when this current is exceeded while the automatic curve selection and the control only short time constant (stall) are in use.
Min locked rotor current A	0.1...5000.0A	0.1A	-	The motor's minimum locked rotor current. This setting defines the current limit for when this current is exceeded while the automatic curve selection and the control only short time constant (stall) are in use.
Max locked rotor current	0.1…40.0xI_n	0.1xI_n	7.5xI_n	The maximum locked rotor current of the motor. This setting defines the current limit which is maximum current for the motor to draw in locked rotor situation (starting or stalled). If the measured current exceeds this setting limit it is considered to be overcurrent fault and corresponding measures can be applied to disconnect the feeder and motor from the supply.
Max locked rotor current A	0.1...5000.0A	0.1A	-	The maximum locked rotor current in amperes.
Max overload current	0.1…40.0xI_n	0.1xI_n	2.0xI_n	The motor's maximum overload current. Exceeding this setting stalls the motor. This setting defines when the thermal replica switches to the short (stall) time constant. As long as the current stays below this setting value, the motor should run even when overloaded.
Max overload current A	0.1...5000.0A	0.1A	-	The maximum overload current of the motor in amperes.
No load current <	0.1…40.0xI_n	0.1xI_n	0.2xI_n	The motor's no load current. This setting defines the "Stopped" condition when the current is below this setting value. Also, when the current is below this value, the undercurrent protection stage is locked.

Name	Range	Step	Default	Description
No load current < A	0.1...5000.0A	0.1A	-	The motor's no load current in amperes.
Motor service factor	0.01…5.00xI_n	0.01xI_n	1.00xI_n	Service factor which corrects the maximum allowed loading according to various conditions (e.g. installation, construction, etc.) which vary from the presumption conditions. Frequently motors are stamped to a service factor of 1.15: this means that they can withstand a continuous 15% overloading from the rated current (as this is not necessary in all conditions, it is recommended to consult the motor's datasheet or manual for details). If the service factor is not known, this parameter should be left at its default setting of 1.00 x I_n.
Hot condition theta limit	0.0…100.0%	0.1%	70%	Setting the thermal limit for a hot motor and a cold motor. When this setting value is not exceeded while a locked rotor situation occurs, the function uses a cold stall curve adjusted with the actually used thermal capacity. The function uses a hot stall curve when this setting value is exceeded. This also applies to starts when the motor is hot or cold. Please note that using this setting requires that the Machine thermal overload protection (TM>) function is activated and in use.
Safe stall time cold	0.1…600.0s	0.1s	20.0s	The safe stall time when the motor is cold. Unless this value is specified, it is set to be equal to the hot stall time. Most probably this leads to overprotection with the cold motor stall (best case scenario). This setting value is used for the cold thermal stall curve selection in automatic control. This parameter is also used in the motor start-up and the number of starts calculations.
Safe stall time hot	0.1…600.0s	0.1s	15.0s	The safe stall time when the motor is hot. This setting value is used for the hot thermal stall curve selection in automatic control. This parameter is also used in the motor start-up and the number of starts calculations.

Table. 4.5.34 - 383. Motor's thermal image settings.

Name	Range	Step	Default	Description
Pick-up current	0.00…40.00xI_n	0.01xI_n	1.00xI_n	The current for 100 % thermal capacity to be used (the pick-up current in p.u., this current t_{max} achieved in t x 5).
NPS-biasing in use	• No NPS-biasing • NPS-biasing in use	-	No NPS-biasing in use	The selection of whether or not the thermal replica reference current is biased with the NPS current.
NPS-bias factor	0.1…10.0	0.1	3.0	The negative sequence current biasing factor. This factor depends on the motor's construction and is in relation to the positive and negative sequence rotor resistances. A typical value for this is the default setting 3.0.
Time constants	• Single • Multiple	-	Single	The selection of whether the thermal replica uses single or multiple heating and cooling time constants. If "Single" is selected, only the time constants Long heating (cold) and Long cool Stop are shown. If "Multiple" is selected, all available time constants are shown.

© Arcteq Relays Ltd

Name	Range	Step	Default	Description
Estimate short TC and timings	• Set manually • Estimate (online)	-	Set manually	The selection of whether the function estimates short time constants for heating and cooling. It also selects the timing for short and long time constants when the motor is stopped.
Long heat T const (cold)	0…500.0min	1.0min	10.0min	The setting for the long heating time constant. This setting is for "Cold" motor conditions and is used when the calculated thermal capacity is below the set value for "Hot condition theta limit".
Long heat T const (hot)	0…500.0min	1.0min	10.0min	The setting for the long heating time constant. This setting is for "Hot" motor conditions and is used when the calculated thermal capacity is above the set value for "Hot condition theta limit". This setting can be modified for when the motor's thermal characteristics vary between "hot" and "cold" situation. If the characteristics do not change, this setting should be the same as the setting value of "Long heat T const (cold)". This setting is visible when the time constant option "Multiple" is selected.
Long cool T const Run	0…3000.0min	1.0min	10.0min	The setting for the long cooling time constant for the "Run" condition of the motor. When the motor cools while running, its time constant is not the same as the stopped cooling constant but instead typically a lot shorter (since the motor cooling fan is active). This setting may need the testing of the motor cooling characteristics. If unknown, this setting should be the same as the setting value of "Long Cool T const Stop" (slower cooling) or "Long heat T const" (faster cooling). This setting is visible when the time constant option "Multiple" is selected.
Long cool T const Stop	0…3000.0min	1.0min	10.0min	The setting for the stopped motor cooling time constant. When the motor is stopped, the thermal replica calculates the cooling according to this setting value. Typically this time constant is about 2.5 – 3.5 times the heating time constant.
Short heat T const (cold)	0…500.0min	1.0min	10.0min	The setting for short heating time constant for "cold" motor status. This time constant defines the locked rotor and stalled tripping curve selection. While this setting is not the safe stall time directly, it defines the used tripping curve for the locked rotor condition. This setting is visible when the time constants option "Multiple" and the "Set manually" option from "Estimate short TC and timings" are both selected.
Short heat T const (cold) est	0…500.0min	1.0min	10.0min	The estimated setting for short heating time constant for "cold" motor status. This time constant defines the locked rotor and stalled tripping curve selection. This setting value is calculated based on the information given by the locked rotor current (LRC) and the cold safe stall time. This setting value is visible when the time constants option "Multiple" and the "Estimate" option from "Estimate short TC and timings" are both selected.
Short heat T const (hot)	0…500.0min	1.0min	10.0min	The setting for short heating time constant for "hot" motor status. This time constant defines the locked rotor and stalled tripping curve selection. While this setting is not the safe stall time directly, it defines the used tripping curve for the locked rotor condition. This setting is visible when the time constants option "Multiple" and the "Set manually" option from "Estimate short TC and timings" are both selected.

Name	Range	Step	Default	Description
Short heat T const (hot) est	0…500.0min	1.0min	10.0min	The estimated setting for short heating time constant for "hot" motor status. This time constant defines the locked rotor and stalled tripping curve selection. This setting value is calculated based on the information given by the LRC and the hot safe stall time. This setting value is visible when the time constants option "Multiple" and the "Estimate" option from "Estimate short TC and timings" are both selected.
Short cool T const	0…3000.0min	1.0min	10.0min	The setting for the short cooling time constant. This value is the same for both running and stopped conditions, and typically it is the same between heating and cooling. This setting is visible when the time constants option "Multiple" and the "Set manually" option from "Estimate short TC and timings" are both selected.
Wf factor for L/S T const	0.0…1.0	0.1	0.5	The correction factor between the currently used long and short time constants. With this setting the heating and cooling calculations can be fine-tuned. A setting value of 0.5 means that 50 % of the heating or cooling calculation is based on the long time constant and another 50 % is based on the short time constant. A setting value of 0.0 means the calculation is completely based on the short time constant, while a value of 1.0 means it its completely based on the long time constant. This setting value is visible when the time constants option "Multiple" is selected.
T const dyn. balancing	• Fixed • Dynamic	-	Fixed	The selection of whether or not the thermal replica balances and switches the time constants dynamically based on the detected motor status. The switching is based on the settings given for maximum overload current and for minimum locked rotor current. If "Dynamic" is selected, the thermal replica switches the time constants. If "Fixed" is selected, no time constants are switched. This setting value is visible when the time constants option "Multiple" is selected.
Short cool T used when stop	0.0...3000min	0.1min	30.0min	The setting for how long the short cooling time constant is used when the motor is stopped. The cooling is typically faster in right after the motor has stopped. This setting may need adjusting depending on the application for a perfect match. This setting value is visible when the time constansts option "Multiple" is selected.
Short cool T used when stop (est)	0.0...3000min	0.1min	30.0min	The estimated setting for how long the short cooling time constant is used when the motor is stopped. The cooling is typically faster right after the motor has stopped. This setting value is visible when the time constansts option "Multiple" is selected.
Cold reset default theta	0.0…150.0%	0.1%	60.0%	The default theta when the function is restarted. It is also possible to fully reset the thermal element. This parameter can be used when testing the function to manually set the current thermal cap to any value.

© Arcteq Relays Ltd

Table. 4.5.34 - 384. Environmental settings

Name	Range	Step	Default	Description
Dev. temp (tmax)	• A • B • F • H • Manual set	-	F	The maximum allowed temperature for the protected object. The default setting is "F" which is +155 °C.
Obj. max. temp (tmax = 100 %)	0…500 deg	1 deg	125 deg	Visible when the Dev. temp. (tmax) is set to "4: Manual set".
Ambient temp. sel.	• Manual set • RTD	-	Manual set	The selection of whether the thermal image biasing uses a fixed or a measured ambient temperature.
Man. amb. temp. set.	0…500 deg	1 deg	40 deg	The manual fixed ambient temperature setting for thermal image biasing. Underground cables commonly use +15 °C. This setting is visible if "Ambient temp. sel." is set to "Manual set".
RTD amb. temp. read.	0…500 deg	1 deg	40 deg	The RTD ambient temperature reading for the thermal image biasing. This setting is visible if "Ambient temp. sel." is set to "RTD".
Ambient lin. or curve	• Linear est. • Set curve	-	Linear est	The selection of how to correct the ambient temperature, either by internally calculated compensation based on end temperatures or by a user-settable curve. The default setting is "Linear est." which means the internally calculated correction for ambient temperature.
Temp. reference (tref) k_{amb} = 1.0	-60…500 deg	1 deg	15 deg	The temperature reference setting. The manufacturer's temperature presumptions apply and the thermal correction factor is 1.00 (rated temperature). For underground cables the set value for this is usually 15 °C and for cables in the air it is usually 25 °C. This setting is visible if "Ambient lin. or curve" is set to "Linear est."
Max. ambient temp.	0…500 deg	1 deg	45 deg	The maximum ambient temperature setting. If the measured temperature is more than the maximum set temperature, the set correction factor for the maximum temperature is used. This setting is visible if "Ambient lin. or curve" is set to "Linear est."
k at max. amb. temp.	0.01…5.00 x I_n	0.01 x I_n	1.00 x I_n	The temperature correction factor for the maximum ambient temperature setting. This setting is visible if "Ambient lin. or curve" is set to "Linear est."
Min. ambient temp.	-60…500 deg	1 deg	0 deg	The minimum ambient temperature setting. If the measured temperature is below the minimum set temperature, the set correction factor for minimum temperature is used. This setting is visible if "Ambient lin. or curve" is set to "Linear est."
k at min. amb. temp.	0.01…5.00 x I_n	0.01 x I_n	1.00 x I_n	The temperature correction factor for the minimum ambient temperature setting. This setting is visible if "Ambient lin. or curve" is set to "Linear est."
Amb. temp. ref. 1...10	-50.0…500.0 deg	0.1 deg	15 deg	The temperature reference points for the user-settable ambient temperature coefficient curve. This setting is visible if "Ambient lin. or curve" is set to "Set curve".

Name	Range	Step	Default	Description
Amb. temp. k1...k10	0.01…5.00	1.00	0.01	The coefficient value for the temperature reference point. The coefficient and temperature reference points must be set as pairs. This setting is visible if "Ambient lin. or curve" is set to "Set curve".
Add curvepoint 3…10	• Not used • Used	-	Not used	The selection of whether or not the curve temperature/coefficient pair is in use. The minimum number to be set for the temperature/ coefficient curve is two pairs and the maximum is ten pairs. If the measured temperature is below the set minimum temperature reference or above the maximum set temperature reference, the used temperature coefficient is the first or last value in the set curve. This setting is visible if "Ambient lin. or curve" is set to "Set curve".

Operating characteristics

The operating characteristics of the machine thermal overload protection function are completely controlled by the thermal image. The thermal capacity value calculated from the thermal image can set the I/O controls with ALARM 1, ALARM 2, INHIBIT and TRIP signals.

Table. 4.5.34 - 385. Pick-up settings.

Name	Range	Step	Default	Description
Enable TM> Alarm 1	• Disabled • Enabled	-	Disabled	Enabling/disabling the ALARM 1 signal.
TM> Alarm 1 level	0.0…150.0 %	0.1 %	40 %	ALARM 1 activation threshold.
Enable TM> Alarm 2	• Disabled • Enabled	-	Disabled	Enabling/disabling the ALARM 2 signal.
TM> Alarm 2 level	0.0…150.0 %	0.1 %	40 %	ALARM 2 activation threshold.
Enable TM> Trip	• Disabled • Enabled	-	Enabled	Enabling/disabling the Trip signal.
Enable TM> Rest Inhibit	• Disabled • Enabled	-	Disabled	Enabling/disabling the INHIBIT signal.
TM> Inhibit level	0.0…150.0 %	0.1 %	80 %	INHIBIT activation threshold.
TM> Trip level	0.0…150.0 %	0.1 %	100 %	TRIP activation threshold. This parameter is only visible when "Enable TM> Trip" is Enabled.

© Arcteq Relays Ltd

Name	Range	Step	Default	Description
TM> Trip delay	0.000…3600.000 s	0.005 s	0.000 s	The trip signal's additional delay. This delay delays the trip signal generation by a set time. The default setting is 0.000 s which does not give an added time delay for the trip signal. This parameter is only visible when "Enable TM> Trip" is Enabled.

Function blocking

The blocking signal is evaluated at the start of each program cycle. The blocking signals are connected to the function's dedicated input, which can be configured in the *IO → Blocking Input Control* tab of the function.

- When the pick-up element activates and the blocking signal is not active, a START signal is generated, and the function starts or continues with the trip time countdown.
- When the pick-up element activates and the blocking signal is active, a BLOCKED signal is generated, and the function does not process the event further.
- When a START signal is already active and the blocking input signal becomes active, the START signal is reset and BLOCKED signal is generated. The release time characteristics are then processed in the same way as when the pick-up signal is reset.

The blocking signal needs to reach the device minimum of 5 ms before the set operating delay has passed in order for the blocking to activate in time.

Measurements and indications

The function outputs measured process data from the following magnitudes:

Table. 4.5.34 - 386. General status codes.

Name	Range	Description
TM> LN behaviour	• On • Blocked • Test • Test/ Blocked • Off	Displays the mode of TOLM block. This parameter is visible only when *Allow setting of individual LN mode* is enabled in *General* menu.
TM> Condition	• Normal • Alarm 1 ON • Alarm 2 ON • Inhibit ON • Trip ON • Blocked	The function's operating condition. No outputs are controlled when the status is "Normal".
Motor status	• Stopped • Stalled • Just Stopped • Overloading • Running normal	The function's thermal image status. When the measured current is below 1 % of the nominal current, the status "Light/No load" is shown. When the measured current is below the trip limit, the status "Load normal" is shown. When the measured current is above the pick-up limit but below 2 x I_n , the status "Overloading" is shown. When the measured current is above 2 x I_n, the status "High overload" is shown.

Name	Range	Description
TM> Setting alarm	• SF setting ok • Service factor set fault. Override to 1.0	Indicates if SF setting has been set wrong and the actually used setting is 1.0. Visible only when there is a setting fault.
TM> Setting alarm	• Ambient setting ok • Ambient t set fault. Override to 1.0	Indicates if ambient temperature settings have been set wrong and actually used setting is 1.0. Visible only when there is a setting fault.
TM> Setting alarm	• Nominal current calc ok • Nominal current set fault. Override to 1.0	Indicates if nominal current calculation is set wrong and actually used setting is 1.0. Visible only when there is a setting fault.
TM> Setting alarm	• Ambient setting ok • Inconsistent setting of ambient k	Indicates if ambient k setting has been set wrong. Visible only when there is a setting fault.

Table. 4.5.34 - 387. Measurements.

Name	Range	Description / values
Currents	• Primary A • Secondary A • Per unit	The active phase current measurement from IL1 (A), IL2 (B) and IL3 (C) phases in given scalings.
Thermal image	Thermal image calc.	- TM> Trip expect mode: No trip expected/Trip expected - TM> Time to 100 % theta: Time to reach the 100 % thermal cap - TM> Rreference T curr.: reference/pick-up value (IEQ) - TM> Active meas. curr.: the measured maximum TRMS current at a given moment - TM> T est. with act. curr.: estimation of the used thermal capacity including the current at a given moment - TM> T at a given moment: the thermal capacity used at that moment
	Temp. estimates	- TM> Used k for amb. temp: the ambient correction factor at a givenmoment - TM> Max. temp. rise all.: the maximum allowed temperature rise - TM> Temp. rise atm: the calculated temperature rise at a given moment - TM> Hot spot estimate: the estimated hot spot temperature including the ambient temperature - TM> Hot spot max. all.: the maximum allowed temperature for the object

© Arcteq Relays Ltd

Name	Range	Description / values
	Timing status	- TM> Trip delay remaining: the time to reach 100% theta - TM> Trip time to rel.: the time to reach theta while staying below the trip limit during cooling - TM> Alarm 1 time to rel.: the time to reach theta while staying below the Alarm 1 limit during cooling - TM> Alarm 2 time to rel.: the time to reach theta while staying below the Alarm 2 limit during cooling - TM> Inhibit time to rel.: the time to reach theta while staying below the Inhibit limit during cooling

Table. 4.5.34 - 388. Counters.

Name	Description / values
Alarm1 inits	The number of times the function has activated the Alarm 1 output
Alarm2 inits	The number of times the function has activated the Alarm 2 output
Restart inhibits	The number of times the function has activated the Restart inhibit output
Trips	The number of times the function has tripped
Trips Blocked	The number of times the function trips has been blocked

Events and registers

The machine thermal overload protection function (abbreviated "TOLM" in event block names) generates events and registers from the status changes in the events listed below. The user can select which event messages are stored in the main event buffer: ON, OFF, or both. The events triggered by the function are recorded with a time stamp.

The function's output signals can be used for direct I/O controlling and user logic programming. The function also provides a resettable cumulative counter for the TRIP, ALARM 1, ALARM 2, INHIBIT and BLOCKED events.

Table. 4.5.34 - 389. Event messages.

Event block name	Description
TOLM1	Alarm1 ON/OFF
TOLM1	Alarm2 ON/OFF
TOLM1	Inhibit ON/OFF
TOLM1	Trip ON/OFF
TOLM1	Block ON/OFF

The function registers its operation into the last twelve (12) time-stamped registers. The register of the function records the ON event process data for TRIP, BLOCKED, etc. signals. The table below presents the structure of the function's register content.

Table. 4.5.34 - 390. Register content.

Name	Event names
Date and time	dd.mm.yyyy hh:mm:ss.mss
Event	Event name
Time to reach 100 % theta	seconds
Ref. T current	x I_n
Active meas. current	x I_n
T at a given moment	%
Max. temp. rise allowed	degrees
Temp. rise at a given moment	degrees
Hot spot estimate	degrees
Hot spot max. all.	degrees
Trip delay rem.	Remaining time to trip in seconds
Setting group in use	Setting group 1...8 active

4.5.35 Line thermal overload protection (TF>; 49F)

The line thermal overload function is used for the thermal capacity monitoring and protection of cables and overhead lines. This function can also be used for any single time constant application like inductor chokes, certain types of transformers and any other static units which do not have active cooling apart from the cables and overhead lines.

The function constantly monitors the instant values of phase TRMS currents (including harmonics up to 31st) and calculates the set thermal replica status in 5 ms cycles. The function includes a total memory function of the load current conditions according to IEC 60255-8.

The function is based on a thermal replica which represents the protected object's or cable's thermal loading in relation to the current going through the object. The thermal replica includes the calculated thermal capacity that the "memory" uses; it is an integral function which tells this function apart from a normal overcurrent function and its operating principle for overload protection applications.

The thermal image for the function is calculated according to the equation described below:

$$\theta_{t\%} = \left(\left(\theta_{t-1} - \left(\frac{I_{max}}{I_n \times k_{SF} \times k_{amb}} \right)^2 \times e^{-\frac{t}{\tau}} \right) + \left(\frac{I_{max}}{I_n \times k_{SF} \times k_{amb}} \right)^2 \right) \times 100\%$$

Where:

- $\theta_{t\%}$ = Thermal image status in percentages of the maximum thermal capacity available
- θ_{t-1} = Thermal image status in a previous calculation cycle (the memory of the function)
- I_{max} = Measured maximum of the three TRMS phase currents
- I_n = Current for the 100 % thermal capacity to be used (the pick-up current in p.u., t_{max} achieved in τ x 5)

© Arcteq Relays Ltd
IM00099

- k_{SF} = Loading factor (service factor), the maximum allowed load current in p.u., dependent on the protected object or the cable/line installation
- k_{amb} = Temperature correction factor, either from a linear approximation or from a settable ten-point thermal capacity curve
- e = Euler's number
- t = Calculation time step in seconds (0.005 s)
- τ = Thermal time constant of the protected object (in minutes)

The basic operating principle of the thermal replica is based on the nominal temperature rise, which is achieved when the protected object is loaded with a nominal load in a nominal ambient temperature. When the object is loaded with a nominal load for a time equal to its heating constant tau (τ), 63% of the nominal thermal capacity is used. When the loading continues until five times this given constant, the used thermal capacity approaches 100 % indefinitely but never exceeds it. With a single time constant model the cooling of the object follows this same behavior, the reverse of the heating when the current feeding is zero.

Figure. 4.5.35 - 184. Example of thermal image calculation with nominal conditions.

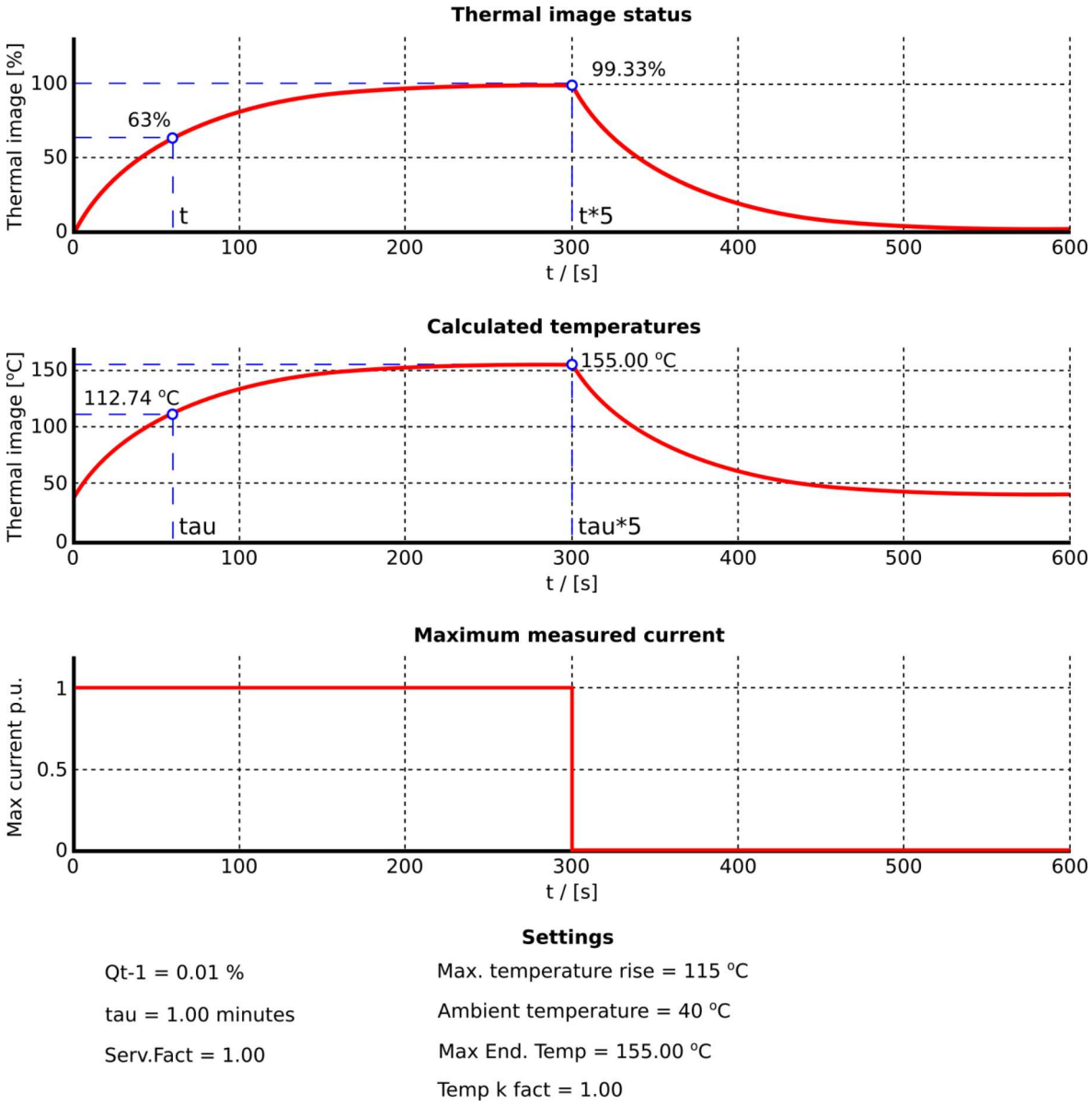

The described behavior is based on the assumption that the monitored object (whether a cable, a line or an electrical device) has a homogenous body which generates and dissipates heat with a rate proportional to the temperature rise caused by the current squared. This is usually the case with cables and other objects while the heat dissipation of overhead lines is dependent on the weather conditions. Weather conditions considering the prevailing conditions in the thermal replica are compensated with the ambient temperature coefficient which is constantly calculated and changing when using RTD sensor for the measurement. When the ambient temperature of the protected object is stable it can be set manually (e.g. underground cables).

The ambient temperature compensation takes into account the set minimum and maximum temperatures and the load capacity of the protected object as well as the measured or set ambient temperature. The calculated coefficient is a linear correction factor, as the following formula shows:

$$t_{amb} < t_{min} = k_{min}$$

$$t_{amb} < t_{ref} = \left(\frac{1 - k_{min}}{t_{ref} - t_{min}} \times (t_{amb} - t_{min})\right) + k_{min}$$

$$t_{amb} > t_{ref} = \left(\frac{k_{max} - 1}{t_{max} - t_{ref}} \times (t_{amb} - t_{ref})\right) + 1.0$$

$$t_{amb} > t_{max} = k_{max}$$

Where:

- t_{amb} = Measured (or set) ambient temperature (can be set in ˚C or in ˚F)
- t_{max} = Maximum temperature (can be set in ˚C or in ˚F) for the protected object
- k_{max} = Ambient temperature correction factor for the maximum temperature
- t_{min} = Minimum temperature (can be set in ˚C or in ˚F) for the protected object
- k_{min} = Ambient temperature correction factor for the minimum temperature
- t_{ref} = Ambient temperature reference (can be set in ˚C or in ˚F, the temperature in which the manufacturer's temperature presumptions apply, the temperature correction factor is 1.0)

© Arcteq Relays Ltd

Figure. 4.5.35 - 185. Ambient temperature coefficient calculation (a three-point linear approximation and a settable correction curve).

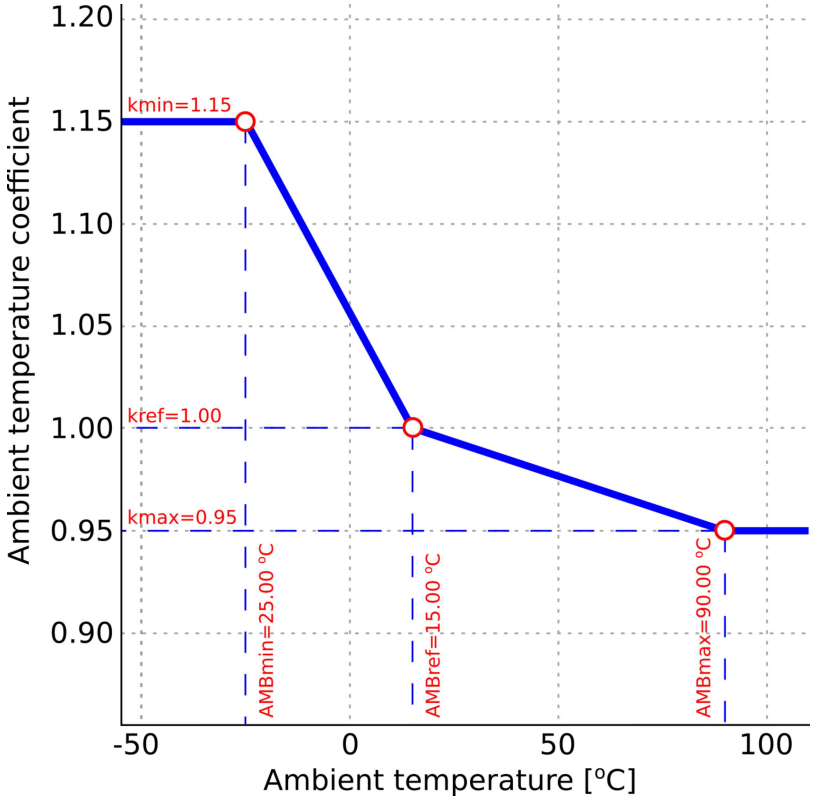

As can be seen in the diagram above, the ambient temperature coefficient is relative to the nominal temperature reference. By default the temperature reference is +15 °C (underground cables) which gives the correction factor value of 1.00 for the thermal replica.

A settable thermal capacity curve uses the linear interpolation for ambient temperature correction with a maximum of ten (10) pairs of temperature–correction factor pairs.

Figure. 4.5.35 - 186. Example of the relationship between ground temperature and correction factor.

Conductor temperature	Ground temperature, C°										
C°	-5	0	5	10	15	20	25	30	35	40	45
90	1.13	1.10	1.06	1.03	1.00	0.96	0.93	0.89	0.86	0.82	0.77

The temperature coefficient may be informed in a similar manner to the figure above in a datasheet provided by the manufacturer.

Figure. 4.5.35 - 187. Settings of the function's ambient temperature coefficient curve.



The temperature and correction factor pairs are set to the function's settable curve.

© Arcteq Relays Ltd

Figure. 4.5.35 - 188. Set correction curve for ambient temperature.

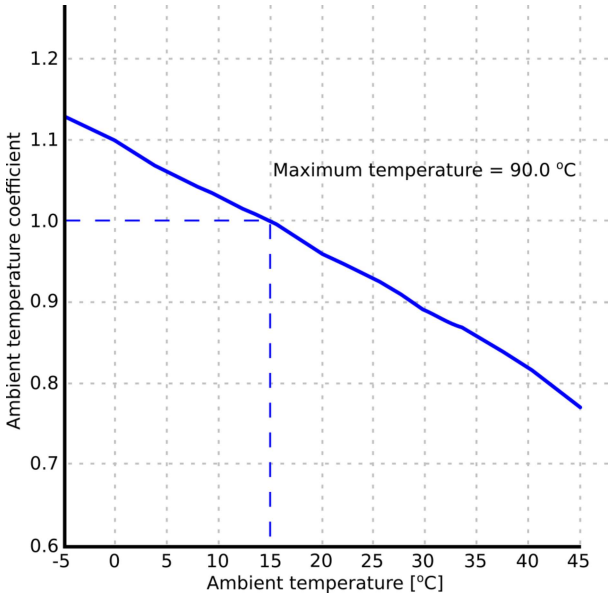

The correction curve for ambient temperature is shown in the figure above. The reference temperature for underground cables is usually +15 ˚C which gives a correction factor of 1.00 (in this case also the nominal temerature). The curve does not need to use as all the available points. The minimum setting is two pairs, resulting in a straight line.

For cables the ambient temperature correction is just one correction factor. The k_{SF} correction factor is used for non-changing corrections; its calculation is explained later in this manual. Calculating correction factors for a cable or overhead installation requires the consulting of the datasheet for the technical specifications of the used cable. This information is usually provided by the cable manufacturer. For example, cable data may be presented as in the figures below (an example from a Prysmian Group cable datasheet) which show the cable's temperature characteristics and voltage ratings (1st image) with different installations and copper or aluminum conductors (2nd and 3rd image).

Figure. 4.5.35 - 189. Example of a high-voltage cable datasheet.

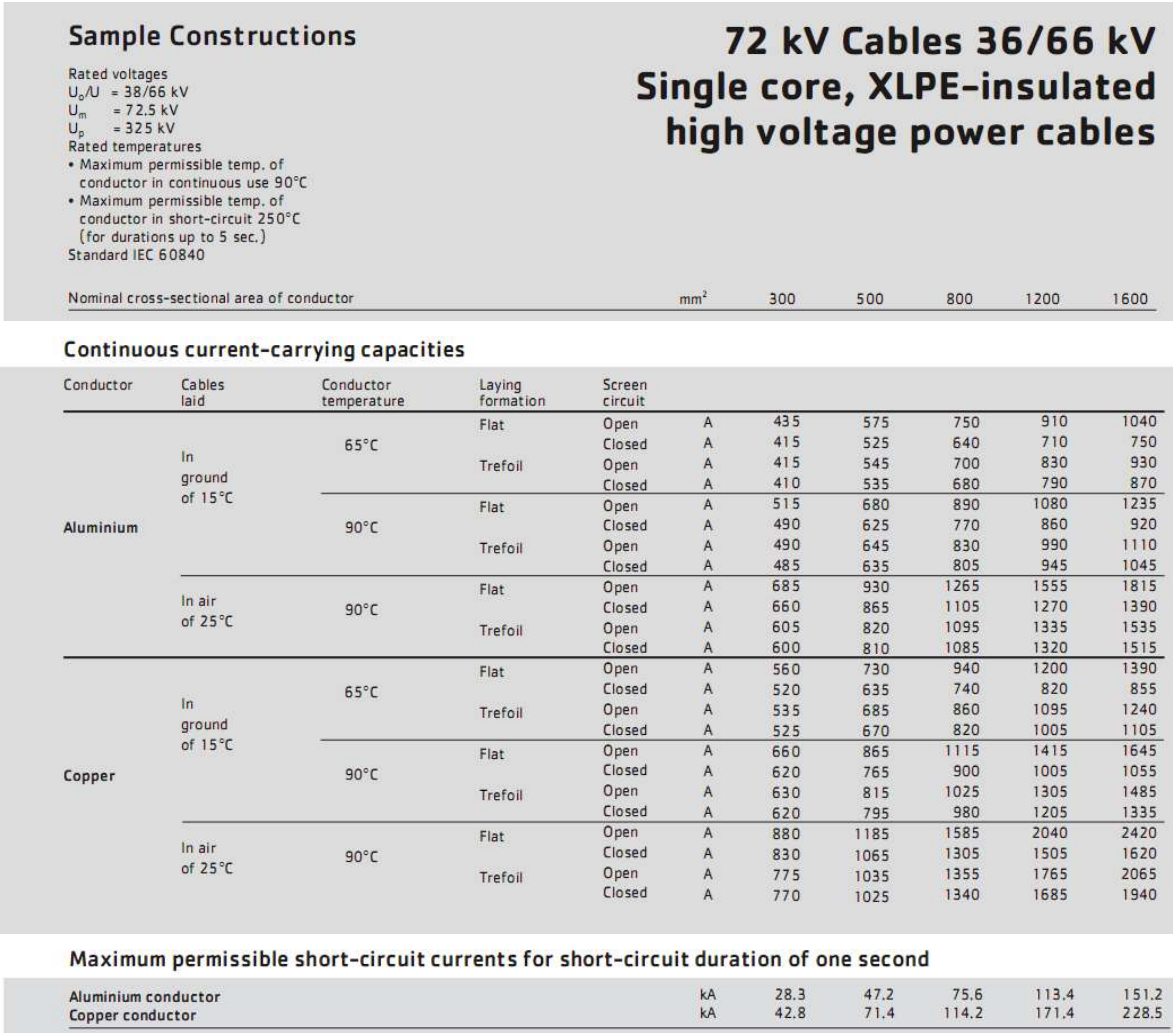

Sample Constructions

Rated voltages
U_o/U = 38/66 kV
U_m = 72.5 kV
U_p = 325 kV
Rated temperatures
- Maximum permissible temp. of conductor in continuous use 90°C
- Maximum permissible temp. of conductor in short-circuit 250°C (for durations up to 5 sec.)

Standard IEC 60840

72 kV Cables 36/66 kV Single core, XLPE-insulated high voltage power cables

Nominal cross-sectional area of conductor		mm²	300	500	800	1200	1600

Continuous current-carrying capacities

Conductor	Cables laid	Conductor temperature	Laying formation	Screen circuit						
Aluminium	In ground of 15°C	65°C	Flat	Open	A	435	575	750	910	1040
				Closed	A	415	525	640	710	750
			Trefoil	Open	A	415	545	700	830	930
				Closed	A	410	535	680	790	870
		90°C	Flat	Open	A	515	680	890	1080	1235
				Closed	A	490	625	770	860	920
			Trefoil	Open	A	490	645	830	990	1110
				Closed	A	485	635	805	945	1045
	In air of 25°C	90°C	Flat	Open	A	685	930	1265	1555	1815
				Closed	A	660	865	1105	1270	1390
			Trefoil	Open	A	605	820	1095	1335	1535
				Closed	A	600	810	1085	1320	1515
Copper	In ground of 15°C	65°C	Flat	Open	A	560	730	940	1200	1390
				Closed	A	520	635	740	820	855
			Trefoil	Open	A	535	685	860	1095	1240
				Closed	A	525	670	820	1005	1105
		90°C	Flat	Open	A	660	865	1115	1415	1645
				Closed	A	620	765	900	1005	1055
			Trefoil	Open	A	630	815	1025	1305	1485
				Closed	A	620	795	980	1205	1335
	In air of 25°C	90°C	Flat	Open	A	880	1185	1585	2040	2420
				Closed	A	830	1065	1305	1505	1620
			Trefoil	Open	A	775	1035	1355	1765	2065
				Closed	A	770	1025	1340	1685	1940

Maximum permissible short-circuit currents for short-circuit duration of one second

Aluminium conductor	kA	28.3	47.2	75.6	113.4	151.2
Copper conductor	kA	42.8	71.4	114.2	171.4	228.5

The datasheet shows the currents which in a combination with a specific installation and a specific construction method achieve a specific conductor temperature in give standard conditions (e.g. a copper conductor reaches a temperature of 90 °C when, for example, it has a continuous current-carrying capacity of 815 A, an open screen circuit, and is laid in a trefoil formation in soil whose temperature is 15 °C).

The most important parameters for setting a working thermal image are the cable's current and the installation place. In addition to the above-mentioned current-carrying capacity table, the manufacturer should also provide data to allow for fine-tuning the thermal image. Equally important to the ampere–temperature values are the presumptive conditions under which the given continuous current-carrying capacity values can be expected to apply. The following figure is an example of these general presumption as presented in a Prysmian Group cable datasheet.

© Arcteq Relays Ltd

Figure. 4.5.35 - 190. General presumptions of high-voltage cables.

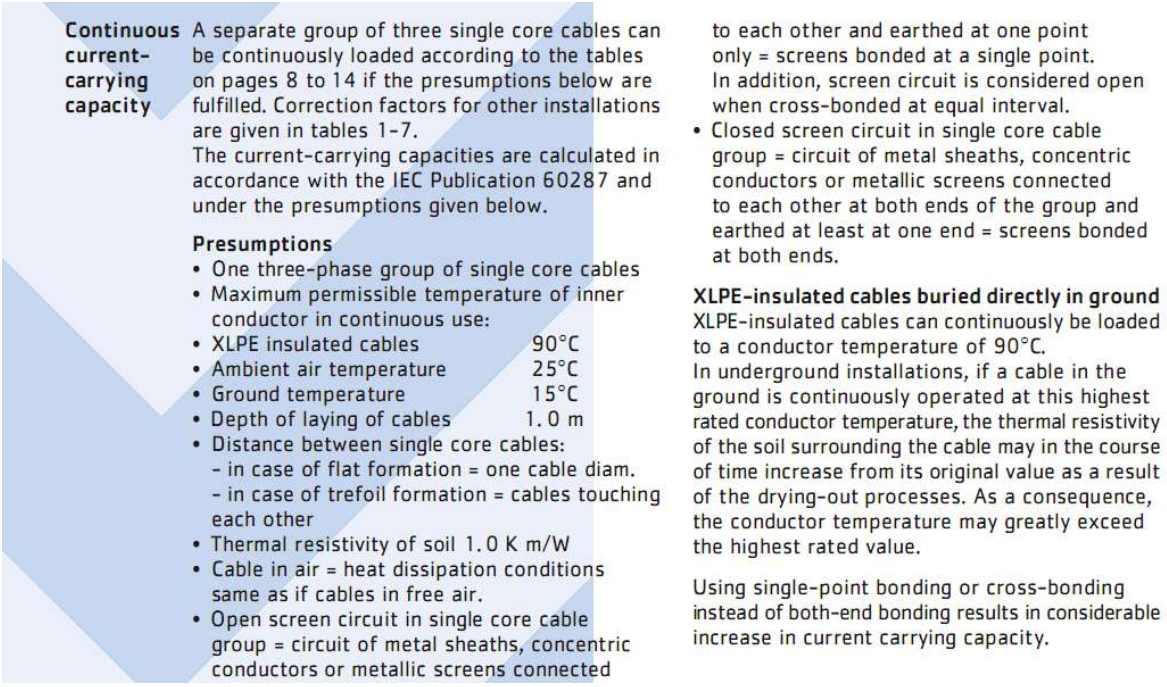

Continuous current-carrying capacity

A separate group of three single core cables can be continuously loaded according to the tables on pages 8 to 14 if the presumptions below are fulfilled. Correction factors for other installations are given in tables 1-7.
The current-carrying capacities are calculated in accordance with the IEC Publication 60287 and under the presumptions given below.

Presumptions

- One three-phase group of single core cables
- Maximum permissible temperature of inner conductor in continuous use:
- XLPE insulated cables 90°C
- Ambient air temperature 25°C
- Ground temperature 15°C
- Depth of laying of cables 1.0 m
- Distance between single core cables:
  - in case of flat formation = one cable diam.
  - in case of trefoil formation = cables touching each other
- Thermal resistivity of soil 1.0 K m/W
- Cable in air = heat dissipation conditions same as if cables in free air.
- Open screen circuit in single core cable group = circuit of metal sheaths, concentric conductors or metallic screens connected to each other and earthed at one point only = screens bonded at a single point. In addition, screen circuit is considered open when cross-bonded at equal interval.
- Closed screen circuit in single core cable group = circuit of metal sheaths, concentric conductors or metallic screens connected to each other at both ends of the group and earthed at least at one end = screens bonded at both ends.

XLPE-insulated cables buried directly in ground

XLPE-insulated cables can continuously be loaded to a conductor temperature of 90°C.
In underground installations, if a cable in the ground is continuously operated at this highest rated conductor temperature, the thermal resistivity of the soil surrounding the cable may in the course of time increase from its original value as a result of the drying-out processes. As a consequence, the conductor temperature may greatly exceed the highest rated value.

Using single-point bonding or cross-bonding instead of both-end bonding results in considerable increase in current carrying capacity.

If the installation conditions vary from the presumed conditions manufacturers may give additional information on how to correct the the current-carrying capacity to match the changed conditions. Below is an example of the correction factors provided a manufacturer (Prysmian) for correcting the current-carrying capacity.

Figure. 4.5.35 - 191. Example of correction factors for the current-carrying capacity as given by a manufacturer.

Correction factors for the current-carrying capacity

The following tables of correction factors are to be applied to the current-carrying capacity when installation conditions vary from the presumptions above.

The rating for most conditions can be quickly estimated by multiplying the continuous current-carrying capacity value by the correction factors given in the appropriate tables 1-7.

Table 1. Correction factors for groups of cables buried directly in ground

Spacing between groups of cables, mm	Numbers of groups of single core cables beside each other						
	2	3	4	5	6	8	10
0 (touching)	0.79	0.69	0.63	0.58	0.55	0.50	0.46
70	0.85	0.75	0.68	0.64	0.60	0.56	0.53
250	0.87	0.79	0.75	0.72	0.69	0.66	0.64

The values apply to groups of three single core cables (in trefoil or flat formation) without or with spacing between the cable groups horizontally placed.

Table 2. Correction factors for different thermal resistivities of soil

Thermal resistivity of soil Km/W	0.7	1.0	1.2	1.5	2.0	2.5	3.0
Correction factor	1.10	1.00	0.92	0.85	0.75	0.69	0.63

Examples of thermal resistivities of soil:

- dry sand (moisture content 0%) 3.0 K m/W
- dry gravel and clay 1.5 K m/W
- semi-dry gravel and sand (moisture content 10%) 1.2 K m/W
- semi-dry and moist gravel 1.0 K m/W
- moist clay and sand (moisture content 25%) 0.7 K m/W

Table 3. Correction factors for different installation depths in ground

Depth of laying, m	0.50-0.70	0.71-0.90	0.91-1.10	1.11-1.30	1.31-1.50
Rating factor	1.05	1.02	1.00	0.97	0.95

Table 4. Correction factors for different ground temperatures

Conductor temperature C°	Ground temperature, C°										
	-5	0	5	10	15	20	25	30	35	40	45
90	1.13	1.10	1.06	1.03	1.00	0.96	0.93	0.89	0.86	0.82	0.77
80	1.14	1.11	1.07	1.04	1.00	0.96	0.92	0.88	0.83	0.78	0.73
70	1.17	1.13	1.09	1.04	1.00	0.95	0.90	0.85	0.80	0.73	0.67
65	1.18	1.14	1.10	1.05	1.00	0.95	0.89	0.84	0.77	0.71	0.63

Table 5. Correction factors for different cables in unfilled plastic pipes

Spacing between the tubes, mm	Numbers of tubes beside each other							
	1	2	3	4	5	6	8	10
0 (touching)	0.80	0.75	0.65	0.60	0.60	0.55	0.55	0.50
70		0.75	0.70	0.65	0.60	0.60	0.55	0.55
250		0.75	0.70	0.70	0.70	0.65	0.65	0.65

For parallel ducts with a group of three single core cables in each and with the cables equally loaded the current-carrying capacity indicated on pages 8 to 14 for cables buried directly in ground shall be reduced by correction factors given above.

The reduction in current carrying capacity can be avoided if the pipes after cable pulling are filled with material thermally equal to the ambient ground.

If factors in table 5 are used, factors in table 1 are not applicable.

Table 6. Correction factors for different ambient air temperatures

Conductor temperature C°	Ambient air temperature, C°									
	10	15	20	25	30	35	40	45	50	55
90	1.12	1.08	1.04	1.00	0.95	0.90	0.85	0.80	0.74	0.68
80	1.14	1.09	1.05	1.00	0.95	0.89	0.84	0.77	0.69	0.61
70	1.18	1.12	1.06	1.00	0.93	0.86	0.79	0.71	0.62	0.52
65	1.20	1.14	1.07	1.00	0.93	0.85	0.77	0.68	0.57	0.45

Table 7. Correction factors for different groups of three single core cables laid in the air

This applies only when the cable temperature does not affect the ambient air temperature.

Type of laying		Cables laid in flat formation. Spacing = One cable diameter (d). Distance from the wall not less than 20 mm.				Cables laid in trefoil formation. Spacing = Two cable diameters (2d). Distance from the wall not less than 20 mm.			
Number of groups		1	2	3		1	2	3	
		Correction factor				Correction factor			
On floor		0.92	0.89	0.88	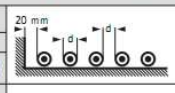	0.95	0.90	0.88	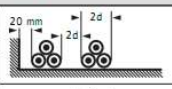
	Number of trays								
On metal trays (restricted air circulation)	1	0.92	0.89	0.88	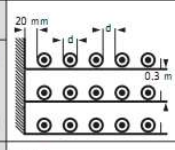	0.95	0.90	0.88	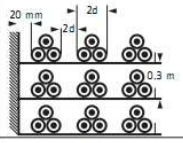
	2	0.87	0.84	0.83		0.90	0.85	0.83	
	3	0.84	0.82	0.81		0.88	0.83	0.81	
	6	0.82	0.80	0.79		0.86	0.81	0.79	
	Number of ladders								
On metal ladders	1	1.00	0.97	0.96	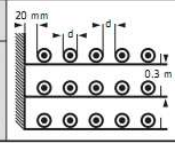	1.00	0.98	0.96	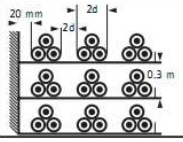
	2	0.97	0.94	0.93		1.00	0.95	0.93	
	3	0.96	0.93	0.92		1.00	0.94	0.92	
	6	0.94	0.91	0.90		1.00	0.93	0.90	

© Arcteq Relays Ltd
IM00099

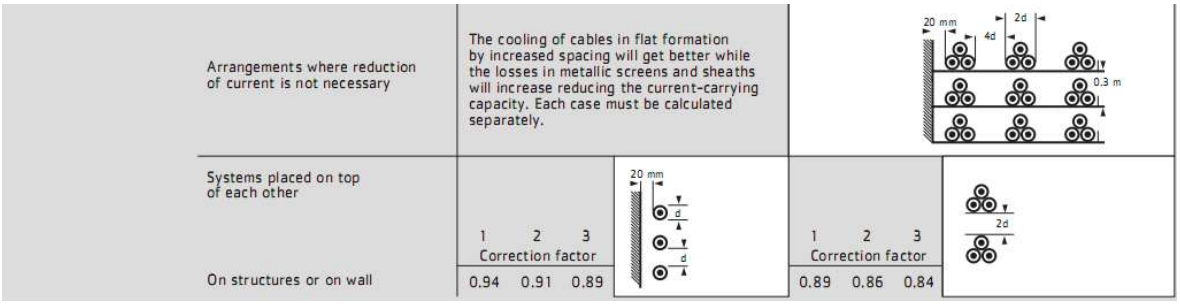

To demonstrate the importance of the k_{SF} (service factor, current-carrying capacity), let us calculate a cable installation with the correct k factor but without setting it to correct value.

First we read the initial data for the setup of the thermal image:

A 66 kV copper cable with a cross-section of 500 mm^2 is installed into ground. Its 1 s permissible short-circuit current is 71.4 kA and its insulation is XLPE. The cable's screen circuit is open and the laying formation is flat. Its current-carrying capacity is 575 A in 65 ˚C and 680 A in 90 ˚C. The reference temperature for ground installation is 15 ˚C.

Let us calculate an estimation of the time constant τ based on the known one-second short-circuit current related to I_n. If the manufacturer has not provided the time constant, it can be estimated from the maximum permissable short-circuit current (usually a one second value). The function uses this same method to estimate the heating time constant.

$$\tau_{cable} = \frac{1\ \text{s}}{60\ \text{s}} \times \left(\frac{I_{1\,s}}{I_n}\right)^2 = \frac{1\ \text{s}}{60\ \text{s}} \times \left(\frac{71\,400\ \text{A}}{680\ \text{A}}\right)^2 = 183.75\ \text{min}$$

The rest of the settings are in the initial data text above:

- I_n = 680 A
- T_{max} = 90 ˚C
- T_{amb} = 15 ˚C
- T_{ref} = 15 ˚C
- k_{SF} = 1.0.

Figure. 4.5.35 - 192. Thermal image response with nominal load (installation according to presumptions).

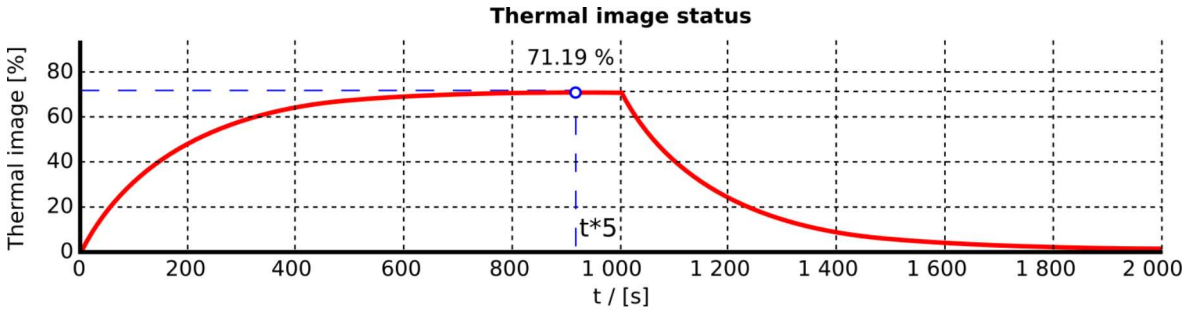

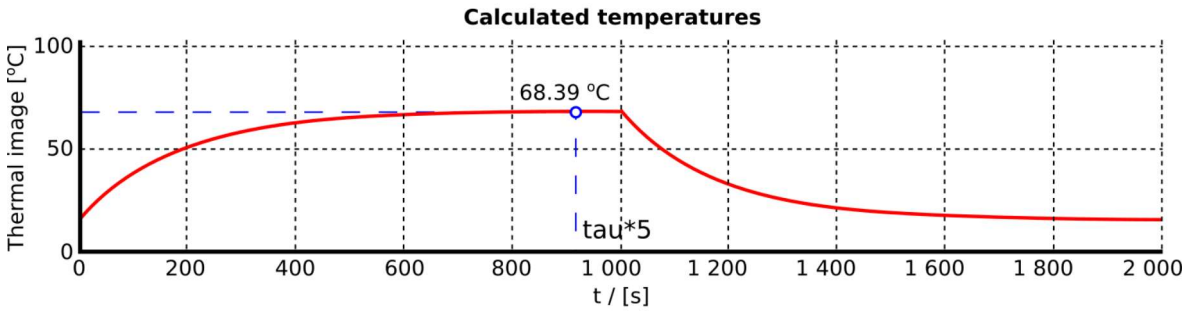

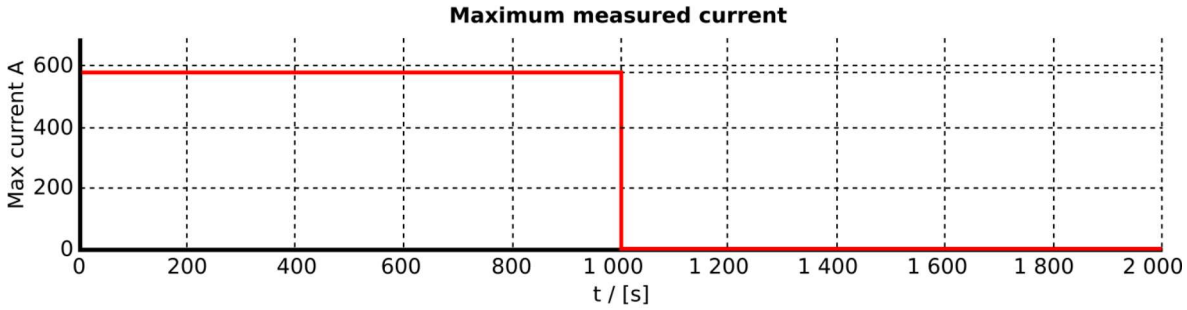

Settings

I_N = 680 A	Max. temperature rise = 75 °C	Reference temperature = 15 °C
Starting temp = 0 %	Ambient temperature = 15 °C	I_{MAX} = 575 A
tau = 183.75 min	Max End. Temp = 90 °C	
Service factor = 1.00	Temperature k factor = 1.00	

As the results show, the end temperature of 68.39 ˚C is reached when the cable is loaded with a stable current for time equalling five times the time constant τ. This uses approximately 71 % of the thermal capacity. According to the datasheet, this current should set the temperature around 65 ˚C; therefore, the model overprotects by three degrees.

© Arcteq Relays Ltd

Figure. 4.5.35 - 193. Thermal image response with maximum load (installation according presumptions).

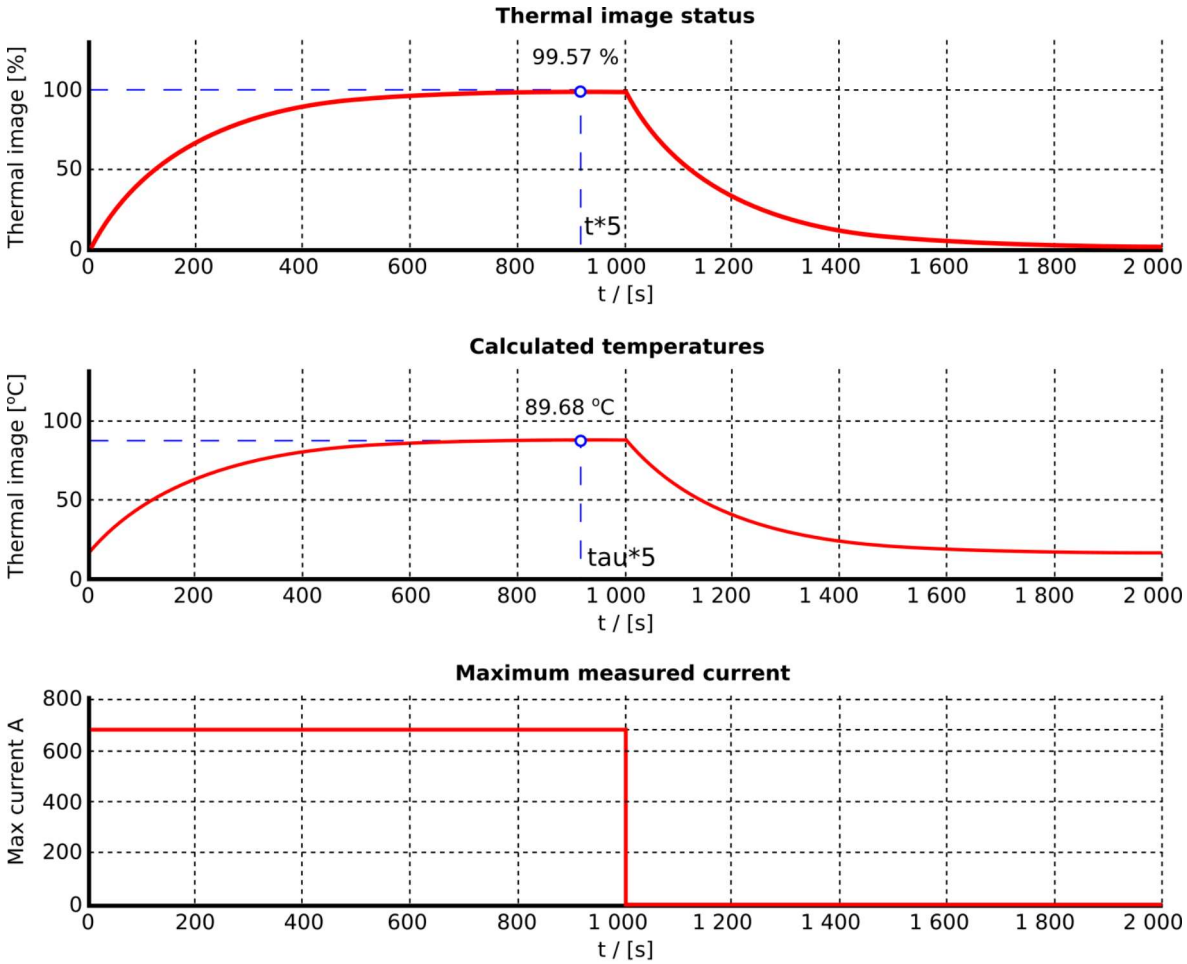

Settings

I_N = 680 A	Max. temperature rise = 75 °C	Reference temperature = 15 °C
Starting temp = 0 %	Ambient temperature = 15 °C	I_{MAX} = 680 A
tau = 183.75 min	Max End. Temp = 90 °C	
Service factor = 1.00	Temperature k factor = 1.00	

The maximum allowed load results in the end temperature of 89.68 ˚C which means that 99.57 % of the thermal capacity is used. This result matches the expectations of the thermal image perfectly. The user can now securely set the cable's overheating alarm.

When comparing the result to the fully-tuned model in the application, let us include all of the installation correction factors to the image.

A 66 kV copper cable with a cross-section of 500 mm^2 is installed *with no adjacent cables (k=1)* into a *ground consisting of dry gravel and clay (k=0.85)* and *into the depth of 1.5 meters (k=0.95)*. The cable's 1 s permissible short-circuit current is 71.4 kA and its insulation is XLPE. The cable's screen circuit is open and the laying formation is flat. Its current-carrying capacity is 575 A in 65 ˚C and 680 A in 90 ˚C. The reference temperature for ground installation is 15 ˚C. The cable's thermal time constant is 183.8 min.

From this initial data one can calculate the k_{SF} correction factor according to the following formula (k factor related information in italics):

$$k_{SF} = 1 \times 0.85 \times 0.95 = 0.81$$

Therefore, the settings are as follows:

- I_n = 680 A
- T_{max} = 90 ˚C
- T_{amb} = 15 ˚C
- T_{ref} = 15 ˚C
- τ = 183.8 min
- k_{SF} = 0.81.

Figure. 4.5.35 - 194. Thermal image response with nominal currents and fine-tuned k_{SF} correction factor.

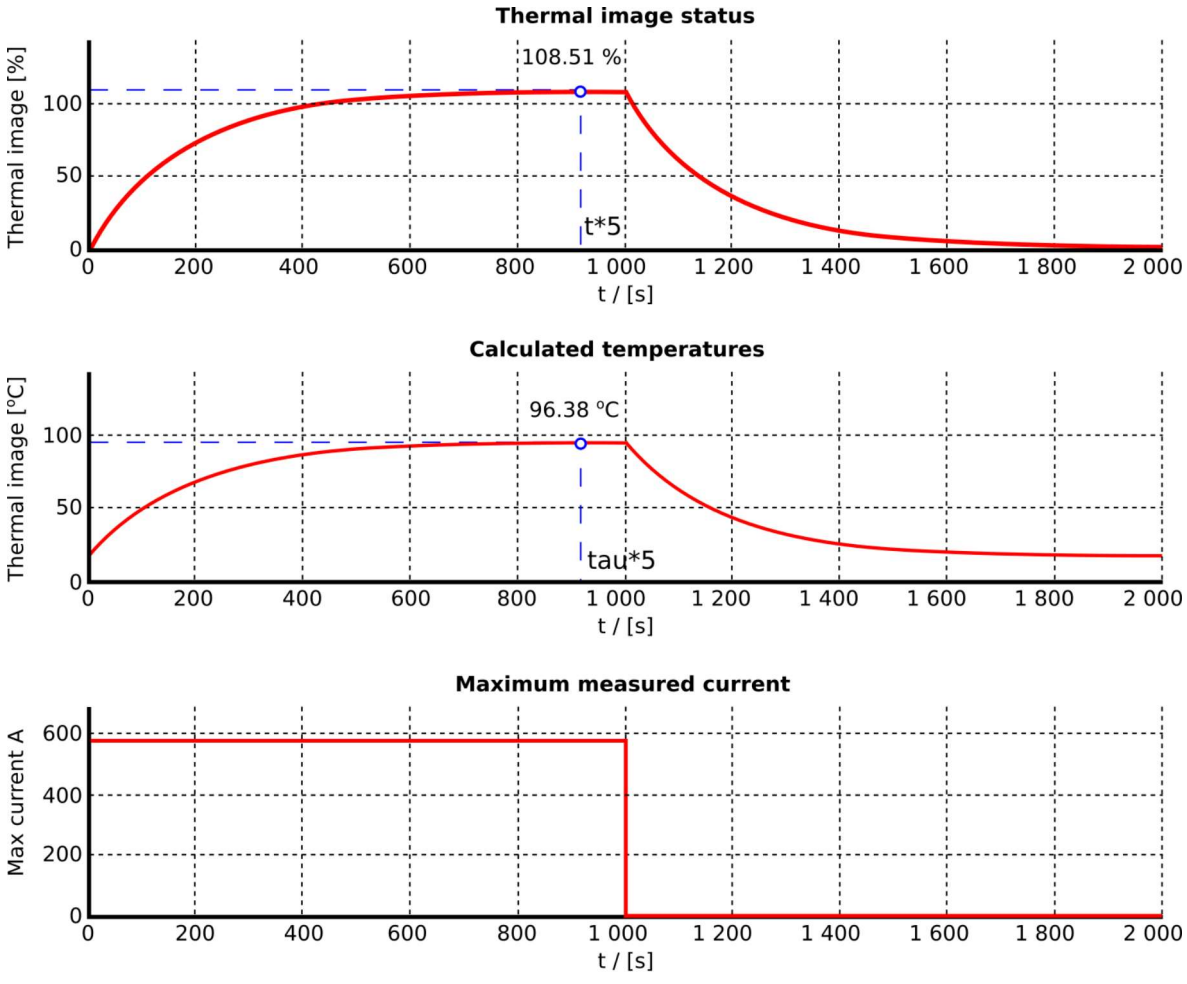

When trying to load the cable with the nominal current one can see the actual current-carrying capacity of the cable is much lower than in the presumptive conditions. A normal loading current can now warm up the cable too much and threaten its withstandability. If the k_{SF} had not been set, the thermal image would show a temperature of appr. 68 ˚C instead of the real temperature of 96 ˚C.

© Arcteq Relays Ltd

Figure. 4.5.35 - 195. Thermal response with k_{SF} factor correctly set.

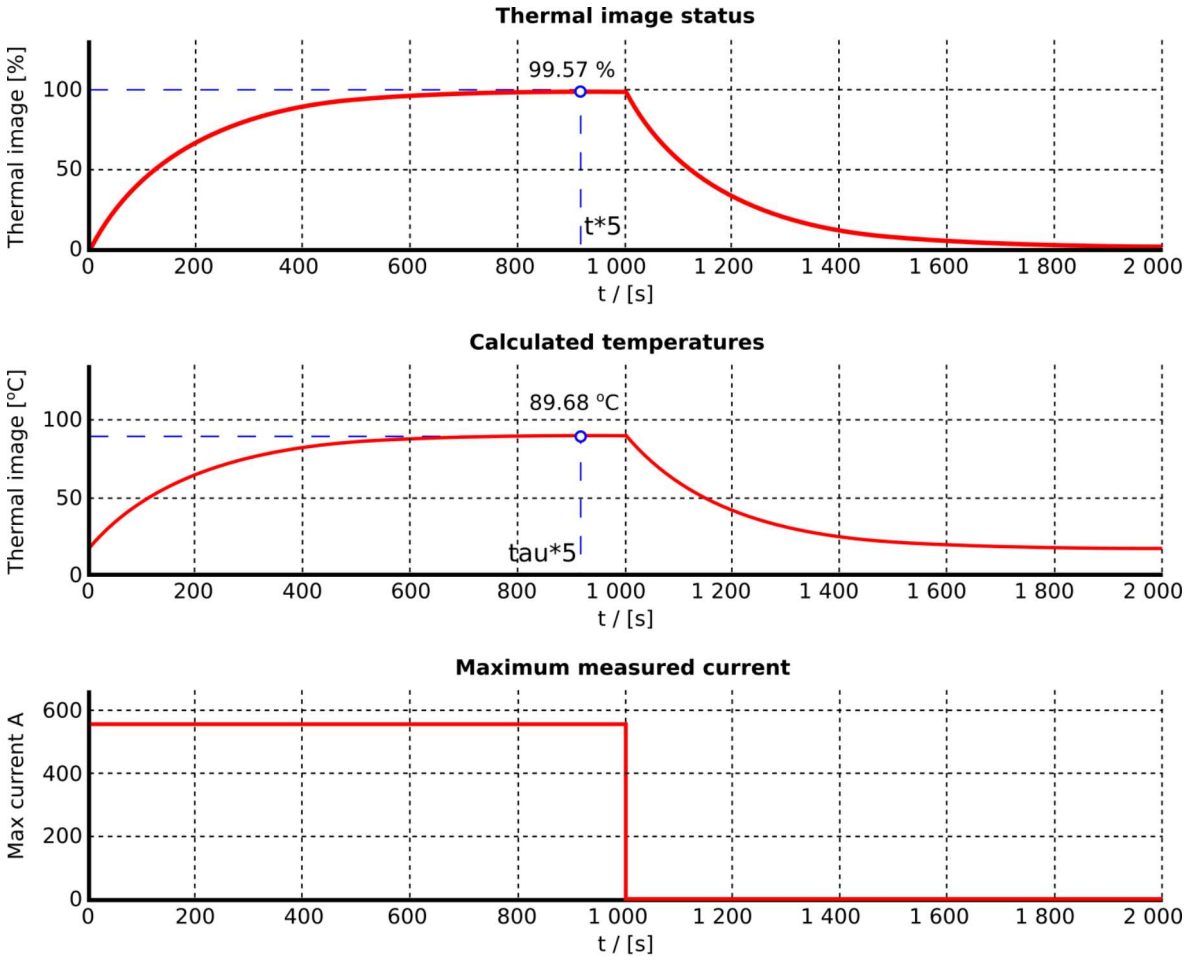

Settings

I_N = 680 A	Max. temperature rise = 75 °C	Reference temperature = 15 °C
Starting temp = 0 %	Ambient temperature = 15 °C	I_{MAX} = 550.8 A
tau = 183.75 min	Max End. Temp = 90 °C	
Service factor = 0.81	Temperature k factor = 1.00	

When the installation conditions vary from the presumptive conditions, the cable's current-carrying capacity can be reduced so that the temperature of 90 ˚C is achieved with a 550 A current instead of the 680 A current given in the initial data.

Estimating trip time

Calculated effective nominal current:

$I_N = k_{SF} \times tamb_{fact} \times I_{Nom}$

Where:

- I_N = calculated effective nominal current
- k_{SF} = the service factor
- k_{amb} = the ambient temperature factor
- I_{Nom} = the nominal current of the protected device

Calculated end heating:

$\theta_{End} = (I_{meas}/I_N)^2$

Where:

- I_{meas} = the measured current
- I_N = the calculated effective nominal current

Calculated time constant:

$\tau = e^{(-0.005[s] \times (Tc[min] \times 60)[s])}$

Where:

- e = Euler's number
- τ_C = the time constant set by the user
- 0.005s is the program cycle time

Calculated active thermal status:

$\theta_{Calc} = ((\theta_{-1} - \theta_{End}) \times \tau) + \theta_{End}$

Where:

- θ_{-1} = previous cycle calculation result (integrating function needs the memory to operate)
- θ_{End} = the calculated end heating (dependent on the measured current)
- τ = the calculated time constant

The tripping time can be calculated based on these previous calculations according to the following formula (the result in seconds). With this base information the tripping time can be calculated with the formula above (in seconds) when replacing the θ_{Calc} with the value of the thermal level which from the tripping time is wanted to be calculated (in per-unit value).

$$t_{est.\ trip} = l_n\left(\frac{I_{meas}^2 - (k_{fact} \times tamb_{fact} \times \sqrt{\theta_{Calc}} \times I_n)^2}{(I_{meas}^2 - I_n^2)}\right) \times \tau \times 60$$

Function inputs and outputs

The following figure presents a simplified function block diagram of the line thermal overload protection function.

Measured input

The function block uses phase current measurement values. The function block uses TRMS values from the whole harmonic specter of 32 components. RTD input can be used for measuring ambient temperature.

Table. 4.5.35 - 391. Measurement inputs of the TF> function.

Signal	Description
I_{L1} TRMS	TRMS measurement of phase L1 (A) current
I_{L2} TRMS	TRMS measurement of phase L2 (B) current
I_{L3} TRMS	TRMS measurement of phase L3 (C) current

© Arcteq Relays Ltd

Signal	Description
RTD	Temperature measurement for the ambient correction

Table. 4.5.35 - 392. General settings (not selectable under setting groups)

Name	Range	Default	Description
TF> LN mode	• On • Blocked • Test • Test/ Blocked • Off	On	Set mode of TOLF block. This parameter is visible only when *Allow setting of individual LN mode* is enabled in *General* menu.
TF> mode	• Disabled • Activated	Disabled	The selection of the function is activated or disabled in the configuration. By default it is not in use.
TF> force status to	• Normal • Blocked • Alarm1 On • Alarm2 On • Inhibit On • Trip On	Normal	Force the status of the function. Visible only when *Enable stage forcing* parameter is enabled in *General* menu.
Temp C or F deg	• C • F	C	The selection of whether the temperature values of the thermal image and RTD compensation are shown in Celsius or in Fahrenheit.

Table. 4.5.35 - 393. Settings for thermal replica.

Name	Range	Step	Default	Description
IN thermal cap current	0.10…40.00xI_n	0.01xI_n	1.00xI_n	The current for the 100 % thermal capacity to be used (the pick-up current in p.u., with t_{max} achieved in time τ x 5).
Set or Estimate tau (t const)	• Set • Estimate	-	Set	The selection of the time constant setting. If "Set" is selected, the Tau (t const) setting is available and the time constant to be used can be set there. If "Estimate" is selected, the cable's initial data parameters are visible.
Tau (t const)	0.1…500.0min	0.1min	10.0min	The time constant setting. This time constant is used for heating and cooling of the protected object. This setting is visible if the "Set" is selected for the "Set or Estimate tau" setting.
Max. perm. OC. current (norm **ik**1s)	1…1 000 000A	1A	75 000A	The maximum-rated short-circuit current of the protected object (cable). Usually this value is presented as a one second value. This setting is visible if "Estimate" is selected for the "Set or Estimate tau" setting.

Name	Range	Step	Default	Description
Max. OC. time (norm 1 s)	0.1…5s	0.1s	1.0s	The time of the maximum-rated short-circuit current of the protected object (usually 1 s). This setting is visible if "Estimate" is selected for the "Set or Estimate tau" setting.
Nominal current	1…1 000 000A	1A	700A	The rated nominal current in the primary value of the protected object under nominal-rated conditions. This setting is visible if "Estimate" is selected for the "Set or Estimate tau" setting.
Estimated tau	0…1800min	0.005min	191.3min (from defaults)	The estimated result which is used for the thermal replica's time constant. After the previous three required parameters are set the device will calculate this value. This setting is visible if "Estimate" is selected for the "Set or Estimate tau" setting.
k_{SF} (service factor)	0.01…5.00	0.01	1.00	The service factor which corrects the value of the maximum allowed current according to installation and other conditions varying from the presumptive conditions.
Cold reset default theta	0.0…150.0%	0.1%	60.0%	The thermal image status in the restart of the function/ device. The value is given in percentages of the used thermal capacity of the protected object. It is also possible to reset the thermal element. This parameter can be used when testing the function to manually set the current thermal cap to any value.

Table. 4.5.35 - 394. Environmental settings

Name	Range	Step	Default	Description
Object max. temp. (t_{max} = 100%)	0…500deg	1deg	90deg	The maximum allowed temperature for the protected object. The default suits for Celsius range and for PEX-insulated cables.
Ambient temp. sel.	• Manual set • RTD	-	Manual set	The selection of whether fixed or measured ambient temperature is used for the thermal image biasing.
Man. amb. temp. set.	0…500deg	1deg	15deg	The manual fixed ambient temperature setting for the thermal image biasing. Underground cables usually use 15 °C. This setting is visible if "Manual set" is selected for the "Ambient temp. sel." setting.
RTD amb. temp. read.	0…500deg	1deg	15deg	The RTD ambient temperature reading for the thermal image biasing. This setting is visible if "RTD" is selected for the "Ambient temp. sel." setting.
Ambient lin. or curve	• Linear est. • Set curve	-	Linear est.	The selection of how to correct the ambient temperature, either by internally calculated compensation based on end temperatures or by a user-settable curve. The default setting is "Linear est." which means the internally calculated correction for ambient temperature.

© Arcteq Relays Ltd
IM00099

Name	Range	Step	Default	Description
Temp. reference (t_{ref}) k_{amb}=1.0	-60…500deg	1deg	15deg	The temperature reference setting. The manufacturer's temperature presumptions apply and the thermal correction factor is 1.00 (rated temperature). For underground cables the set value for this is usually 15 °C and for cables in the air it is usually 25 °C. This setting is visible if "Ambient lin. or curve" is set to "Linear est."
Max. ambient temp.	0…500deg	1deg	45deg	The maximum ambient temperature setting. If the measured temperature is more than the maximum set temperature, the set correction factor for the maximum temperature is used. This setting is visible if "Ambient lin. or curve" is set to "Linear est."
k at max. amb. temp.	0.01…5.00xI_n	0.01xI_n	1.00xI_n	The temperature correction factor for the maximum ambient temperature setting. This setting is visible if "Ambient lin. or curve" is set to "Linear est."
Min. ambient temp.	-60…500deg	1deg	0deg	The minimum ambient temperature setting. If the measured temperature is below the minimum set temperature, the set correction factor for minimum temperature is used. This setting is visible if "Ambient lin. or curve" is set to "Linear est."
k at min. amb. temp.	0.01…5.00xI_n	0.01xI_n	1.00xI_n	The temperature correction factor for the minimum ambient temperature setting. This setting is visible if "Ambient lin. or curve" is set to "Linear est."
Amb. temp. ref. 1...10	-50.0…500.0deg	0.1deg	15deg	The temperature reference points for the user-settable ambient temperature coefficient curve. This setting is visible if "Ambient lin. or curve" is set to "Set curve".
Amb. temp. k1...k10	0.01…5.00	1.00	0.01	The coefficient value for the temperature reference point. The coefficient and temperature reference points must be set as pairs. This setting is visible if "Ambient lin. or curve" is set to "Set curve".
Add curvepoint 3…10	• Not used • Used	-	Not used	The selection of whether or not the curve temperature/ coefficient pair is in use. The minimum number to be set for the temperature/coefficient curve is two pairs and the maximum is ten pairs. If the measured temperature is below the set minimum temperature reference or above the maximum set temperature reference, the used temperature coefficient is the first or last value in the set curve. This setting is visible if "Ambient lin. or curve" is set to "Set curve".

Pick-up settings

The operating characteristics of the machine thermal overload protection function are completely controlled by the thermal image. The thermal capacity value calculated from the thermal image can set the I/O controls with ALARM 1, ALARM 2, INHIBIT and TRIP signals.

Setting group selection controls the operating characteristics of the function, i.e. the user or user-defined logic can change function parameters while the function is running.

Table. 4.5.35 - 395. Pick-up settings.

Name	Range	Step	Default	Description
Enable TF> Alarm 1	• Disabled • Enabled	-	Disabled	Enabling/disabling the ALARM 1 signal and the I/O.
TF> Alarm 1 level	0.0…150.0%	0.1%	40%	ALARM 1 activation threshold.
Enable TF> Alarm 2	• Disabled • Enabled	-	Disabled	Enabling/disabling the ALARM 2 signal and the I/O.
TF> Alarm 2 level	0.0…150.0%	0.1%	40%	ALARM 2 activation threshold.
Enable TF> Rest Inhibit	• Disabled • Enabled	-	Disabled	Enabling/disabling the Restart Inhibit signal and the I/O.
TF> Inhibit level	0.0…150.0%	0.1%	80%	INHIBIT activation threshold.
Enable TF> Trip	• Disabled • Enabled	-	Enabled	Enabling/disabling the Trip signal and the I/O.
TF> Trip level	0.0…150.0%	0.1%	100%	TRIP activation threshold. This parameter is only visible when "Enable TF> Trip" is Enabled.
TF> Trip delay	0.000…3600.000s	0.005s	0.000s	The trip signal's additional delay. This delay delays the trip signal generation by a set time. The default setting is 0.000 s which does not give an added time delay for the trip signal. This parameter is only visible when "Enable TF> Trip" is Enabled.

Function blocking

The blocking signal is evaluated at the start of each program cycle. The blocking signals are connected to the function's dedicated input, which can be configured in the *IO → Blocking Input Control* tab of the function.

- When the pick-up element activates and the blocking signal is not active, a START signal is generated, and the function starts or continues with the trip time countdown.
- When the pick-up element activates and the blocking signal is active, a BLOCKED signal is generated, and the function does not process the event further.
- When a START signal is already active and the blocking input signal becomes active, the START signal is reset and BLOCKED signal is generated. The release time characteristics are then processed in the same way as when the pick-up signal is reset.

The blocking signal needs to reach the device minimum of 5 ms before the set operating delay has passed in order for the blocking to activate in time.

© Arcteq Relays Ltd

Measurements and indications

The function outputs measured process data from the following magnitudes:

Table. 4.5.35 - 396. General status codes.

Name	Range	Description
TF> LN behaviour	• On • Blocked • Test • Test/ Blocked • Off	Displays the mode of TOLF block. This parameter is visible only when *Allow setting of individual LN mode* is enabled in *General* menu.
TF> Condition	• Normal • Alarm 1 ON • Alarm 2 ON • Inhibit ON • Trip ON • Blocked	The function's operating condition at the moment considering binary IO signal status. No outputs are controlled when the status is "Normal".
Thermal status	• Light / No load • High overload • Overloading • Load normal	The function's thermal image status. When the measured current is below 1 % of the nominal current, the status "Light/No load" is shown. When the measured current is below the trip limit, the status "Load normal" is shown. When the measured current is above the pick-up limit but below 2 x I_n , the status "Overloading" is shown. When the measured current is above 2 x I_n, the status "High overload" is shown.
TF> Setting alarm	• SF setting ok • Service factor set fault. Override to 1.0	Indicates if SF setting has been set wrong and the actually used setting is 1.0. Visible only when there is a setting fault.
TF> Setting alarm	• Ambient setting ok • Ambient t set fault. Override to 1.0	Indicates if ambient temperature settings have been set wrong and actually used setting is 1.0. Visible only when there is a setting fault.
TF> Setting alarm	• Nominal current calc ok • Nominal current set fault. Override to 1.0	Indicates if nominal current calculation is set wrong and actually used setting is 1.0. Visible only when there is a setting fault.
TF> Setting alarm	• Ambient setting ok • Inconsistent setting of ambient k	Indicates if ambient k setting has been set wrong. Visible only when there is a setting fault.

Table. 4.5.35 - 397. Measurements.

Name	Range	Description/values
Currents	• Primary A • Secondary A • Per unit	The active phase current measurement from IL1 (A), IL2 (B) and IL3 (C) phases in given scalings.
Thermal image	Thermal image calc.	- TF> Trip expect mode: No trip expected/Trip expected - TF> Time to 100 % theta: Time to reach the 100 % thermal cap - TF> Rreference T curr.: reference/pick-up value (IEQ) - TF> Active meas. curr.: the measured maximum TRMS current at a given moment - TF> T est. with act. curr.: estimation of the used thermal capacity including the current at a given moment - TF> T at a given moment: the thermal capacity used at that moment
	Temp. estimates	- TF> Used k for amb. temp: the ambient correction factor at a givenmoment - TF> Max. temp. rise all.: the maximum allowed temperature rise - TF> Temp. rise atm: the calculated temperature rise at a given moment - TF> Hot spot estimate: the estimated hot spot temperature including the ambient temperature - TF> Hot spot max. all.: the maximum allowed temperature for the object
	Timing status	- TF> Trip delay remaining: the time to reach 100% theta - TF> Trip time to rel.: the time to reach theta while staying below the trip limit during cooling - TF> Alarm 1 time to rel.: the time to reach theta while staying below the Alarm 1 limit during cooling - TF> Alarm 2 time to rel.: the time to reach theta while staying below the Alarm 2 limit during cooling - TF> Inhibit time to rel.: the time to reach theta while staying below the Inhibit limit during cooling

Table. 4.5.35 - 398. Counters.

Name	Description / values
Alarm1 inits	The number of times the function has activated the Alarm 1 output
Alarm2 inits	The number of times the function has activated the Alarm 2 output
Restart inhibits	The number of times the function has activated the Restart inhibit output
Trips	The number of times the function has tripped
Trips Blocked	The number of times the function trips has been blocked

Events and registers

The line thermal overload protection function (abbreviated "TOLF" in event block names) generates events and registers from the status changes in the events listed below. The user can select which event messages are stored in the main event buffer: ON, OFF, or both. The events triggered by the function are recorded with a time stamp.

The function's outputs can be used for direct I/O controlling and user logic programming. The function also provides a resettable cumulative counter for the ALARM, INHIBIT, TRIP and BLOCKED events.

© Arcteq Relays Ltd

Table. 4.5.35 - 399. Event messages.

Event block name	Event names
TOLF1	Alarm1 ON/OFF
TOLF1	Alarm2 ON/OFF
TOLF1	Inhibit ON/OFF
TOLF1	Trip ON/OFF
TOLF1	Block ON/OFF

The function registers its operation into the last twelve (12) time-stamped registers. The register of the function records the ON event process data for TRIP or BLOCKED. The table below presents the structure of the function's register content.

Table. 4.5.35 - 400. Register content.

Name	Description
Date and time	dd.mm.yyyy hh:mm:ss.mss
Event	Event name
Time to reach 100 % theta	seconds
Ref. T current	x I_n
Active meas. current	x I_n
T at a given moment	%
Max. temp. rise allowed	degrees
Temp. rise at a given moment	degrees
Hot spot estimate	degrees
Hot spot maximum allowed	degrees
Trip delay rem.	seconds
Setting group in use	Setting group 1...8 active

4.5.36 Transformer thermal overload protection (TT>; 49T)

The transformer thermal overload protection function is used for monitoring and protecting thermal capacity in power transformers.

The function constantly monitors the instant values of phase TRMS currents (including harmonics up to 31st) and calculates the set thermal replica status in 5 ms cycles. The function includes a total memory function of the load current conditions according to IEC 60255-8.

The function is based on a thermal replica which represents the protected object's or cable's thermal loading in relation to the current going through the object. The thermal replica includes the calculated thermal capacity that the "memory" uses; it is an integral function which tells this function apart from a normal overcurrent function and its operating principle for overload protection applications.

The thermal image for the function is calculated according to the equation described below:

$$\theta_{t\%} = \left(\left(\theta_{t-1} - \left(\frac{I_{MAX}}{I_N \times k_{SF} \times k_{AMB}} \right)^2 \times e^{-\frac{t}{\tau_1/\tau_2}} \right) + \left(\frac{I_{MAX}}{I_N \times k_{SF} \times k_{AMB}} \right)^2 \right) \times 100\%$$

Where:

- $\theta_{t\%}$ = Thermal image status, percentage of the maximum available thermal capacity
- θ_{t-1} = Thermal image status, previous calculation cycle (the memory of the function)
- I_{max} = Measured maximum of the three TRMS phase currents
- I_N = Current for the 100 % thermal capacity to be used (pick-up current in p.u., t_{max} achieved in τ x 5)
- k_{SF} = Loading factor (service factor), maximum allowed load current (in p.u.) value, dependent on the protected object or cable/line installation
- k_{amb} = Temperature correction factor, either from a linear approximation or from a settable ten-point thermal capacity curve
- t = Calculation time step (0.005 s)
- e = Euler's number
- τ_1 = Thermal heating time constant of the protected object (in minutes)
- τ_2 = Thermal heating time constant of the protected object (in minutes)

The basic operating principle of the thermal replica is based on the nominal temperature rise, which is achieved when the protected object is loaded with a nominal load in a nominal ambient temperature. When the object is loaded with a nominal load for a time equal to its heating constant tau (τ), 63% of the nominal thermal capacity is used. When the loading continues until five times this given constant, the used thermal capacity approaches 100 % indefinitely but never exceeds it. With a single time constant model the cooling of the object follows this same behavior, the reverse of the heating when the current feeding is zero.

© Arcteq Relays Ltd

Figure. 4.5.36 - 196. Example of thermal image calculation with nominal conditions.

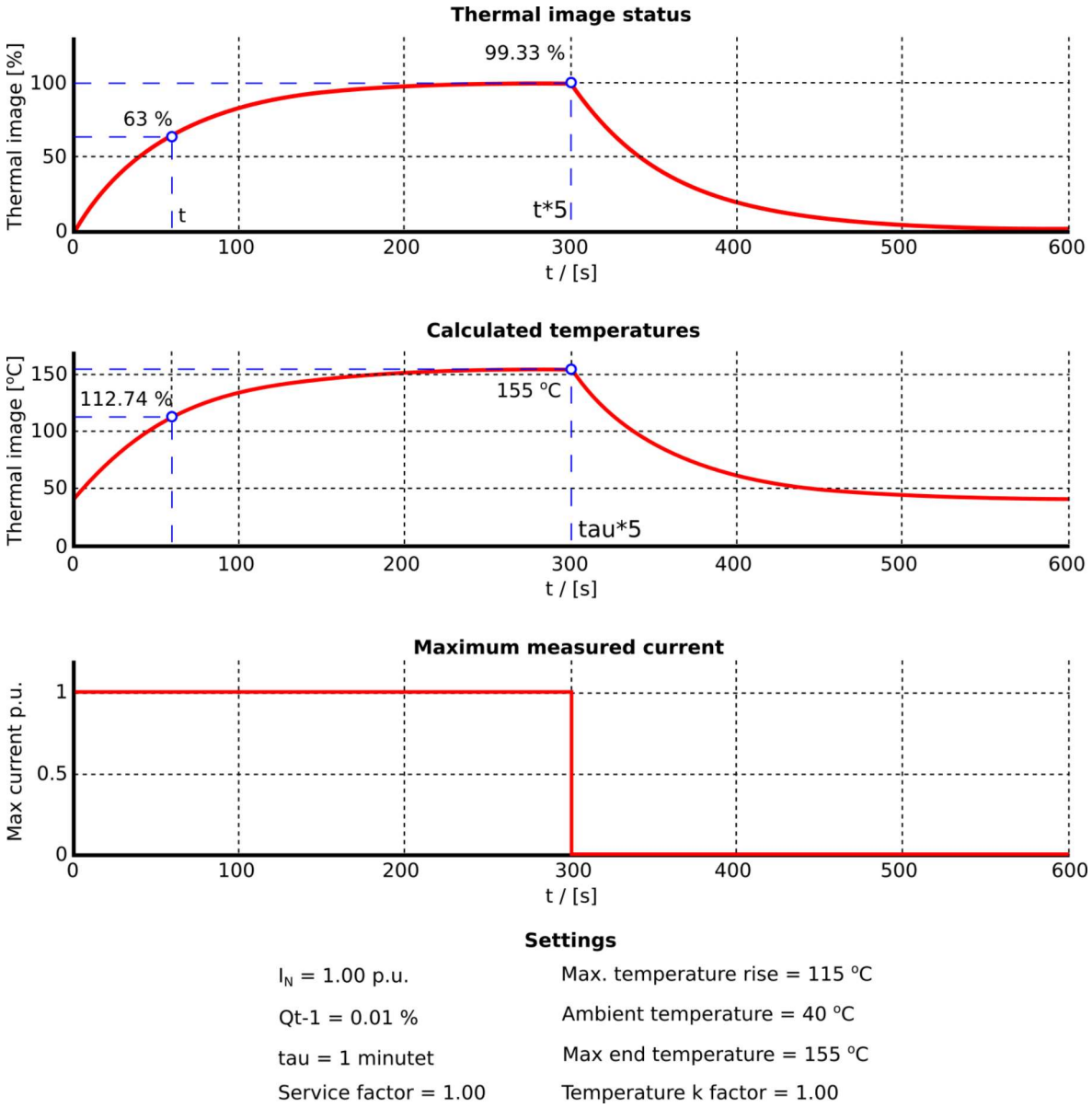

The described behavior is based on the assumption that the monitored object (whether a cable, a line or an electrical device) has a homogenous body which generates and dissipates heat with a rate proportional to the temperature rise caused by the current squared. This is usually the case with cables and other objects while the heat dissipation of overhead lines is dependent on the weather conditions. Weather conditions considering the prevailing conditions in the thermal replica are compensated with the ambient temperature coefficient which is constantly calculated and changing when using RTD sensor for the measurement. When the ambient temperature of the protected object is stable it can be set manually (e.g. underground cables).

The ambient temperature compensation takes into account the set minimum and maximum temperatures and the load capacity of the protected object as well as the measured or set ambient temperature. The calculated coefficient is a linear correction factor, as the following formula shows:

$$t_{Amb<t_{min}} = k_{min}$$

$$t_{Amb<t_{ref}} = \left(\frac{1 - k_{min}}{t_{ref} - t_{min}} \times (t_{AMB} - t_{min})\right) + k_{min}$$

$$t_{Amb>t_{ref}} = \left(\frac{k_{max} - 1}{t_{max} - t_{ref}} \times (t_{AMB} - t_{ref})\right) + 1.0$$

$$t_{Amb>t_{max}} = k_{max}$$

Where:

- t_{amb} = Measured (set) ambient temperature (can be set in ˚C or ˚F)
- t_{max} = Maximum temperature (can be set in ˚C or ˚F) for the protected object
- k_{max} = Ambient temperature correction factor for the maximum temperature
- t_{min} = Minimum temperature (can be set in ˚C or ˚F) for the protected object
- k_{min} = Ambient temperature correction factor for the minimum temperature
- t_{ref} = Ambient temperature reference (can be set in ˚C or ˚F, the temperature in which the manufacturer's temperature presumptions apply, the temperature correction factor is 1.0)

Figure. 4.5.36 - 197. Ambient temperature coefficient calculation (a three-point linear approximation and a settable correction curve).

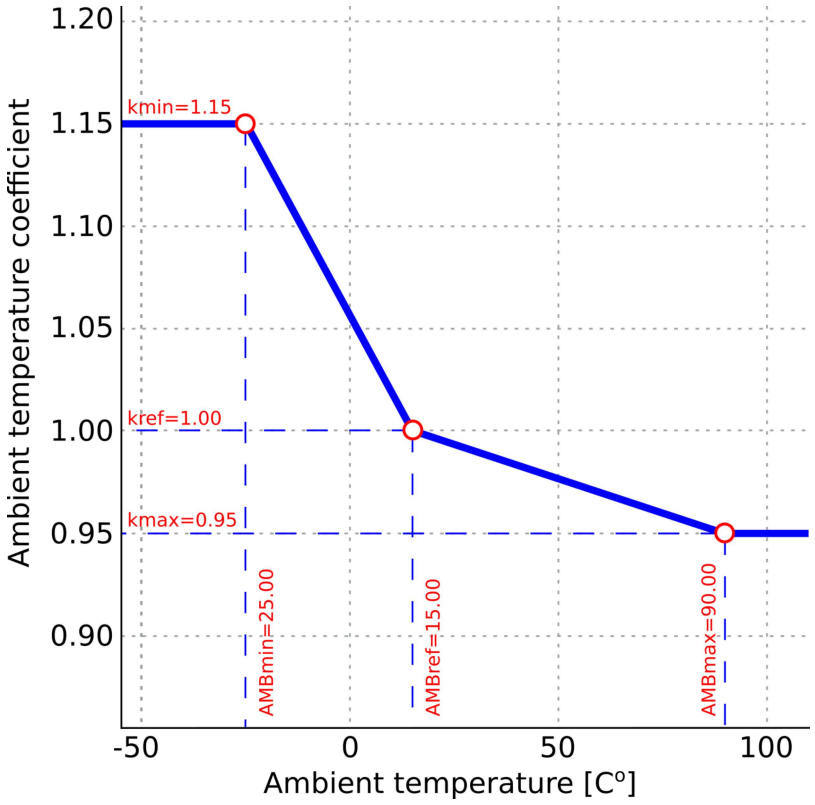

Function inputs and outputs

The following figure presents a simplified function block diagram of the transformer thermal overload protection function.

© Arcteq Relays Ltd

Measured input

The function block uses phase current measurement values. The function block uses TRMS values from the whole harmonic specter of 32 components. RTD input can be used for measuring the ambient temperature.

Table. 4.5.36 - 401. Measurement inputs of the TT> function.

Signal	Description
I_{L1}TRMS	TRMS measurement of phase L1 (A) current
I_{L2}TRMS	TRMS measurement of phase L2 (B) current
I_{L3}TRMS	TRMS measurement of phase L3 (C) current
RTD	Temperature measurement for the ambient correction

Table. 4.5.36 - 402. General settings (not selectable under setting groups)

Name	Range	Default	Description
TT> LN mode	• On • Blocked • Test • Test/ Blocked • Off	On	Set mode of TOLT block. This parameter is visible only when *Allow setting of individual LN mode* is enabled in *General* menu.
TT> mode	• Disabled • Activated	Disabled	The selection of the function is activated or disabled in the configuration. By default it is not in use.
TT> force status to	• Normal • Blocked • Alarm1 On • Alarm2 On • Inhibit On • Trip On	Normal	Force the status of the function. Visible only when *Enable stage forcing* parameter is enabled in *General* menu.
Temp C or F deg	• C • F	C	The selection of whether the temperature values of the thermal image and RTD compensation are shown in Celsius or in Fahrenheit.

Table. 4.5.36 - 403. Settings for thermal replica.

Name	Range	Step	Default	Description
IN thermal cap current	0.10…40.00xI_n	0.01xI_n	1.00xI_n	The current for the 100 % thermal capacity to be used (the pick-up current in p.u., with t_{max} achieved in time τ x 5).
tau h (t const)	0.1…500.0min	0.1min	10.0min	The τ_h time constant setting. This time constant is used for the heating of the protected object.

Name	Range	Step	Default	Description
tau c (t const)	0.1…500.0min	0.1min	10.0min	The τ_C time constant setting. This time constant is used for the cooling of the protected object.
k_{SF} (service factor)	0.01…5.00	0.01	1.00	The service factor which corrects the value of the maximum allowed current according to installation and other conditions varying from the presumptive conditions.
Cold reset default theta	0.0…150.0%	0.1%	60.0%	The thermal image status in the restart of the function or the device. The value is given in percentages of the used thermal capacity of the protected object. It is also possible to reset the thermal element. This parameter can be used when testing the function to manually set the current thermal cap to any value.

Table. 4.5.36 - 404. Environmental settings

Name	Range	Step	Default	Description
Object max. temp. (t_{max} = 100%)	0…500deg	1deg	90deg	The maximum allowed temperature for the protected object. The default suits for Celsius range and for PEX-insulated cables.
Ambient temp. sel.	• Manual set • RTD	-	Manual set	The selection of whether fixed or measured ambient temperature is used for the thermal image biasing.
Man. amb. temp. set	0…500deg	1deg	15deg	The manual fixed ambient temperature setting for the thermal image biasing. Underground cables usually use 15 °C. This setting is visible if "Manual set" is selected for the "Ambient temp. sel." setting.
RTD amb. temp. read.	0…500deg	1deg	15deg	The RTD ambient temperature reading for the thermal image biasing. This setting is visible if "RTD" is selected for the "Ambient temp. sel." setting.
Ambient lin. or curve	• Linear est. • Set curve	-	Linear est.	The selection of how to correct the ambient temperature, either by internally calculated compensation based on end temperatures or by a user-settable curve. The default setting is "Linear est." which means the internally calculated correction for ambient temperature.
Temp. reference (t_{ref}) k_{amb}=1.0	-60…500deg	1deg	15deg	The temperature reference setting. The manufacturer's temperature presumptions apply and the thermal correction factor is 1.00 (rated temperature). For underground cables the set value for this is usually 15 °C and for cables in the air it is usually 25 °C. This setting is visible if "Ambient lin. or curve" is set to "Linear est."
Max. ambient temp.	0…500deg	1deg	45deg	The maximum ambient temperature setting. If the measured temperature is more than the maximum set temperature, the set correction factor for the maximum temperature is used. This setting is visible if "Ambient lin. or curve" is set to "Linear est."

© Arcteq Relays Ltd

Name	Range	Step	Default	Description
k at max. amb. temp.	0.01…5.00xI_n	0.01xI_n	1.00xI_n	The temperature correction factor for the maximum ambient temperature setting. This setting is visible if "Ambient lin. or curve" is set to "Linear est."
Min. ambient temp.	-60…500deg	1deg	0deg	The minimum ambient temperature setting. If the measured temperature is below the minimum set temperature, the set correction factor for minimum temperature is used. This setting is visible if "Ambient lin. or curve" is set to "Linear est."
k at min. amb. temp.	0.01…5.00xI_n	0.01xI_n	1.00xI_n	The temperature correction factor for the minimum ambient temperature setting. This setting is visible if "Ambient lin. or curve" is set to "Linear est."
Amb. temp. ref. 1...10	-50.0…500.0deg	0.1deg	15deg	The temperature reference points for the user-settable ambient temperature coefficient curve. This setting is visible if "Ambient lin. or curve" is set to "Set curve".
Amb. temp. k1...k10	0.01…5.00	1.00	0.01	The coefficient value for the temperature reference point. The coefficient and temperature reference points must be set as pairs. This setting is visible if "Ambient lin. or curve" is set to "Set curve".
Add curvepoint 3…10	• Not used • Used	-	Not used	The selection of whether or not the curve temperature/ coefficient pair is in use. The minimum number to be set for the temperature/coefficient curve is two pairs and the maximum is ten pairs. If the measured temperature is below the set minimum temperature reference or above the maximum set temperature reference, the used temperature coefficient is the first or last value in the set curve. This setting is visible if "Ambient lin. or curve" is set to "Set curve".

Pick-up settings

The operating characteristics of the machine thermal overload protection function are completely controlled by the thermal image. The thermal capacity value calculated from the thermal image can set the I/O controls with ALARM 1, ALARM 2, INHIBIT and TRIP signals.

Setting group selection controls the operating characteristics of the function, i.e. the user or user-defined logic can change function parameters while the function is running.

Table. 4.5.36 - 405. Pick-up settings.

Name	Range	Step	Default	Description
Enable TT> Alarm 1	• Disabled • Enabled	-	Disabled	Enabling/disabling the ALARM 1 signal and the I/O.
TT> Alarm 1 level	0.0…150.0%	0.1%	40%	ALARM 1 activation threshold.
Enable TT> Alarm 2	• Disabled • Enabled	-	Disabled	Enabling/disabling the ALARM 2 signal and the I/O.

Name	Range	Step	Default	Description
TT> Alarm 2 level	0.0…150.0%	0.1%	40%	ALARM 2 activation threshold.
Enable TT> Rest Inhibit	• Disabled • Enabled	-	Disabled	Enabling/disabling the INHIBIT signal and the I/O.
TT> Inhibit level	0.0…150.0%	0.1%	80%	INHIBIT activation threshold.
Enable TT> Trip	• Disabled • Enabled	-	Enabled	Enabling/disabling the TRIP signal and the I/O.
TT> Trip level	0.0…150.0%	0.1%	100%	TRIP activation threshold. This parameter is only visible when "Enable TT> Trip" is Enabled.
TT> Trip delay	0.000…3600.000s	0.005s	0.000s	The trip signal's additional delay. This delay delays the trip signal generation by a set time. The default setting is 0.000 s which does not give an added time delay for the trip signal. This parameter is only visible when "Enable TT> Trip" is Enabled.

Function blocking

The blocking signal is evaluated at the start of each program cycle. The blocking signals are connected to the function's dedicated input, which can be configured in the *IO → Blocking Input Control* tab of the function.

- When the pick-up element activates and the blocking signal is not active, a START signal is generated, and the function starts or continues with the trip time countdown.
- When the pick-up element activates and the blocking signal is active, a BLOCKED signal is generated, and the function does not process the event further.
- When a START signal is already active and the blocking input signal becomes active, the START signal is reset and BLOCKED signal is generated. The release time characteristics are then processed in the same way as when the pick-up signal is reset.

The blocking signal needs to reach the device minimum of 5 ms before the set operating delay has passed in order for the blocking to activate in time.

Measurements and indications

The function outputs measured process data from the following magnitudes:

© Arcteq Relays Ltd
IM00099

Table. 4.5.36 - 406. General status codes.

Name	Range	Description
TT> LN behaviour	• On • Blocked • Test • Test/ Blocked • Off	Set mode of TOLT block. This parameter is visible only when *Allow setting of individual LN mode* is enabled in *General* menu.
TT> Condition	• Normal • Alarm 1 ON • Alarm 2 ON • Inhibit ON • Trip ON • Blocked	The function's operating condition at the moment considering binary IO signal status. No outputs are controlled when the status is "Normal".
Thermal status	• Light/No load • High overload • Overloading • Load normal	The function's thermal image status. When the measured current is below 1 % of the nominal current, the status "Light/No load" is shown. When the measured current is below the trip limit, the status "Load normal" is shown. When the measured current is above the pick-up limit but below 2 x I_n , the status "Overloading" is shown. When the measured current is above 2 x I_n, the status "High overload" is shown.
TT> Setting alarm	• SF setting ok • Service factor set fault. Override to 1.0	Indicates if SF setting has been set wrong and the actually used setting is 1.0. Visible only when there is a setting fault.
TT> Setting alarm	• Ambient setting ok • Ambient t set fault. Override to 1.0	Indicates if ambient temperature settings have been set wrong and actually used setting is 1.0. Visible only when there is a setting fault.
TT> Setting alarm	• Nominal current calc ok • Nominal current set fault. Override to 1.0	Indicates if nominal current calculation is set wrong and actually used setting is 1.0. Visible only when there is a setting fault.
TT> Setting alarm	• Ambient setting ok • Inconsistent setting of ambient k	Indicates if ambient k setting has been set wrong. Visible only when there is a setting fault.

Table. 4.5.36 - 407. Measurements.

Name	Range	Description/values
Currents	• Primary A • Secondary A • Per unit	The active phase current measurement from IL1 (A), IL2 (B) and IL3 (C) phases in given scalings.
Thermal image	Thermal image calc.	- TT> Trip expect mode: No trip expected/Trip expected - TT> Time to 100 % theta: Time to reach the 100 % thermal cap - TT> Rreference T curr.: reference/pick-up value (IEQ) - TT> Active meas. curr.: the measured maximum TRMS current at a given moment - TT> T est. with act. curr.: estimation of the used thermal capacity including the current at a given moment - TT> T at a given moment: the thermal capacity used at that moment
	Temp. estimates	- TT> Used k for amb. temp: the ambient correction factor at a givenmoment - TT> Max. temp. rise all.: the maximum allowed temperature rise - TT> Temp. rise atm: the calculated temperature rise at a given moment - TT> Hot spot estimate: the estimated hot spot temperature including the ambient temperature - TT> Hot spot max. all.: the maximum allowed temperature for the object
	Timing status	- TT> Trip delay remaining: the time to reach 100% theta - TT> Trip time to rel.: the time to reach theta while staying below the trip limit during cooling - TT> Alarm 1 time to rel.: the time to reach theta while staying below the Alarm 1 limit during cooling - TT> Alarm 2 time to rel.: the time to reach theta while staying below the Alarm 2 limit during cooling - TT> Inhibit time to rel.: the time to reach theta while staying below the Inhibit limit during cooling

Table. 4.5.36 - 408. Counters.

Name	Description / values
Alarm1 inits	The number of times the function has activated the Alarm 1 output
Alarm2 inits	The number of times the function has activated the Alarm 2 output
Restart inhibits	The number of times the function has activated the Restart inhibit output
Trips	The number of times the function has tripped
Trips Blocked	The number of times the function trips has been blocked

Events and registers

The line thermal overload protection function (abbreviated "TOLT" in event block names) generates events and registers from the status changes in the events listed below. The user can select which event messages are stored in the main event buffer: ON, OFF, or both. The events triggered by the function are recorded with a time stamp.

The function's outputs can be used for direct I/O controlling and user logic programming. The function also provides a resettable cumulative counter for the ALARM, INHIBIT, TRIP and BLOCKED events.

© Arcteq Relays Ltd

Table. 4.5.36 - 409. Event messages.

Event block name	Event names
TOLT1	Alarm1 ON/OFF
TOLT1	Alarm2 ON/OFF
TOLT1	Inhibit ON/OFF
TOLT1	Trip ON/OFF
TOLT1	Block ON/OFF

The function registers its operation into the last twelve (12) time-stamped registers. The register of the function records the ON event process data for TRIP, BLOCKED, etc. signals. The table below presents the structure of the function's register content.

Table. 4.5.36 - 410. Register content.

Name	Description
Date and time	dd.mm.yyyy hh:mm:ss.mss
Event	Event name
Time to reach 100 % theta	seconds
Ref. T current	x I_n
Active meas. current	x I_n
T at a given moment	%
Max. temp. rise allowed	degrees
Temp. rise at a given moment	degrees
Hot spot estimate	degrees
Hot spot maximum allowed	degrees
Trip delay rem.	seconds
Setting group in use	Setting group 1...8 active

4.5.37 Motor start/ locked rotor monitoring (Ist>; 48/14)

The motor start/locked rotor monitoring function is used for monitoring the start-up's duration as well as the start-up's stress on the motor. The function can also be used after starting locked rotor protection.

The operating principle of the function is either definite maximum locked rotor time monitoring, or inverse operating time based on the allowed I^2t calculation. When using the I^2t-calculated starting time, the maximum allowed starting time is automatically scaled according to the motor's current. For example, when the network voltage is lower and thus the starting current is also lower, the calculation gives the motor a longer starting time knowing these conditions prolong any start-up. The maximum allowed starting time can be set manually, or the function can be commanded to automatically follow the prescribed hot and cold safe stalling times of the motor manufacturer. Please note that this requires the following: the machine thermal overload protection function must be activated, it must pick-up the automatic safe stalling times, and the thermal status of the motor must be communicated to the Ist> function. The user can set both the allowed starting time and the speed switch input. The speed switch may be required by some high-mass applications when the start-up may last longer; the user should check and ensure that the motor is actually accelerating instead of standing still with its rotor locked.

A recommended setup for this function is for the I^2t mode to be used in starting; if motor running/ locked rotor situations at times occur in some parts of the duty cycle during normal use, the locked rotor protection must also be applied. The following five figures present a number of suggested applications for the Ist> function for various situations. It is advised that the speed switch –if available– is also used for the motor start monitoring, especially when the motor has a high load when starting, thus making the start-up take very long.

Figure. 4.5.37 - 198. Outputs in normal motor start, no speed switch.

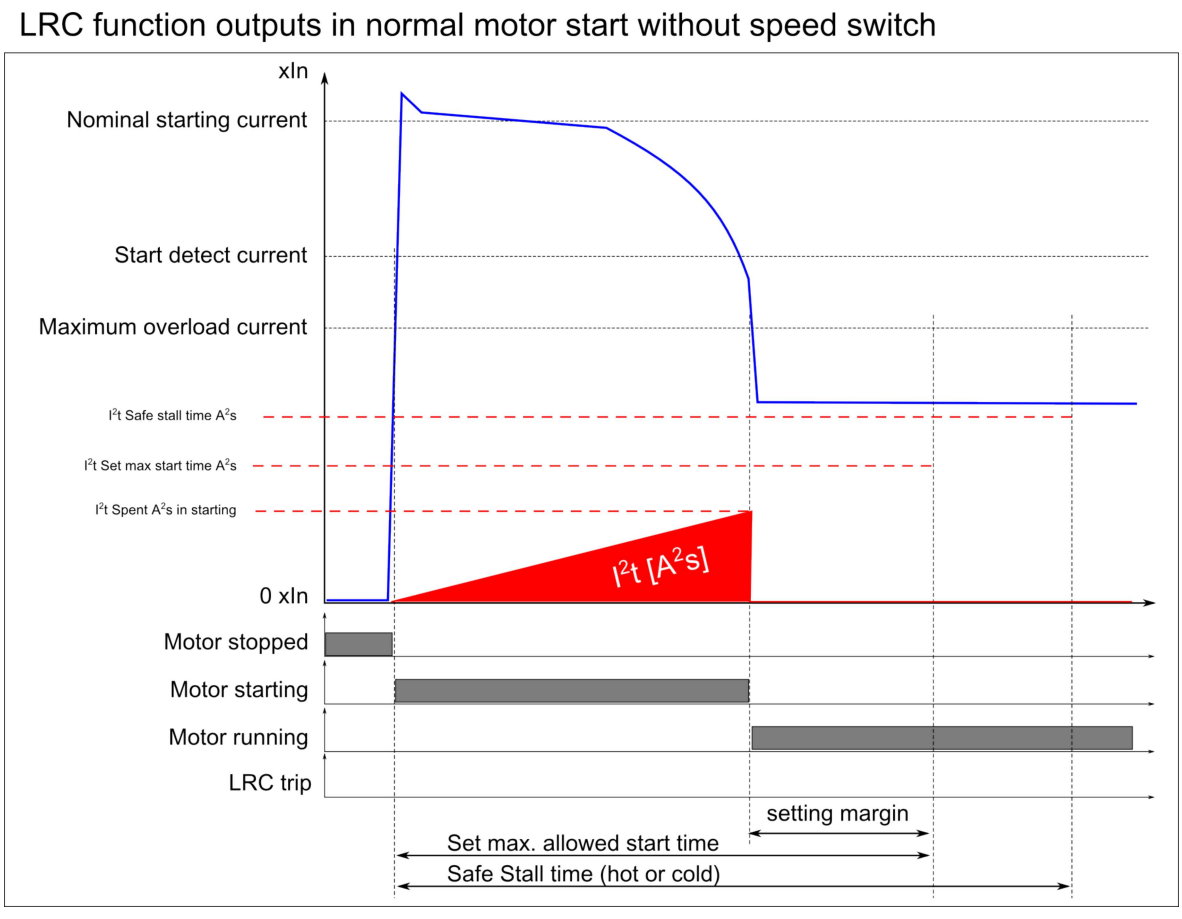

© Arcteq Relays Ltd

The Ist> function should be set so that it takes into account the application's required starting time for a normal motor start. The setting of the function should include a setting margin for the expected starting time. If the starting of the motor is dependent on the process status (e.g. the motor's drive may have a full load or have no load when started), the setting should afford it the longest possible starting time as the status may affect the motor's starting time. If the start-up situation is supposed to always be the same, a sufficient setting for the function's starting monitor would be the expected starting time with an additional 10 % margin. During start-up the function monitors the accumulated I^2t value and when it drops below the calculated I^2t value, the function allows the starting process continue.

If the starting of the motor takes longer than the function's set value, the function trips the breaker and halts the starting process; if the motor cannot start normally there is something wrong with the application.

Figure. 4.5.37 - 199. Outputs when motor starting takes too long, no speed switch.

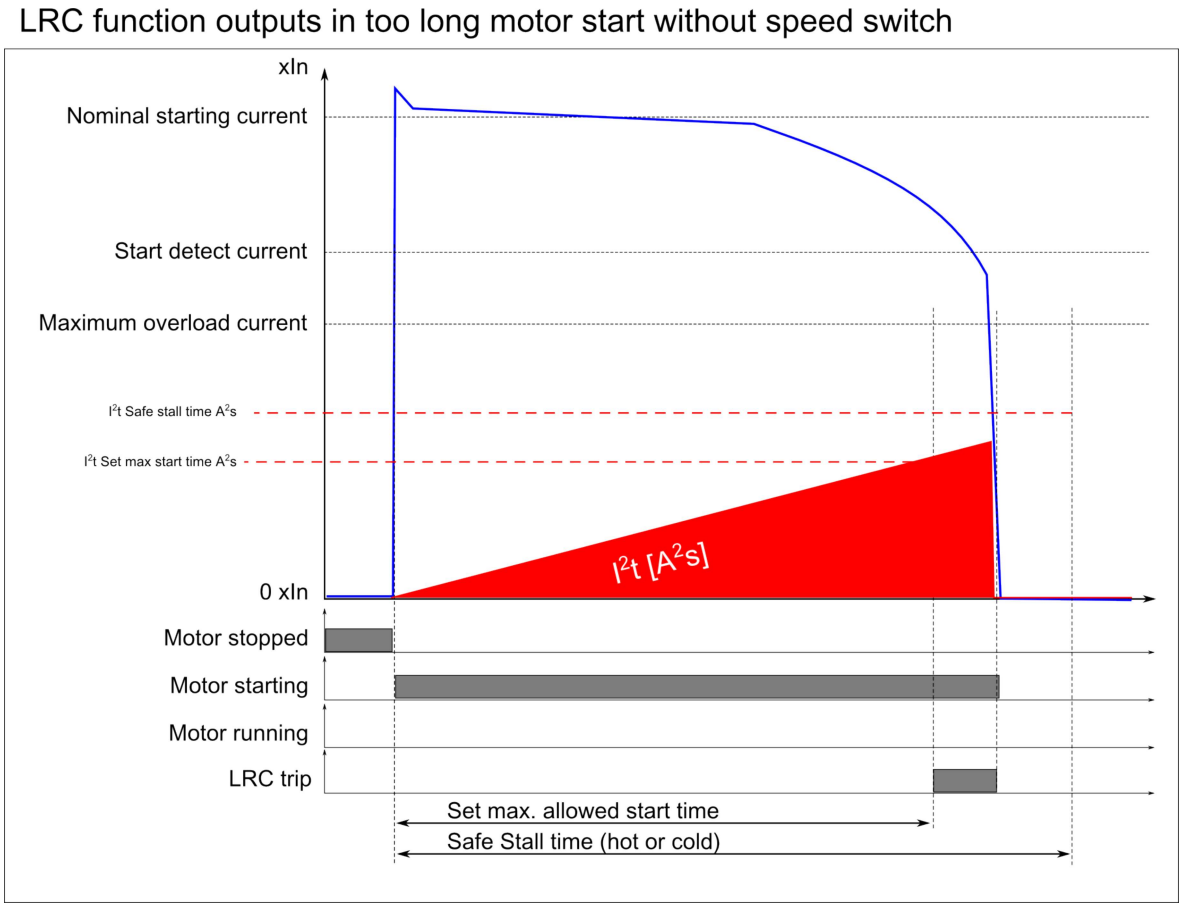

There are many reasons why the motor starting takes too long. These include problems in the drive or in the application. There may also be an issue with the feeding network: if the started motor is very large and the feeding network is weak, its voltage may drop and therefore the motor cannot provide the needed torque for normal starting, resulting in a prolonged start-up situation. This is why the I^2t mode is suggested as it can compensate for the voltage drop by taking the lower starting current caused by the lower voltage into account. If definite time is preferred for the Ist> function, it may cause a situation where the starting is well in action but the user-allowed time is spent due to the lower current and lower torque caused by the network's low voltage. In this case the function may trip before the starting is over eventhough the motor is not yet stressed too much and could still continue the starting.

A speed switch –if available in the application– activates when the motor shaft rotates or accelerates, and it can be used to give the motor additional time for starting beyond the set maximum starting duration. If the speed switch is in use while a similar situation happens (that is, that the motor starting is taking longer than it should), the speed switch ensures that the start-up of the motor is still going fine and the function lets the starting process continue.

Figure. 4.5.37 - 200. Outputs in long motor starting, with a speed switch.

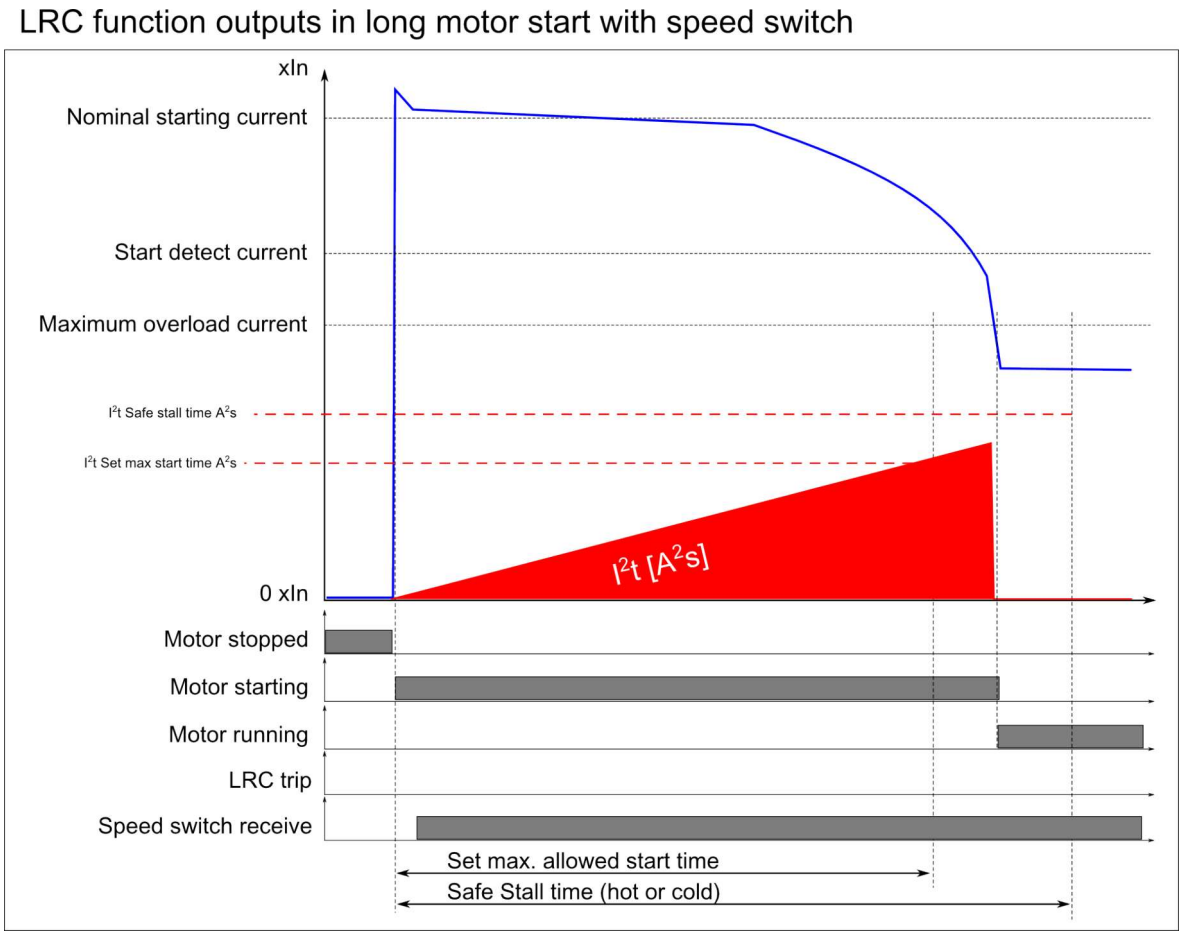

The speed switch is also useful when the motor start is naturally very long due to a high accelerating mass. In such applications a speed switch is required to know whether the start-up is actually happening, or whether the load is jammed and the motor is standing still with its rotor locked.

If the motor start-up with a speed switch exceeds the allowed safe stall time of the motor specifications, the function trips.

© Arcteq Relays Ltd

Figure. 4.5.37 - 201. Outputs when motor starting takes too long, with a speed switch.

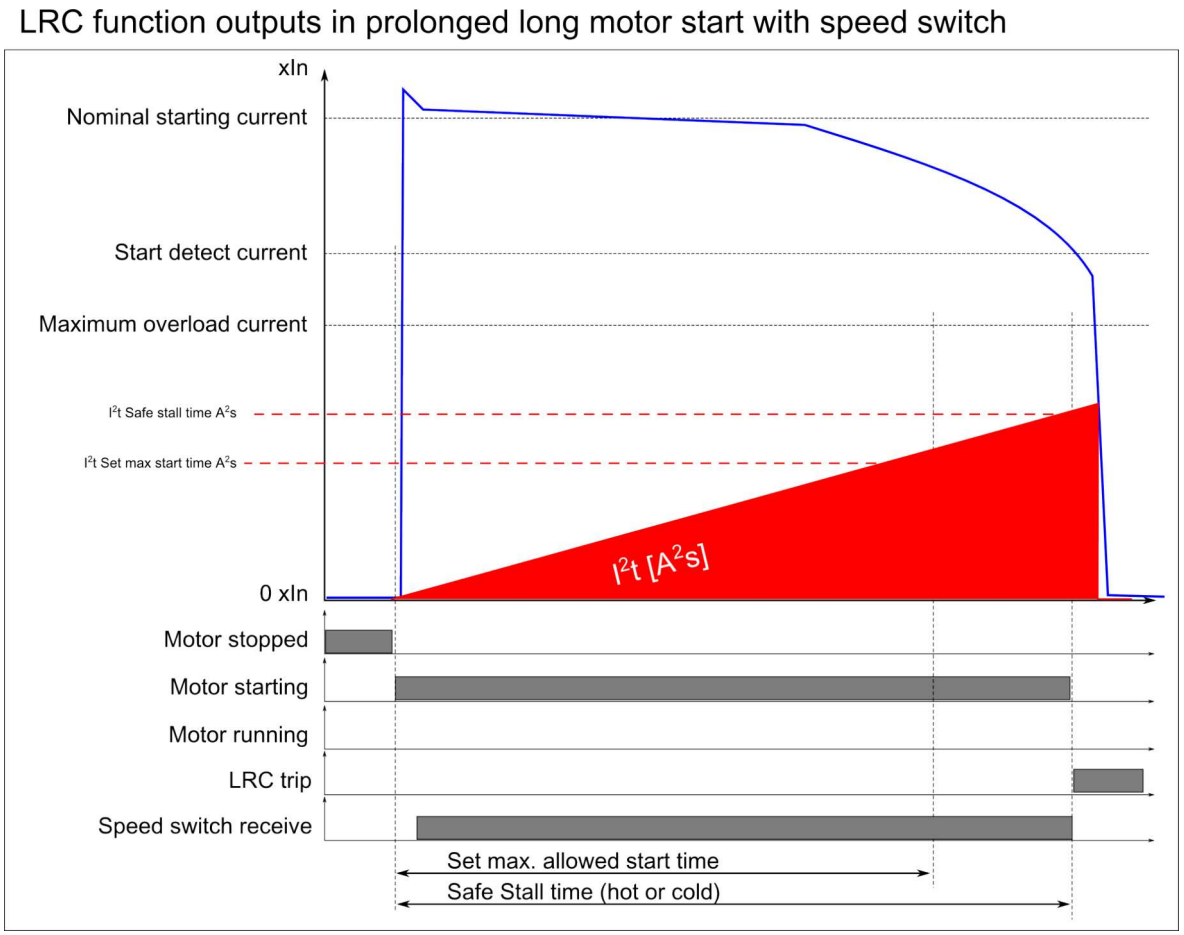

If the starting condition lasts longer than the safe stall time that has been set, the function trips the breaker. In this case the motor is either too small to accelerate within the give time frame or there is a problem with the load eventhough the motor is able to rotate. Letting the starting progress would endanger the motor.

The function can be set to monitor the situation if the motor stalls after it has started. There are the signals ("Mechanical jam" and "Motor stalled") available In the motor protection module, and both can be used to direct the tripping of the motor.

When the Ist> function is in stall detection and monitor mode, it uses the same default settings for the motor stall than for the starting conditions. The function monitors either given definite time, or the I^2t value and the speed switch input. If given time is exceeded during the stall time the function initiates tripping of the motor from the stall condition.

Figure. 4.5.37 - 202. Motor stall monitoring.

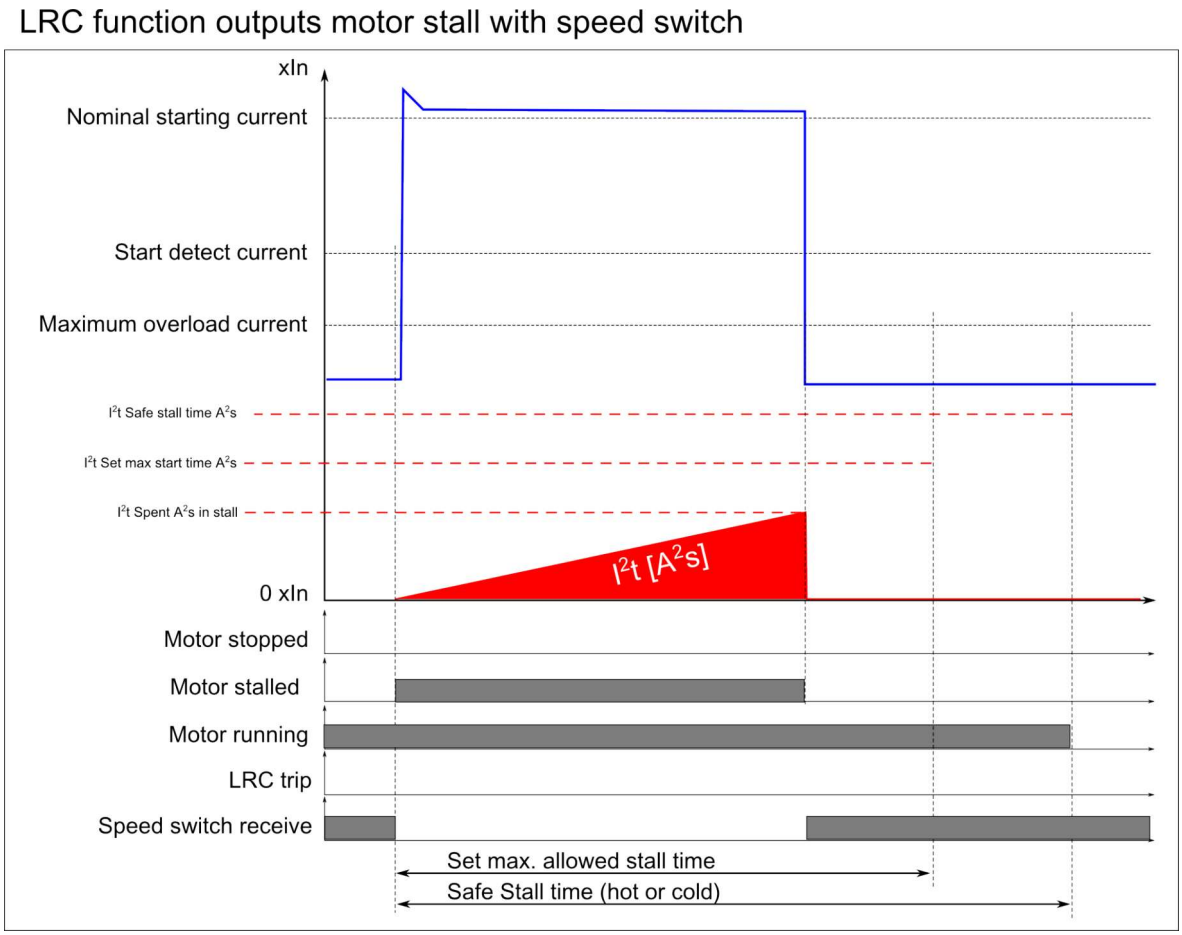

Settings and signals

The settings of the motor start/locked rotor monitoring function are mostly shared with other motor protection functions in the device's motor module. The following table shows the motor data settings of the Ist> function.

Table. 4.5.37 - 411. Basic settings of the motor start/locked rotor monitoring function

Name	Range	Step	Default	Description
ISt> force status to	• Normal • Start • Set time Trip • M cap Trip • Blocked	-	Normal	Force the status of the function. Visible only when *Enable stage forcing* parameter is enabled in *General* menu.
ISt> LN mode	• On • Blocked • Test • Test/ Blocked • Off	-	On	Set mode of LCR block. This parameter is visible only when *Allow setting of individual LN mode* is enabled in *General* menu.

© Arcteq Relays Ltd

Name	Range	Step	Default	Description
ISt> LN behaviour	• On • Blocked • Test • Test/ Blocked • Off	-	-	Displays the mode of LCR block. This parameter is visible only when *Allow setting of individual LN mode* is enabled in *General* menu.
Motor Start	• DOL • Y-delta • Soft start	-	DOL	The motor starting mode selection. The user can select between direct-on-line (DOL), Star-Delta and Soft start in future releases.
Motor In Scaled	0.1...40.0xI_n	0.1xI_n	-	The motor's nominal current scaled to per unit. If the user selects *Object In* in the CT settings, this value should be 1.00. If scaled to the CT nominal, this value may vary.
Motor In A	0.1...5000A	0.1A	-	The motor's nominal current in amperes.
Nominal starting current	0.1…40.0xI_n	0.1xI_n	6.0xI_n	The motor's locked rotor current with the nominal voltage. This setting is used for automatic curve selection and calculation. Also, the nominal starting capacity calculation is based on this value.
Nominal starting current A	0.1...5000A	0.1A	-	The motor's locked rotor current in amperes.
Start detect current	0.1…40.0xI_n	0.1xI_n	1.5xI_n	The motor starting current detection limit. When in DOL or Star-Delta mode, this setting defines the motor starting moment when the measured current exceeds both the no-load current limit and the start detect current limit within a ten-millisecond period. If the current increases slower, it is not defined as a motor start.
Start detect current A	0.1...5000A	0.1A	-	The motor's starting current detection limit in amperes.
Min locked rotor current	0.1…40.0xI_n	0.1xI_n	3.5xI_n	The motor's minimum locked rotor current. This setting defines the current limit for when this current is exceeded while the automatic curve selection and the control only short time constant (stall) are in use.
Min locked rotor current A	0.1...5000A	0.1A	-	The motor's minimum locked rotor current. This setting defines the current limit for when this current is exceeded while the automatic curve selection and the control only short time constant (stall) are in use.
Max locked rotor current	0.1…40.0xI_n	0.1xI_n	7.5xI_n	Maximum locked rotor current of the motor. This setting defines the current limit which is maximum current for the motor to draw in locked rotor situation (starting or stalled). If the measured current exceeds this setting limit it is considered to be overcurrent fault and corresponding measures can be applied to disconnect the feeder and motor from the supply.
Max locked rotor current A	0.1...5000A	0.1A	-	The maximum locked rotor current in amperes.

Name	Range	Step	Default	Description
Max overload current	0.1…40.0xI_n	0.1xI_n	2.0xI_n	The motor's maximum overload current. Exceeding this setting stalls the motor. This setting defines when the thermal replica switches to the short (stall) time constant. As long as the current stays below this setting value, the motor should run even when overloaded.
Max overload current A	0.1...5000A	0.1A	-	The motor's maximum overload current in amperes.
Hot condition theta limit	0.0…100.0%	0.1%	70%	Setting the motor's thermal limit for hot and cold situations. When this setting value is not exceed while a locked rotor situation occurs, the function uses a cold stall curve adjusted with the actually used thermal capacity. The function uses a hot stall curve when this setting value is exceeded. This hot/cold selection also applies to starts. Please note that using this setting requires that the Machine thermal overload protection (Tm>) function is activated and in use.
Safe stall time cold	0.1…600.0s	0.1s	20.0s	The safe stall time when the motor is cold. Unless this value is specified, it is set to be equal to the hot stall time. Most probably this leads to overprotection with the cold motor stall (best case scenario). This setting value is used for the cold thermal stall curve selection in automatic control. This parameter is also used in the motor start-up and the number of starts calculations.
Safe stall time hot	0.1…600.0s	0.1s	15.0s	The safe stall time when the motor is hot. This setting value is used for the hot thermal stall curve selection in automatic control. This parameter is also used in the motor start-up and the number of starts calculations.

Table. 4.5.37 - 412. Settings of the Ist> function.

Name	Range	Step	Default	Description
Starting time	0.000…1800.000s	0.005s	0.040s	Motor starting time the user sets. This setting should include the expected normal starting time of the protected motor as well as the operating marginal.
Definite time or I^2t	• Definite • I^2t mode	-	Definite	Selection of the operating mode. If the I^2t mode is selected, the function monitors the heating effect as a function of the measured current. In the Definite time mode, the function only monitors the start/stall signal duration and compares it to the "Starting time" setting.
Speed switch in use	• No • Yes	-	No	Selection of whether or not the speed switch is used in the application.
Speed SW wait time	0.000…1800.000s	0.005s	0.040s	The setting which determines how long the function waits for the speed switch to give a signal since the starting of the motor. If the speed switch is not activated during this set time, the starting of the motor is halted. This setting is visible only if the "Speed switch in use" setting is active.
Speed SW NO/ NC	• NO • NC	-	NO	The polarity of the speed switch signal, normally open ("NO") or normally closed ("NC"). This setting is visible only if the "Speed switch in use" setting is active.

© Arcteq Relays Ltd

Name	Range	Step	Default	Description
Operating mode	• Starts only • Starts and stall	-	Starts only	Operating mode selection of the function. This setting defines whether the function monitors only the start-up conditions of the motor, or both the start-up and stall conditions of the motor.

Table. 4.5.37 - 413. Output signals of the Ist> function.

Name	Description
Ist> START	The START output of the function. This signal activates when the starting conditions are met and the function is about to initiate a trip after the time calculation is finished.
Ist> Set time TRIP	Activates when motor starting time exceeds the "Starting time" set in the ISt> function.
ISt> Machine cap.TRIP	Activates when starting/stalling time exceeds hot/cold Safe stall time (set in machine thermal overload protection function).
Ist> BLOCKED	The BLOCKED output of the function. This signal activates when the START output is activated but the function is blocked from operating normally.

Function blocking

The blocking signal is evaluated at the start of each program cycle. The blocking signals are connected to the function's dedicated input, which can be configured in the *IO → Blocking Input Control* tab of the function.

- When the pick-up element activates and the blocking signal is not active, a START signal is generated, and the function starts or continues with the trip time countdown.
- When the pick-up element activates and the blocking signal is active, a BLOCKED signal is generated, and the function does not process the event further.
- When a START signal is already active and the blocking input signal becomes active, the START signal is reset and BLOCKED signal is generated. The release time characteristics are then processed in the same way as when the pick-up signal is reset.

The blocking signal needs to reach the device minimum of 5 ms before the set operating delay has passed in order for the blocking to activate in time.

Events and registers

The motor start/locked rotor monitoring function (abbreviated "LCR" in event block names) generates events and registers from the status changes in the events listed below. The user can select which event messages are stored in the main event buffer: ON, OFF, or both. The events triggered by the function are recorded with a time stamp.

The function's output can be used for direct I/O controlling and user logic programming.

Table. 4.5.37 - 414. Event messages.

Event block name	Event names
LCR1	Max. Start time exceed ON/OFF
LCR1	Set start time exceed ON/OFF

Event block name	Event names
LCR1	Speed Switch not received ON/OFF
LCR1	Start ON/OFF
LCR1	Set time Trip ON/OFF
LCR1	Max cap Trip ON/OFF
LCR1	Blocked ON/OFF

The function registers its operation into the last twelve (12) time-stamped registers. The table below presents the structure of the function's register content.

Table. 4.5.37 - 415. Register content.

Register	Description
Date and time	dd.mm.yyyy hh:mm:ss.mss
Event	Event name
Start/Stall time	Recorded duration of stall/start
Set time used	Percentage used from user set max time
Thermal cap. used	Thermal capacity used
L1 current	Phase L1 current x I_n
L2 current	Phase L2 current x I_n
L3 current	Phase L3 current x I_n
Setting group in use	Used setting group

4.5.38 Frequent start protection (N>; 66)

The frequent start protection function is used for monitoring and preventing the starting of the motor to happen too frequently. This function monitors the number of the starts the motor has used within a given time frame to ensure that the start stress does not exceed the limits stated by the manufacturer. The start-up situation is most stressful normal operation situation for motors that are started with Direct On Line; the manufacturer gives safe start limits with a specified time frame for both cold and hot motors in order to guarantee the motor's lifetime. Usually the manufacturers also specify the time between consequent starts. When a set number of starts have been used or a new start or start attempt is made too quickly after the previous start or start attempt, further starting attempts should be blocked by using the N> function, thus allowing the motor to cool down sufficiently before the next start attempt.

The frequent start protection function in a motor protection module operates with the motor status monitoring function and follows the motor data set there. Motor starting is monitored internally (MST signal out) in the N> function. The user only needs to activate the N> function and then do the following: set the number of allowed starts for hot and cold situations, set the minimum time between consequent starts, and set the limits of "Hot" and "Cold" situations. The thermal overload function also needs to be activated and set, if the user wants to use the hot and cold motor status separation.

© Arcteq Relays Ltd

The operating principle of the frequent start protection function is to calculate an equivalent start stress in each start; the calculation is based on the set starts per hour and the safe stall time settings (hot and cold) regardless of the actual start duration. In each start attempt the function does the following calculation: a time equal to the safe stall time and is added to the starts counter, and the quotient of the safe stall time divided by the set starts time (in hours) is then subtracted from this sum. This way the start counter can be applied to follow the motor's thermal status and the number of starts per hour accurately.

Figure. 4.5.38 - 203. Updating the function's start counter (image not to scale with regard to time).

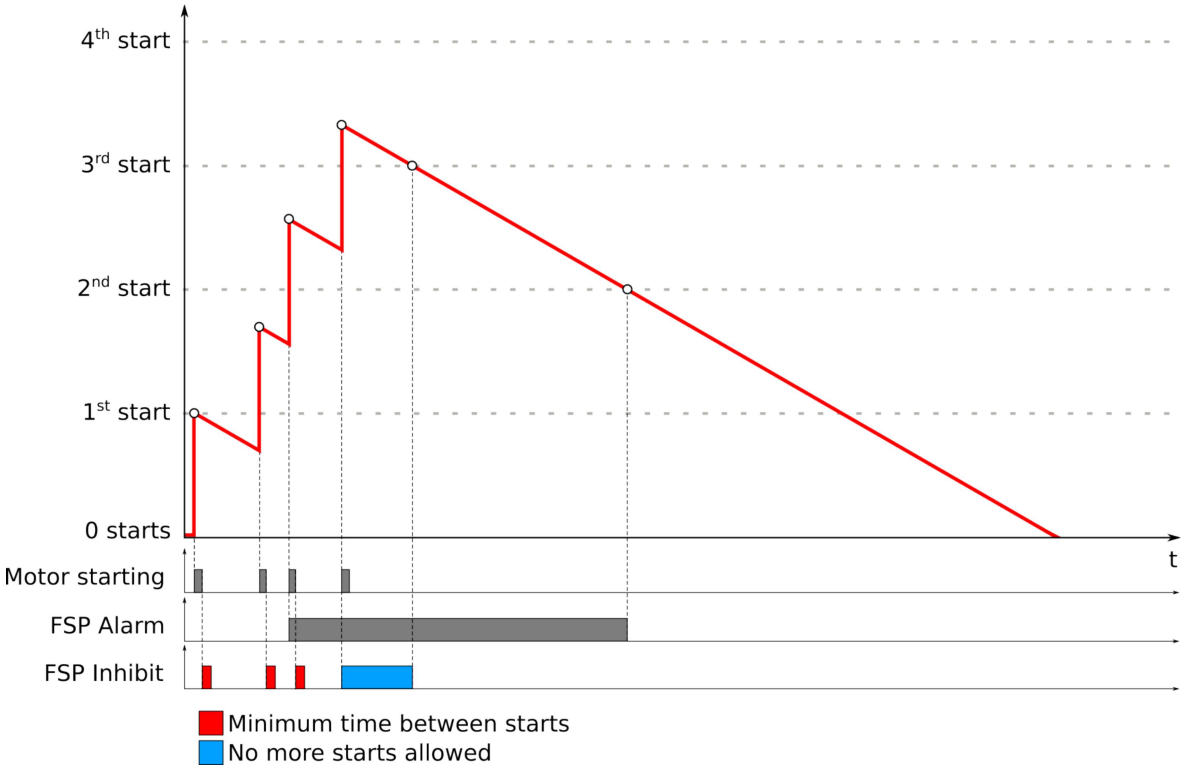

In the example above the motor is allowed four starts within a specific time frame (*t*): the motor is started four times and the counter is updated accordingly. The function's alarm activates after the third start to indicate that only one more start is allowed. Once this start is used the function's restart inhibit is activated and it stays active until the motor can be started again.

The cumulative start-up counter is updated constantly in each program cycle, and the function shows the inhibit and alarm time as well as the number of used and available starts. The counter is updated in every start: the counter is increased by the product of the safe stall time multiplied by the nominal start-up current. In each start the counter is increased by this product which is then in every cycle deduct by starts/given time divided by program cycle time. This way the start-up counter can be precisely set for each motor.

Figure. 4.5.38 - 204. Updating the starts counter when thermal hot and cold status taken into consideration.

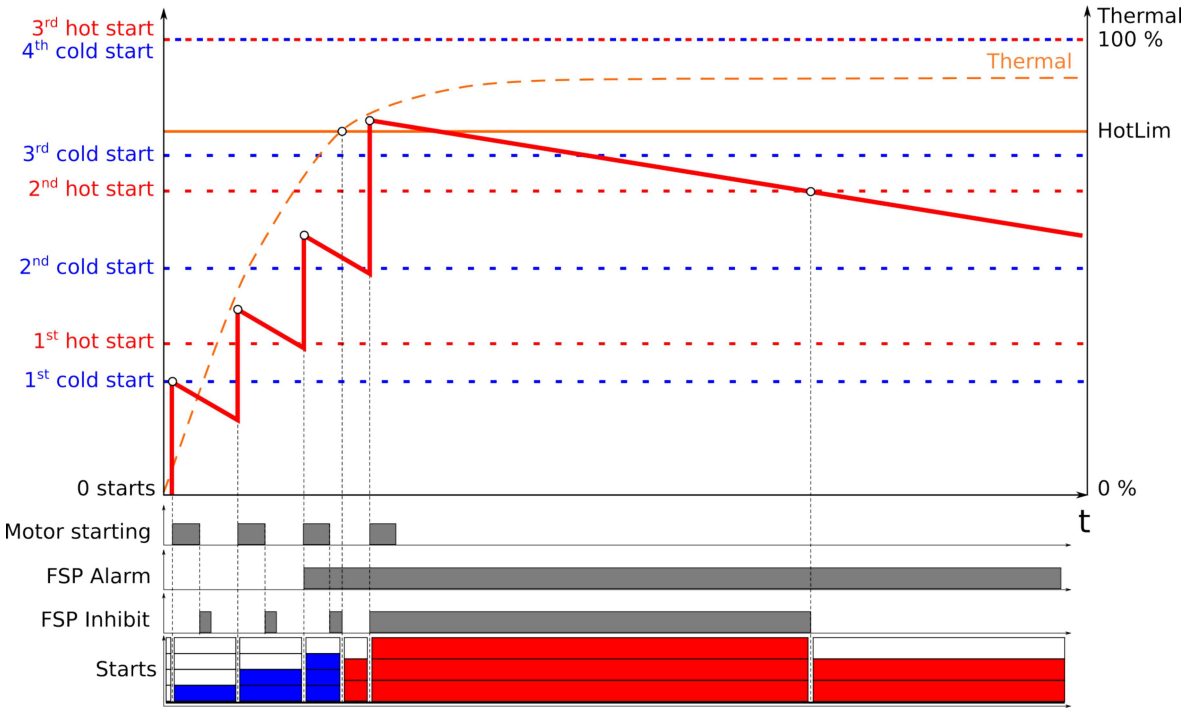

If a motor's thermal load is monitored, a correct number of starts can be allowed for the motor when the device can update the available starts online and precisely monitor the motor's status. In the example figure above, the motor is allowed four (4) starts when it is cold, and three (3) starts when it is hot. In the figure's situation the motor has been started three times cold and the hot limit is reached before the motor has started for the fourth time. Due to the three cold starts the counter only allows for one more start, as the motor has already been started three times cold. While the thermal status is "hot", the restart inhibit is activated and the start cooling time is counted according to the reduction rate for hot starts. Now, if the motor were stopped in this situation, the starts reduction would be counted according to "cold" motor status as the thermal load would reduce the count below the "hot" limit.

General settings

The following general settings define the general behavior of the function. These settings are static i.e. it is not possible to change them by editing the setting group.

Table. 4.5.38 - 416. General settings of the function.

Name	Range	Default	Description
N> LN mode	• On • Blocked • Test • Test/ Blocked • Off	On	Set mode of FSP block. This parameter is visible only when *Allow setting of individual LN mode* is enabled in *General* menu.

Read-only parameters

The function's *Info* page displays useful, real-time information on the state of the protection function. It is accessed either through the device's HMI display, or through the setting tool software when it is connected to the device and its Live Edit mode is active.

© Arcteq Relays Ltd

Table. 4.5.38 - 417. Information displayed by the function.

Name	Range	Description
N> LN behaviour	• On • Blocked • Test • Test/ Blocked • Off	Displays the mode of FSP block. This parameter is visible only when *Allow setting of individual LN mode* is enabled in *General* menu.
N> condition	• Normal • Start • Trip • Blocked	Displays the status of the protection function.

Settings and signals

The settings of the frequent start protection are the directly stated motor data from the device's motor module. The following table shows the other functions that also use these settings. If these settings are edited through the frequent start protection function's setting view, they change in all other mentioned functions at the same time.

Table. 4.5.38 - 418. Motor data settings.

Name	Range	Step	Default	Description
Hot condition theta limit	0.0…100.0%	0.1%	70%	Setting the motor's thermal limit in a hot or a cold situation. When this setting value is not exceed while a locked rotor situation occurs, the function uses a cold stall curve adjusted with the actually used thermal capacity. The function uses a hot stall curve when this setting value is exceeded. This setting also applies to starts when the hot/cold selection is in use. Please note that using this setting requires that the Machine thermal overload protection (Tm>) function is activated and in use.
Safe stall time cold	0.1…600.0s	0.1s	20.0s	The safe stall time when the motor is cold. Unless this value is specified, it is set to be equal to the hot stall time. Most probably this leads to overprotection with the cold motor stall (best case scenario). This setting value is used for the cold thermal stall curve selection in automatic control. This parameter is also used in the motor start-up and the number of starts calculations.
Safe stall time hot	0.1…600.0s	0.1s	15.0s	The safe stall time when the motor is hot. This setting value is used for the hot thermal stall curve selection in automatic control. This parameter is also used in the motor start-up and the number of starts calculations.
Starts when cold	1…100	1	3	The number of allowed starts per x hours for a cold motor.
Starts when hot	1…100	1	2	The number of allowed starts per x hours for a hot motor.
Starts in hours	1…100h	1h	1h	The number of hours when the parameters of the number of allowed starts (hot and cold) apply.

Name	Range	Step	Default	Description
Min time betw. starts	0.1…600.0s	0.1s	20.0s	The minimum time between starts or start attempts.

Table. 4.5.38 - 419. Output signals of the N> function.

Name	Description
N> Alarm on	Alarm output of the function. This signal activates when there is one (1) start available for the motor.
N> Inhibit on	Inhibit output of the function. This signal activates when all available starts have been used and the motor is not allowed to start before the starts counter has one (1) or more starts available.
N> BLOCKED	Blocked output of the function. This signal activates when the function is activated but is blocked from operating normally.

Function blocking

The blocking signal is evaluated at the start of each program cycle. The blocking signals are connected to the function's dedicated input, which can be configured in the *IO → Blocking Input Control* tab of the function.

- When the pick-up element activates and the blocking signal is not active, a START signal is generated, and the function starts or continues with the trip time countdown.
- When the pick-up element activates and the blocking signal is active, a BLOCKED signal is generated, and the function does not process the event further.
- When a START signal is already active and the blocking input signal becomes active, the START signal is reset and BLOCKED signal is generated. The release time characteristics are then processed in the same way as when the pick-up signal is reset.

The blocking signal needs to reach the device minimum of 5 ms before the set operating delay has passed in order for the blocking to activate in time.

Events and registers

The frequent start protection function (abbreviated "FSP" in event block names) generates events and registers from the status changes in the events listed below. The user can select which event messages are stored in the main event buffer: ON, OFF, or both. The events triggered by the function are recorded with a time stamp.

The function's output can be used for direct I/O controlling and user logic programming.

Table. 4.5.38 - 420. Event messages.

Event block name	Event names
FSP1	Alarm ON/OFF
FSP1	Inhibit ON/OFF
FSP1	Blocked ON/OFF

The function registers its operation into the last twelve (12) time-stamped registers. The table below presents the structure of the function's register content.

© Arcteq Relays Ltd

Table. 4.5.38 - 421. Register content.

Register	Description
Date and time	dd.mm.yyyy hh:mm:ss.mss
Event	Event name
Inhibit time on	If on, it shows how long the inhibit is active
Time since last start	Time elapsed from last starting
Start count	Starts used at the triggering moment

4.5.39 Non-directional undercurrent protection (I<; 37)

The non-directional undercurrent function is used for instant and time-delayed undercurrent protection. The operating decisions are based on phase current magnitude, constantly measured by the function.

Measured input

The function block uses fundamental frequency component of phase current measurement values.

Table. 4.5.39 - 422. Measurement inputs of the I< function.

Signal	Description
I_{L1}RMS	Fundamental frequency component of phase L1 (A) current
I_{L2}RMS	Fundamental frequency component of phase L2 (B) current
I_{L3}RMS	Fundamental frequency component of phase L3 (C) current

General settings

The following general settings define the general behavior of the function. These settings are static i.e. it is not possible to change them by editing the setting group.

Table. 4.5.39 - 423. General settings of the function.

Name	Range	Default	Description
I< LN mode	• On • Blocked • Test • Test/ Blocked • Off	On	Set mode of NUC block. This parameter is visible only when *Allow setting of individual LN mode* is enabled in *General* menu.
I< force status to	• Normal • Start • Trip • Blocked	Normal	Force the status of the function. Visible only when *Enable stage forcing* parameter is enabled in *General* menu.

Name	Range	Default	Description
I< measurement side	• CT1 • CT2 • CT3	CT1	Defines which current measurement module is used by the function. This setting is available if the device has more than one current measurement module.

Pick-up settings

The I_{set} setting parameter controls the the pick-up of the I< function. This defines the minimum allowed measured current before action from the function. The function constantly calculates the ratio between the I_{set} and the measured magnitude (I_m) for each of the three phases. The reset ratio of 103 % is built into the function and is always relative to the I_{set} value. The setting value is common for all measured phases. When the I_m exceeds the I_{set} value (in single, dual or all phases) it triggers the pick-up operation of the function.

Setting group selection controls the operating characteristics of the function, i.e. the user or user-defined logic can change function parameters while the function is running.

Table. 4.5.39 - 424. Pick-up settings.

Name	Range	Step	Default	Description
I_{set}	0.10…40.00xI_n	0.01xI_n	0.5xI_n	Pick-up setting

Operating time characteristics for trip and reset

This function supports definite time delay (DT). For detailed information on these delay types please refer to the chapter "General properties of a protection function" and its section "Operating time characteristics".

Read-only parameters

The function's *Info* page displays useful, real-time information on the state of the protection function. It is accessed either through the device's HMI display, or through the setting tool software when it is connected to the device and its Live Edit mode is active.

Table. 4.5.39 - 425. Information displayed by the function.

Name	Range	Description
I< LN behaviour	• On • Blocked • Test • Test/Blocked • Off	Displays the mode of NUC block. This parameter is visible only when *Allow setting of individual LN mode* is enabled in *General* menu.
I< condition	• Normal • Start • Trip • Blocked	Displays status of the protection function.
Expected operating time	0.000...1800.000s	Displays the expected operating time when a fault occurs.

© Arcteq Relays Ltd

Function blocking

The blocking signal is evaluated at the start of each program cycle. The blocking signals are connected to the function's dedicated input, which can be configured in the *IO → Blocking Input Control* tab of the function.

- When the pick-up element activates and the blocking signal is not active, a START signal is generated, and the function starts or continues with the trip time countdown.
- When the pick-up element activates and the blocking signal is active, a BLOCKED signal is generated, and the function does not process the event further.
- When a START signal is already active and the blocking input signal becomes active, the START signal is reset and BLOCKED signal is generated. The release time characteristics are then processed in the same way as when the pick-up signal is reset.

The blocking signal needs to reach the device minimum of 5 ms before the set operating delay has passed in order for the blocking to activate in time.

Events and registers

The undercurrent function (abbreviated "NUC" in event block names) generates events and registers from the status changes in the events listed below. The user can select which event messages are stored in the main event buffer: ON, OFF, or both. The events triggered by the function are recorded with a time stamp.

The function outputs can be used for direct I/O controlling and user logic programming. The function also provides a resettable cumulative counter for the START, TRIP and BLOCKED events.

Table. 4.5.39 - 426. Event messages.

Event block name	Event names
NUC1	Start ON/OFF
NUC1	Trip ON/OFF
NUC1	Block ON/OFF

The function registers its operation into the last twelve (12) time-stamped registers. The register of the function records the ON event process data for START, TRIP or BLOCKED. The table below presents the structure of the function's register content.

Table. 4.5.39 - 427. Register content.

Register	Description
Date and time	dd.mm.yyyy hh:mm:ss.mss
Event	Event name
Fault type	L1-G…L1-L2-L3
Pre-trigger current	Start/Trip -20ms current
Fault current	Start/Trip current
Prefault current	Start -200ms current
Trip time remaining	0 ms...1800s

Register	Description
Setting group in use	Setting group 1...8 active

4.5.40 Mechanical jam protection (Im>; 51M)

The mechanical jam protection function is used for monitoring motor loading after motor starting. When a motor-run apparatus jams during its work load, this function can be used to disconnect the motor from the feeding network in order to avoid further damage to the motor drive. The function is active only after the motor has started, and it is blocked during motor starting. This is done through an internal connection of *Motor running* and through a *Motor starting* signal taken from the *Motor status monitoring* function. This function operates similarly to the motor starting/locked rotor function (Ist>; 48/14) although it operates on Definite Time delay and does not work during motor starting. Also, with the help of a dedicated locked rotor function and mechanical jam protection the user can divide all possible fault situations based on a quick definition of the fault types in function events. Additionally, the Ist> function's setup can be problematic with heavy inertia loads that experience a locked rotor situation during work load. Having separate functions for start-up and for mechanical jams divides the situations clearly; for example, the mechanical jam protection can be set to instant operation while the locked rotor function allows motor starting several tens of seconds.

Measured input

The function block uses fundamental frequency component of current measurement values.

Table. 4.5.40 - 428. Measurement inputs of the Im> function.

Signal	Description
I_{L1}RMS	Fundamental frequency component of L1 (A) current
I_{L2}RMS	Fundamental frequency component of L2 (B) current
I_{L3}RMS	Fundamental frequency component of L3 (C) current

General settings

The following general settings define the general behavior of the function. These settings are static i.e. it is not possible to change them by editing the setting group.

Table. 4.5.40 - 429. General settings of the function.

Name	Range	Default	Description
Im> LN mode	• On • Blocked • Test • Test/ Blocked • Off	On	Set mode of MJP block. This parameter is visible only when *Allow setting of individual LN mode* is enabled in *General* menu.
Im> force status to	• Normal • Start • Trip • Blocked	Normal	Force the status of the function. Visible only when *Enable stage forcing* parameter is enabled in *General* menu.

© Arcteq Relays Ltd

Name	Range	Default	Description
Im> measurement selection	• CT1 • CT2 • CT3	POW1	Defines which current measurement module is used by the function. This setting is available if the device has more than one current measurement module.

Pick-up settings

The I_{set} setting parameter controls the pick-up of the Im> function. This defines the maximum allowed measured current before action from the function. The function constantly calculates the ratio between the I_{set} and the measured magnitude (I_m) for each of the three phases. The reset ratio of 97 % is built into the function and is always relative to the I_{set} value. The setting value is common for all measured phases, and when the I_m exceeds the I_{set} value (in single, dual or all phases) it triggers the pick-up operation of the function.

Table. 4.5.40 - 430. Motor data settings.

Name	Range	Step	Default	Description
Motor In Scaled	0.1... 40.0xI_n	0.1xI_n	-	The motor's nominal current scaled to per unit. If the user selects *Object In* in the CT settings, this value should be 1.00. If scaled to the CT nominal, this value may vary.
Motor In A	0.1...5 000.0A	0.1A	-	The motor's nominal current in amperes.
Nominal starting current	0.1…40.0xI_n	0.1xI_n	6.0xI_n	The motor's locked rotor current with the nominal voltage. This setting is used for automatic curve selection and calculation. Also, the nominal starting capacity calculation is based on this value.
Nominal starting current A	0.1...5 000.0A	0.1A	-	The motor's locked rotor current in amperes.
Min locked rotor current	0.1…40.0xI_n	0.1xI_n	3.5xI_n	The motor's minimum locked rotor current. This setting defines the current limit for when this current is exceeded while the automatic curve selection and the control only short time constant (stall) are in use.
Min locked rotor current A	0.1...5 000.0A	0.1A	-	The motor's minimum locked rotor current. This setting defines the current limit for when this current is exceeded while the automatic curve selection and the control only short time constant (stall) are in use.
Max locked rotor current	0.1…40.0xI_n	0.1xI_n	7.5xI_n	Maximum locked rotor current of the motor. This setting defines the current limit which is maximum current for the motor to draw in locked rotor situation (starting or stalled). If the measured current exceeds this setting limit it is considered to be overcurrent fault and corresponding measures can be applied to disconnect the feeder and motor from the supply.
Max locked rotor current A	0.1...5 000.0A	0.1A	-	The maximum locked rotor current in amperes.

Name	Range	Step	Default	Description
Max overload current	0.1…40.0xI_n	0.1xI_n	2.0xI_n	The motor's maximum overload current. Exceeding this setting stalls the motor. This setting defines when the thermal replica switches to the short (stall) time constant. As long as the current stays below this setting value, the motor should run even when overloaded.
Max overload current A	0.1...5 000.0A	0.1A	-	The maximum overload current of the motor in amperes.
Hot condition theta limit	0.0…100.0%	0.1%	70%	Setting the motor's thermal limit in a hot or a cold situation. When this setting value is not exceed while a locked rotor situation occurs, the function uses a cold stall curve adjusted with the actually used thermal capacity. The function uses a hot stall curve when this setting value is exceeded. This setting also applies to starts when the hot/cold selection is in use. Please note that using this setting requires that the Machine thermal overload protection (Tm>) function is activated and in use.
Safe stall time cold	0.1…600.0s	0.1s	20.0s	The safe stall time when the motor is cold. Unless this value is specified, it is set to be equal to the hot stall time. Most probably this leads to overprotection with the cold motor stall (best case scenario). This setting value is used for the cold thermal stall curve selection in automatic control. This parameter is also used in the motor start-up and the number of starts calculations.
Safe stall time hot	0.1…600.0s	0.1s	15.0s	The safe stall time when the motor is hot. This setting value is used for the hot thermal stall curve selection in automatic control. This parameter is also used in the motor start-up and the number of starts calculations.

Setting group selection controls the operating characteristics of the function, i.e. the user or user-defined logic can change function parameters while the function is running.

Table. 4.5.40 - 431. Pick-up settings.

Name	Range	Step	Default	Description
I_{set}	0.10…40.00xI_n	0.10xI_n	6.00xI_n	Pick-up setting

Operating time characteristics for trip and reset

This function supports definite time delay (DT). For detailed information on these delay types please refer to the chapter "General properties of a protection function" and its section "Operating time characteristics".

Read-only parameters

The function's *Info* page displays useful, real-time information on the state of the protection function. It is accessed either through the device's HMI display, or through the setting tool software when it is connected to the device and its Live Edit mode is active.

© Arcteq Relays Ltd

Table. 4.5.40 - 432. Information displayed by the function.

Name	Range	Step	Description
Im> LN behaviour	• On • Blocked • Test • Test/Blocked • Off	-	Displays the mode of MJP block. This parameter is visible only when *Allow setting of individual LN mode* is enabled in *General* menu.
Im> condition	• Normal • Start • Trip • Blocked	-	Displays status of the protection function.
Expected operating time	0.000...1800.000s	0.005s	Displays the expected operating time when a fault occurs. When IDMT mode is used, the expected operating time depends on the measured highest phase current value. If the measured current changes during a fault, the expected operating time changes accordingly.
Time remaining to trip	-1800.000...1800.000s	0.005s	When the function has detected a fault and counts down time towards a trip, this displays how much time is left before tripping occurs.
I_{meas}/I_{set} at the moment	0.00...1250.00	0.01	The ratio between the highest measured phase current and the pick-up value.

Function blocking

The blocking signal is evaluated at the start of each program cycle. The blocking signals are connected to the function's dedicated input, which can be configured in the *IO → Blocking Input Control* tab of the function.

- When the pick-up element activates and the blocking signal is not active, a START signal is generated, and the function starts or continues with the trip time countdown.
- When the pick-up element activates and the blocking signal is active, a BLOCKED signal is generated, and the function does not process the event further.
- When a START signal is already active and the blocking input signal becomes active, the START signal is reset and BLOCKED signal is generated. The release time characteristics are then processed in the same way as when the pick-up signal is reset.

The blocking signal needs to reach the device minimum of 5 ms before the set operating delay has passed in order for the blocking to activate in time.

Events and registers

The load jam protection function (abbreviated "MJP" in event block names) generates events and registers from the status changes in the events listed below. The user can select which event messages are stored in the main event buffer: ON, OFF, or both. The events triggered by the function are recorded with a time stamp.

The function's outputs can be used for direct I/O controlling and user logic programming. The function also provides a cumulative counter for the START, TRIP and BLOCKED events.

Table. 4.5.40 - 433. Event messages.

Event block name	Event names
MJP1	Start ON/OFF
MJP1	Trip ON/OFF
MJP1	Block ON/OFF

The function registers its operation into the last twelve (12) time-stamped registers. The register of the function records the ON event process data for START, TRIP or BLOCKED. The table below presents the structure of the function's register content.

Table. 4.5.40 - 434. Register content.

Register	Description
Date and time	dd.mm.yyyy hh:mm:ss.mss
Event	Event name
Fault type	L1-G…L1-L2-L3
Pre-trigger current	Start/Trip -20ms current
Fault current	Start/Trip current
Prefault current	Start -200ms current
Trip time remaining	0 ms...1800s
Setting group in use	Setting group 1...8 active

4.5.41 Resistance temperature detectors (RTD)

Resistance temperature detectors (or RTDs) can be used to measure both temperatures of motors/generators and ambient temperatures. Typically an RTD is a thermocouple or of type PT100. Up to three (3) separate RTD modules based on an external Modbus are supported; each can hold up to eight (8) measurement elements. Up to two (2) separate RTD option cards are supported by this function. Sixteen (16) individual element monitors can be set for this alarm function, and each of those can be set to alarm two (2) separate alarms from one selected input. The user can set alarms and measurements to be either in degrees Celsius or Fahrenheit.

Settings

Table. 4.5.41 - 435. General settings of the function.

Name	Range	Default	Description
RTD LN mode	• On • Blocked • Test • Test/ Blocked • Off	On	Set mode of RTD block. This parameter is visible only when *Allow setting of individual LN mode* is enabled in *General* menu.

© Arcteq Relays Ltd

Name	Range	Default	Description
RTD LN behaviour	• On • Blocked • Test • Test/ Blocked • Off	-	Displays the mode of RTD block. This parameter is visible only when *Allow setting of individual LN mode* is enabled in *General* menu.

Setting up an RTD measurement, the user first needs to set the measurement module to scan the wanted RTD elements. A multitude of Modbus-based modules are supported. Communication requires bitrate, databits, parity, stopbits and Modbus I/O protocol to be set; this is done at *Communication → Connections*. Once communication is set, the wanted channels are selected at *Communication → Protocols → ModbusIO*. Then the user selects the measurement module from the three (3) available modules (A, B and C), as well as the poll address. Additionally, both the module type and the polled channels need to be set. When using a thermocouple module, the thermo element type also needs to be set for each of the measurement channels. Once these settings are done the RTDs are ready for other functions.

Table. 4.5.41 - 436. Function settings for Channel x (Sx).

Name	Range	Step	Default	Description
S1...S16 enable	No Yes	-	No	Enables/disables the selecion of sensor measurements and alarms.
S1...S16 module	• InternalRTD1 • InternalRTD2 • ExtModuleA • ExtModuleB • ExtModuleC	-	InternalRTD1	Selects the measurement module. Internal RTD modules are option cards installed to the device. External modules are Modbus based external devices.
S1...S16 channel	• Channel 0 • Channel 1 • Channel 2 • Channel 3 • Channel 4 • Channel 5 • Channel 6 • Channel 7	-	Channel 0	Selects the measurement channel in the selected module.
S1...S16 Deg C/Dec F	• Deg C • Deg F	-	Deg C	Selects the measurement temperature scale (Celsius or Fahrenheit).
S1...S16 Measurement	-	-	-	Displays the measurement value in the selected temperature scale.
S1...S16 Sensor	• Ok • Invalid	-	-	Displays the measured sensor's data validity. If the sensor reading has any problems, the sensor data is set to "Invalid" and the alarms are not activated.
S1...S16 Enable alarm 1	• Disable • Enable	-	Disable	Enables/disables the selection of Alarm 1 for the measurement channel x.
S1...S16 Alarm1 >/<	• > • <	-	>	Selects whether the alarm activates when measurement is above or below the pick-up setting value.

Name	Range	Step	Default	Description
S1...S16 Alarm1	-101.0…2000.0deg	0.1deg	0.0deg	Sets the pick-up value for Alarm 1. The alarm is activated if the measurement goes above or below this setting mode (depends on the selected mode in "Sx Alarm1 >/<").
S1...S16 sensor	• Ok • Invalid	-	-	Displays the measured sensor's data validity. If the sensor reading has any problems, the sensor data is set to "Invalid" and the alarms are not activated.
S1...S16 Enable alarm 2	• Disable • Enable	-	Disable	Enables/disables the selection of Alarm 2 for the measurement channel x.
S1...S16 Alarm2 >/<	• > • <	-	>	Selects whether the measurement is above or below the setting value.
S1...S16 Alarm2	-101.0…2000.0deg	0.1deg	0.0deg	Sets the value for Alarm 2. The alarm is activated if the measurement goes above or below this setting mode (depends on the selected mode in "Sx Alarm2 >/<").

Function can be set to monitor the measurement data from previously set RTD channels. A single channel can be set to have several alarms if the user sets the channel to multiple sensor inputs. In each sensor setting the user can select the monitored module and channel, as well as the monitoring and alarm setting units (°C or °F). The alarms can be enabled, given a setting value (in degrees), and be set to trigger either above or below the setting value. There are sixteen (16) available sensor inputs in the function. An active alarm requires a valid channel measurement. It can be invalid if communication is not working or if a sensor is broken.

When the RTDs have been set, the values can be read to SCADA (or some other control system). The alarms can also be used for direct output control as well as in logics.

Events

The resistance temperature detector function (abbreviated "RTD" in event block names) generates events and registers from the status changes in the events listed below. The user can select which event messages are stored in the main event buffer: ON, OFF, or both. The events triggered by the function are recorded with a time stamp.

The function's outputs can be used for direct I/O controlling and user logic programming. The function also provides a resettable cumulative counter for the ALARM events.

The function offers sixteen (16) independent stages; the events are segregated for each stage operation.

Table. 4.5.41 - 437. Event messages.

Event block name	Event names
RTD1	S1...S16 Alarm1 ON/OFF
RTD1	S1...S16 Alarm2 ON/OFF
RTD1	S1...S16 Meas Ok/Invalid

© Arcteq Relays Ltd

4.5.42 Programmable stage (PSx>/<; 99)

The programmable stage is a stage that the user can program to create more advanced applications, either as an individual stage or together with programmable logic. The device has ten programmable stages, and each can be set to follow one to three analog measurements. The programmable stages have three available pick up terms options: overX, underX and rate-of-change of the selected signal. Each stage includes a definite time delay to trip after a pick-up has been triggered.

The programmable stage cycle time is 5 ms. The pick-up delay depends on which analog signal is used as well as its refresh rate (typically under a cycle in a 50 Hz system).

The number of programmable stages to be used is set in the *INFO* tab. When this function has been set as "Activated", the number of programmable stages can be set anywhere between one (1) and ten (10) depending on how many the application needs. In the image below, the number of programmable stages have been set to two which makes PS1 and PS2 to appear. Inactive stages are hidden until they are activated.

Please note that setting the number of available stages does not activate those stages, as they also need to be enabled individually with the *PSx >/< Enabled* parameter. When enabled an active stage shows its current state (condition), the expected operating time and the time remaining to trip under the activation parameters. If a stage is not active the *PSx>/< condition* parameter will merely display “Disabled”.

Setting group selection controls the operating characteristics of the function, i.e. the user or user-defined logic can change function parameters while the function is running.

General settings

The following general settings define the general behavior of the function. These settings are static i.e. it is not possible to change them by editing the setting group.

Table. 4.5.42 - 438. General settings of the function.

Name	Range	Description
PSx >/< LN mode	• On • Blocked • Test • Test/ Blocked • Off	Set mode of PSx block. This parameter is visible only when *Allow setting of individual LN mode* is enabled in *General* menu.
PSx >/< LN behaviour	• On • Blocked • Test • Test/ Blocked • Off	Displays the mode of PSx block. This parameter is visible only when *Allow setting of individual LN mode* is enabled in *General* menu.
PSx >/< Available stages	1...10	Defines the available amount of stages.
PSx >/< Enabled	• Disabled • Enabled	Enables the stage.
PSx >/< Force status to	• Normal • Start • Trip • Blocked	Force the status of the function. Visible only when *Enable stage forcing* parameter is enabled in *General* menu.

Name	Range	Description
PSx >/< Measurement setting	• One magnitude comp • Two magnitude comp • Three magnitude comp	Defines how many measurement magnitudes are used by the stage.
PSx >/< Magnitude handling ("Two magnitude comp" selected)	Mag1 x Mag2	Multiplies Signal 1 by Signal 2. The comparison uses the product of this calculation.
	Mag1 / Mag2	Divides Signal 1 by Signal 2. The comparison uses the product of this calculation.
	Max (Mag1, Mag2)	The bigger value of the chosen signals is used in the comparison.
	Min (Mag1, Mag2)	The smaller value of the chosen signals is used in the comparison.
	Mag1 OR Mag2	Either of the chosen signals has to fulfill the pick-up condition. Both signals have their own pick-up setting.
	Mag1 AND Mag2	Both of the chosen signals have to fulfill the pick-up condition. Both signals have their own pick-up setting.
	Mag1 – Mag2	Subtracts Signal 2 from Signal 1. The comparison uses the product of this calculation.
PSx >/< Magnitude handling ("Three magnitude comp" selected)	Mag1 x Mag2 x Mag3	Multiplies Signals 1, 2 and 3. The comparison uses the product of this calculation.
	Max (Mag1, Mag2, Mag3);	The biggest value of the chosen signals is used in the comparison.
	Min (Mag1, Mag2, Mag3)	The smallest value of the chosen signals is used in the comparison.
	Mag1 OR Mag2 OR Mag3	Any of the signals fulfills the pick-up condition. Each signal has their own pick-up setting.
	Mag1 AND Mag2 AND Mag3	All of the signals need to fulfill the pick-up condition. Each signal has their own pick-up setting.
	(Mag1 OR Mag2) AND Mag3	Signals 1 OR 2 AND 3 need to fulfill the pick-up condition. Each signal has their own pick-up setting.
PSx Magnitude selection	• Currents • Voltages • Powers • Impedances and admittances • Others	Defines the measurement type used by the stage
PSx MagnitudeX	See table below.	Defines the measurement used by the stage. Available parameters depend on selected measurement type.

© Arcteq Relays Ltd

Name	Range	Description
PSx MagnitudeX multiplier	-5 000 000...5 000 000	Multiplies the selected measurement. 1 by default (no multiplication). See section "Magnitude multiplier" for more information.

Analog values

The numerous analog signals have been divided into categories to help the user find the desired value.

Table. 4.5.42 - 439. Phase and residual current measurements (IL1, IL2, IL3, Io1 and Io2)

Name	Description
ILx ff (p.u.)	Fundamental frequency RMS value (in p.u.)
ILx 2nd h.	ILx 2nd harmonic value (in p.u.)
ILx 3rd h.	ILx 3nd harmonic value (in p.u.)
ILx 4th h.	ILx 4nd harmonic value (in p.u.)
ILx 5th h.	ILx 5nd harmonic value (in p.u.)
ILx 7th h.	ILx 7nd harmonic value (in p.u.)
ILx 9th h.	ILx 9nd harmonic value (in p.u.)
ILx 11th h.	ILx 11nd harmonic value (in p.u.)
ILx 13th h.	ILx 13nd harmonic value (in p.u.)
ILx 15th h.	ILx 15nd harmonic value (in p.u.)
ILx 17th h.	ILx 17nd harmonic value (in p.u.)
ILx 19th h.	ILx 19nd harmonic value (in p.u.)
ILx TRMS	ILx TRMS value (in p.u.)
ILx Ang	ILx Angle (degrees)

Table. 4.5.42 - 440. Other current measurements

Name	Description
I0Z Mag	Zero sequence current value (in p.u.)
I0CALC Mag	Calculated I0 value (in p.u.)
I1 Mag	Positive sequence current value (in p.u.)
I2 Mag	Negative sequence current value (in p.u.)
I0CALC Ang	Angle of calculated residual current (degrees)

Name	Description
I1 Ang	Angle of positive sequence current (degrees)
I2 Ang	Angle of negative sequence current (degrees)
I01ResP	I01 primary current of a current-resistive component
I01CapP	I01 primary current of a current-capacitive component
I01ResS	I01 secondary current of a current-resistive component
I01CapS	I01 secondary current of a current-capacitive component
I02ResP	I02 primary current of a current-resistive component
I02CapP	I02 primary current of a current-capacitive component
I02ResS	I02 secondary current of a current-resistive component
I02CapS	I02 secondary current of a current-capacitive component

Table. 4.5.42 - 441. Voltage measurements

Name	Description
UL12Mag	UL12 Primary voltage V
UL23Mag	UL23 Primary voltage V
UL31Mag	UL31 Primary voltage V
UL1Mag	UL1 Primary voltage V
UL2Mag	UL2 Primary voltage V
UL3Mag	UL3 Primary voltage V
UL12Ang	UL12 angle (degrees)
UL23Ang	UL23 angle (degrees)
UL31Ang	UL31 angle (degrees)
UL1Ang	UL1 angle (degrees)
UL2Ang	UL2 angle (degrees)
UL3Ang	UL3 angle (degrees)
U0Ang	UL0 angle (degrees)
U0CalcMag	Calculated residual voltage
U1 pos.seq.V Mag	Positive sequence voltage
U2 neg.seq.V Mag	Negative sequence voltage
U0CalcAng	Calculated residual voltage angle (degrees)
U1 pos.seq.V Ang	Positive sequence voltage angle (degrees)

© Arcteq Relays Ltd

Name	Description
U2 neg.seq.V Ang	Negative sequence voltage angle (degrees)
U3SMag	U3 channel voltage magnitude when the channel is set to "SS" mode
U3SAng	U3 channel voltage angle when the channel is set to "SS" mode
U4SMag	U4 channel voltage magnitude when the channel is set to "SS" mode
U4SAng	U4 channel voltage angle when the channel is set to "SS" mode
T1 Tap U	Voltage measured by the AVR function in the T1 device (in parallel tap changer mode)
T2 Tap U	Voltage measured by the AVR function in the T2 device (in parallel tap changer mode)
T3 Tap U	Voltage measured by the AVR function in the T3 device (in parallel tap changer mode)
T4 Tap U	Voltage measured by the AVR function in the T4 device (in parallel tap changer mode)

Table. 4.5.42 - 442. Power measurements

Name	Description
S3PH	Three-phase apparent power S (kVA)
P3PH	Three-phase active power P (kW)
Q3PH	Three-phase reactive power Q (kvar)
tanfi3PH	Three-phase active power direction
cosfi3PH	Three-phase reactive power direction
SLx	Phase apparent power L1 / L2 / L3 S (kVA)
PLx	Phase active power L1 / L2 / L3 P (kW)
QLx	Phase reactive power L1 / L2 / L3 Q (kVar)
tanfiLx	Phase active power direction L1 / L2 / L3
cosfiLx	Phase reactive power direction L1 / L2 / L3

Table. 4.5.42 - 443. Phase-to-phase and phase-to-neutral impedances, resistances and reactances

Name	Description
RLxPri	Resistance R L12, L23, L31, L1, L2, L3 primary (Ω)
XLxPri	Reactance X L12, L23, L31, L1, L2, L3 primary (Ω)
ZLxPri	Impedance Z L12, L23, L31, L1, L2, L3 primary (Ω)
RLxSec	Resistance R L12, L23, L31, L1, L2, L3 secondary (Ω)
XLxSec	Reactance X L12, L23, L31, L1, L2, L3 secondary (Ω)
ZLxSec	Impedance Z L12, L23, L31, L1, L2, L3 secondary (Ω)

Name	Description
ZLxAngle	Impedance Z L12, L23, L31, L1, L2, L3 angle

Table. 4.5.42 - 444. Other impedances, resistances and reactances

Name	Description
RSeqPri	Positive Resistance R primary (Ω)
XSeqPri	Positive Reactance X primary (Ω)
RSeqSec	Positive Resistance R secondary (Ω)
XSeqSec	Positive Reactance X secondary (Ω)
ZSeqPri	Positive Impedance Z primary (Ω)
ZSeqSec	Positive Impedance Z secondary (Ω)
ZSeqAngle	Positive Impedance Z angle

Table. 4.5.42 - 445. Conductances, susceptances and admittances (L1, L2, L3)

Name	Description
GLxPri	Conductance G L1, L2, L3 primary (mS)
BLxPri	Susceptance B L1, L2, L3 primary (mS)
YLxPriMag	Admittance Y L1, L2, L3 primary (mS)
GLxSec	Conductance G L1, L2, L3 secondary (mS)
BLxSec	Susceptance B L1, L2, L3 secondary (mS)
YLxSecMag	Admittance Y L1, L2, L3 secondary (mS)
YLxAngle	Admittance Y L1, L2, L3 angle (degrees)

Table. 4.5.42 - 446. Other conductances, susceptances and admittances

Name	Description
G0Pri	Conductance G0 primary (mS)
B0Pri	Susceptance B0 primary (mS)
G0Sec	Conductance G0 secondary (mS)
B0Sec	Susceptance B0 secondary (mS)
Y0Pri	Admittance Y0 primary (mS)
Y0Sec	Admittance Y0 secondary (mS)
Y0Angle	Admittance Y0 angle

© Arcteq Relays Ltd
IM00099

Table. 4.5.42 - 447. Other measurements

Name	Description
System f.	System frequency
Ref f1	Reference frequency 1
Ref f2	Reference frequency 2
M Thermal T	Motor thermal temperature
F Thermal T	Feeder thermal temperature
T Thermal T	Transformer thermal temperature
RTD meas 1…16	RTD measurement channels 1…16
Ext RTD meas 1…8	External RTD measurement channels 1…8 (ADAM)
mA input 7,8,15,16	mA input channels 7, 8, 15, 16
ASC 1…4	Analog scaled curves 1…4

Magnitude multiplier

Programmable stages can be set to follow one, two or three analog measurements with the *PSx >/< Measurement setting* parameter. The user must choose a measurement signal value to be compared to the set value, and possibly also set a scaling for the signal. The image below is an example of scaling: a primary zero sequence voltage has been scaled to a percentage value for easier handling when setting up the comparator.

The scaling factor was calculated by taking the inverse value of a 20 kV system:

$$k = \frac{1}{20\,000\ \mathrm{V}/\sqrt{3}} = 0.008\,66$$

When this multiplier is in use, the full earth fault zero sequence voltage is 11 547 V primary which is then multiplied with the above-calculated scaling factor, inversing the final result to 100%. This way a pre-processed signal is easier to set, although it is also possible to just use the scaling factor of 1.0 and set the desired pick-up limit as the primary voltage. Similarly, any chosen measurement value can be scaled to the desired form.

Read-only parameters

The function's *Info* page displays useful, real-time information on the state of the protection function. It is accessed either through the device's HMI display, or through the setting tool software when it is connected to the device and its Live Edit mode is active.

Table. 4.5.42 - 448. Information displayed by the function.

Name	Range	Description
PSx >/< LN behaviour	• On • Blocked • Test • Test/Blocked • Off	Displays the mode of PSx block. This parameter is visible only when *Allow setting of individual LN mode* is enabled in *General* menu.

Name	Range	Description
Condition	• Normal • Start • Trip • Blocked	Displays status of the function.
Expected operating time	-1800.000...1800.000s	Displays the expected operating time when a fault occurs.
Time remaining to trip	0.000...1800.000s	When the function has detected a fault and counts down time towards a trip, this displays how much time is left before tripping occurs.
PSx Scaled magnitude X	-5 000 000...5 000 000	Displays measurement value after multiplying it the value set to *PSx Magnitude multiplier*.
PSx >/< MeasMag1/ MagSet1 at the moment	-5 000 000...5 000 000	The ratio between measured magnitude and the pick-up setting.
PSx >/< MeasMag2/ MagSet2 at the moment	-5 000 000...5 000 000	The ratio between measured magnitude and the pick-up setting.
PSx >/< MeasMag3/ MagSet3 at the moment	-5 000 000...5 000 000	The ratio between measured magnitude and the pick-up setting.
PSx >/< CalcMeasMag/ MagSet at the moment	-5 000 000...5 000 000	The ratio between calculated magnitude and the pick-up setting.

Pick-up settings

The *Pick-up setting Mag* setting parameter controls the pick-up of the PSx>/< function. This defines the maximum or minimum allowed measured magnitude before action from the function. The function constantly calculates the ratio between the set and the measured magnitudes. The user can set the reset hysteresis in the function (by default 3 %). It is always relative to the *Pick-up setting Mag* value.

Table. 4.5.42 - 449. Pick-up settings.

Name	Range	Step	Default	Description
PS# Pick-up term Mag#	• Over > • Over (abs) > • Under < • Under (abs) < • Delta set (%) +/- > • Delta abs (%) > • Delta +/- measval • Delta abs measval	-	Over	Comparator mode for the magnitude. See "Comparator modes" section below for more information.
PS# Pick-up setting Mag#/calc >/<	-5 000 000.0000…5 000 000.0000	0.0001	0.01	Pick-up magnitude

© Arcteq Relays Ltd

Name	Range	Step	Default	Description
PS# Setting hysteresis Mag#	0.0000…50.0000%	0.0001%	3%	Setting hysteresis
Definite operating time delay	0.000…1800.000s	0.005s	0.04s	Delay setting
Release time delays	0.000…1800.000s	0.005s	0.06s	Pick-up release delay

Comparator modes

When setting the comparators, the user must first choose a comparator mode.

Table. 4.5.42 - 450. Comparator modes

Mode	Description
Over >	Greater than. If the measured signal is greater than the set pick-up level, the comparison condition is fulfilled.
Over (abs) >	Greater than (absolute). If the absolute value of the measured signal is greater than the set pick-up level, the comparison condition is fulfilled.
Under <	Less than. If the measured signal is less than the set pick-up level, the comparison condition is fulfilled. The user can also set a blocking limit: the comparison is not active when the measured value is less than the set blocking limit.
Under (abs) <	Less than (absolute). If the absolute value of the measured signal is less than the set pick-up level, the comparison condition is fulfilled. The user can also set a blocking limit: the comparison is not active when the measured value is less than the set blocking limit.
Delta set (%) +/- >	Relative change over time. If the measured signal changes more than the set relative pick-up value in 20 ms, the comparison condition is fulfilled. The condition is dependent on direction.
Delta abs (%) >	Relative change over time (absolute). If the measured signal changes more than the set relative pick-up value in 20 ms in either direction, the comparison condition is fulfilled. The condition is not dependent on direction.
Delta +/- measval	Change over time. If the measured signal changes more than the set pick-up value in 20 ms, the comparison condition is fulfilled. The condition is dependent on direction.
Delta abs measval	Change over time (absolute). If the measured signal changes more than the set pick-up value in 20 ms in either direction, the comparison condition is fulfilled. The condition is not dependent on direction.

The pick-up level is set individually for each comparison. When setting up the pick-up level, the user needs to take into account the modes in use as well as the desired action. The pick-up limit can be set either as positive or as negative. Each pick-up level has a separate hysteresis setting which is 3 % by default.

The user can set the operating and releasing time delays for each stage.

Function blocking

The blocking signal is evaluated at the start of each program cycle. The blocking signals are connected to the function's dedicated input, which can be configured in the *IO → Blocking Input Control* tab of the function.

- When the pick-up element activates and the blocking signal is not active, a START signal is generated, and the function starts or continues with the trip time countdown.
- When the pick-up element activates and the blocking signal is active, a BLOCKED signal is generated, and the function does not process the event further.
- When a START signal is already active and the blocking input signal becomes active, the START signal is reset and BLOCKED signal is generated. The release time characteristics are then processed in the same way as when the pick-up signal is reset.

The blocking signal needs to reach the device minimum of 5 ms before the set operating delay has passed in order for the blocking to activate in time.

Events and registers

The programmable stage function (abbreviated "PSx" in event block names) generates events and registers from the status changes in the events listed below. The user can select which event messages are stored in the main event buffer: ON, OFF, or both. The events triggered by the function are recorded with a time stamp.

The function's outputs can be used for direct I/O controlling and user logic programming. The function also provides a resettable cumulative counter for the START, TRIP and BLOCKED events.

Table. 4.5.42 - 451. Event messages.

Event block name	Event names
PSx	PS1...10 >/< Start ON/OFF
PSx	PS1...10 >/< Trip ON/OFF
PSx	PS1...10 >/< Block ON/OFF

The function registers its operation into the last twelve (12) time-stamped registers. The register of the function records the ON event process data for START, TRIP or BLOCKED. The table below presents the structure of the function's register content.

Table. 4.5.42 - 452. Register content.

Register	Description
Date and time	dd.mm.yyyy hh:mm:ss.mss
Event	Event name
>/< Mag#	The numerical value of the magnitude
Mag#/Set#	Ratio between the measured magnitude and the pick-up setting
Trip time remaining	0 ms...1800s
Setting group in use	Setting group 1...8 active

© Arcteq Relays Ltd
IM00099

4.5.43 Arc fault protection (IArc>/I0Arc>; 50Arc/50NArc)

Arc faults occur for a multitude of reasons: e.g. insulation failure, incorrect operation of the protected device, corrosion, overvoltage, dirt, moisture, incorrect wiring, or even because of aging caused by electric load. It is important to detect the arc as fast as possible in order to minimize its effects. Using arc sensors to detect arc faults is much faster than merely measuring currents and voltages. In busbar protection devices with normal protection can be too slow to disconnect arcs within a safe time frame. For example, it may be necessary to delay operation time for hundreds of milliseconds when setting up an overcurrent protection relay to control the feeder breakers to achieve selectivity. This delay can be avoided by using arc protection. The arc protection card has a high-speed output to trip signals faster as well as to extend the speed of arc protection.

The arc protection card has four (4) sensor channels, and up to three (3) arc point sensors can be connected to each channel. The sensor channels support Arcteq AQ-01 (light detecting) and AQ-02 (pressure and light detecting) sensors. Optionally, the protection function can also be applied with a phase current or a residual current condition: the function trips only if the light and overcurrent conditions are met.

Table. 4.5.43 - 453. Output signals of the IArc>/I0Arc> function.

Outputs	Activation condition
Channel 1 Light In Channel 2 Light In Channel 3 Light In Channel 4 Light In	The arc protection card's sensor channel detects light.
ARC Binary input signal	The arc protection card's binary input is energized.
I/I0 Arc> Ph. curr. START I/I0 Arc> Res. curr. START	The measured phase current or the residual current is over the set limit.
I/I0 Arc> Ph. curr. BLOCKED I/I0 Arc> Res. curr. BLOCKED	The phase current or the residual current measurement is blocked by an input.
I/I0 Arc> Zone 1 TRIP I/I0 Arc> Zone 2 TRIP I/I0 Arc> Zone 3 TRIP I/I0 Arc> Zone 4 TRIP	All required conditions for tripping the zone are met (light OR light and current).
I/I0 Arc> Zone 1 BLOCKED I/I0 Arc> Zone 2 BLOCKED I/I0 Arc> Zone 3 BLOCKED I/I0 Arc> Zone 4 BLOCKED	All required conditions for tripping the zone are met (light OR light and current) but the tripping is blocked by an input.

Outputs	Activation condition
I/I0 Arc> S1 Sensor fault I/I0 Arc> S2 Sensor fault I/I0 Arc> S3 Sensor fault I/I0 Arc> S4 Sensor fault	The detected number of sensors in the channel does not match the settings.
I/I0 Arc> IO unit fault	The number of connected AQ-100 series units does not match the number of units set in the settings.

Example of scheme setting

The following examples helps the user better understand how the arc protection function is set. In the examples AQ-101 models are used to extend the protection of Zone 2 and to protect each outgoing feeder (Zone 3).

This scheme is a single-line diagram with a protection relay equipped with an arc protection option card at the incoming feeder and with AQ-101 arc protection relays installed to the outgoing feeders.

Figure. 4.5.43 - 205. Scheme with AQ-101 arc protection relays.

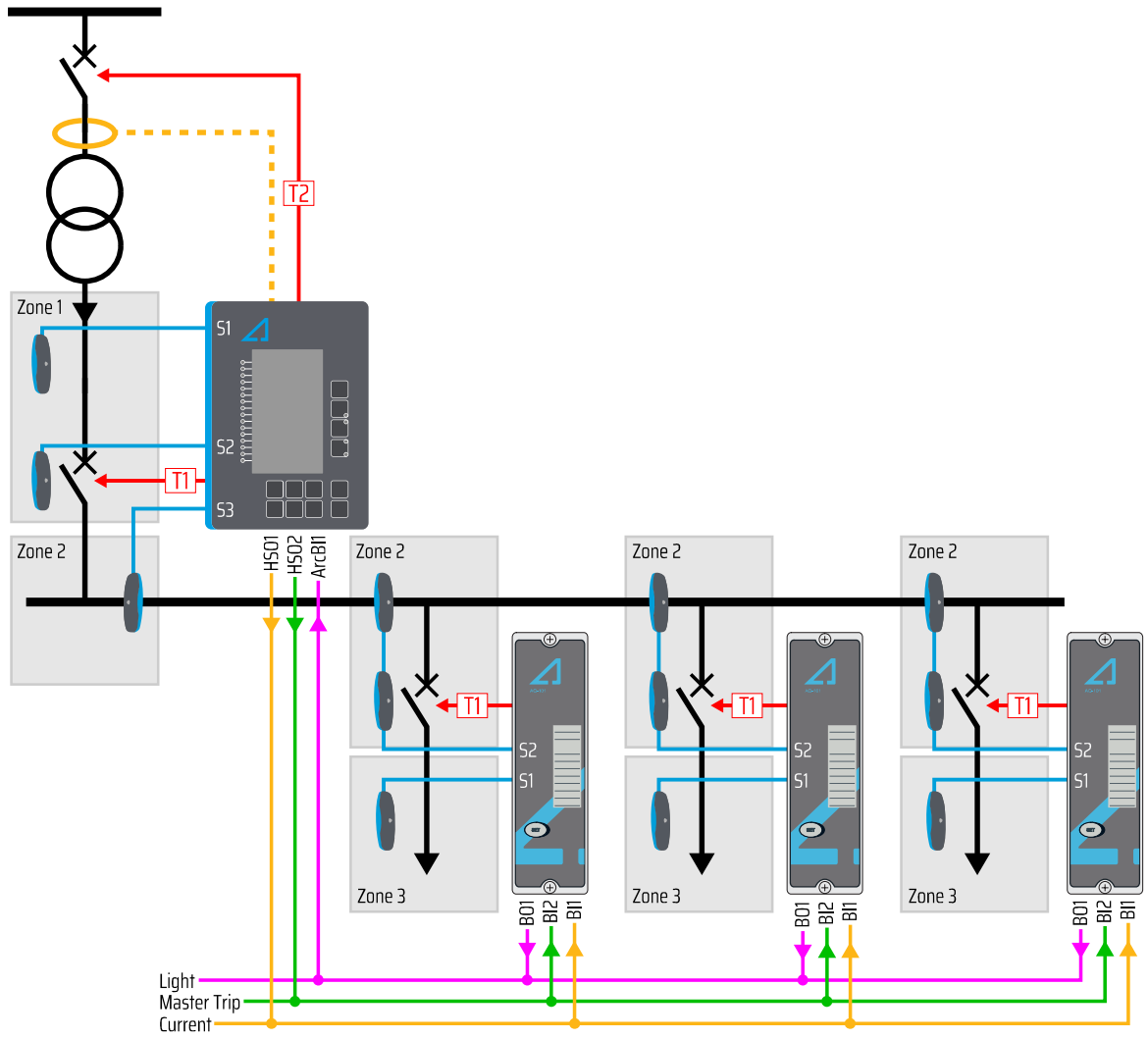

© Arcteq Relays Ltd

To set the zones for the device installed to the incoming feeder, start by enabling the protected zones (in this case, Zones 1 and 2). Then define which sensor channels are sensing which zones:

- Channel 1: Installed to incoming feeder cable compartment. Enabled in Zone 1.
- Channel 2: Installed to incoming feeder circuit breaker compartment. Enabled in Zone 1.
- Channel 3: Installed to busbar. Enabled in Zone 2.

The high-speed output contacts HSO1 and HSO2 have been set to send overcurrent and master trip signals to the AQ-101 arc protection relays. The AQ 100 series devices binary outputs (BO1) send test pulses once a second to check the health of the wiring between the AQ 100 series units and the binary input "ArcBI1" in the device installed to the incoming feeder. The parameter *I/I0 Arc> Self supervision test pulse* should be activated when connecting the AQ 100 series units to the main unit to prevent the pulses from activating ArcBI1.

The next example is similar to the previous one. However, this time each outgoing feeder has an AQ-ONE protection device instead of an AQ-101 arc protection relay.

Figure. 4.5.43 - 206. Scheme with protection devices.

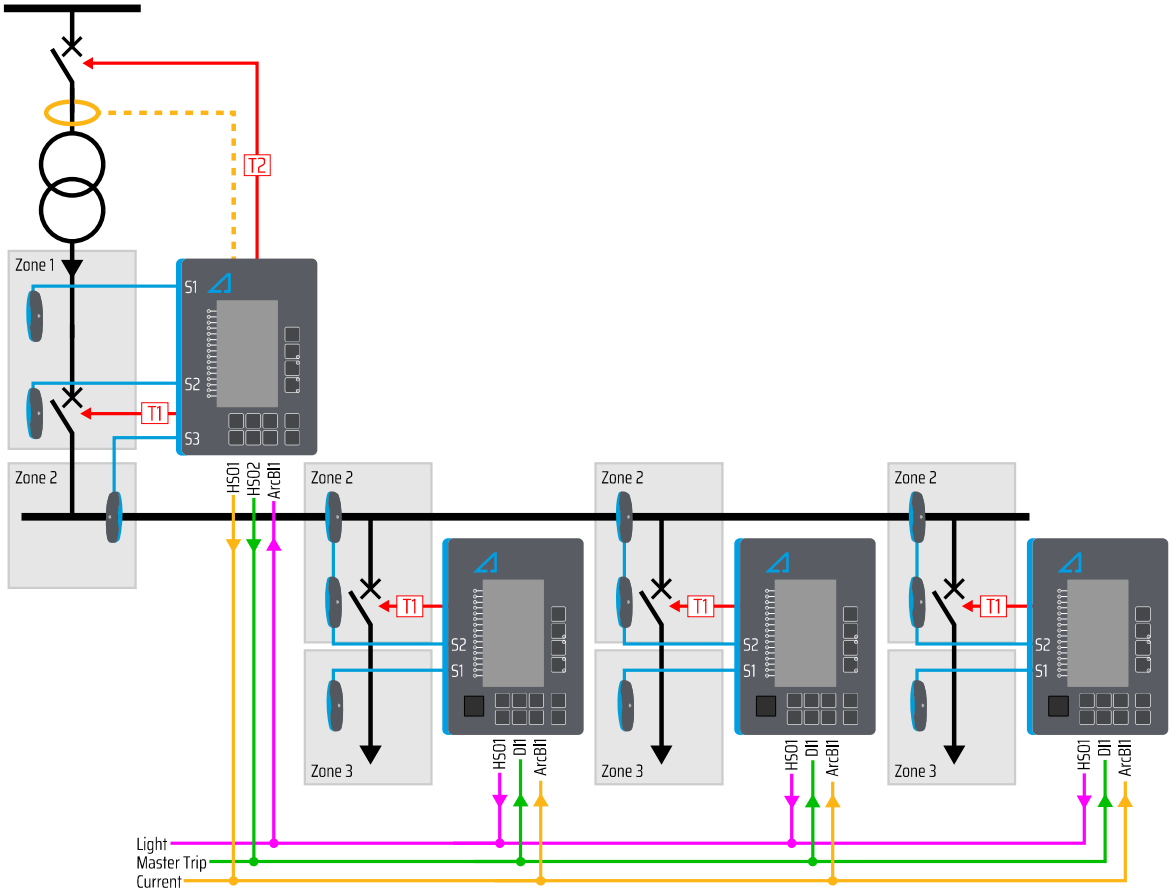

The settings for the device supervising the incoming feeder are the same as in the first example. The devices supervising the busbar and the outgoing feeder, however, use different settings:

- Channel 1: Installed to outgoing feeder cable compartment. Enabled in Zone 3.
- Channel 2: Installed to outgoing feeder circuit breaker compartment and the busbar. Enabled in Zone 2.

If either phase overcurrent or residual overcurrent is needed for the tripping decision, they can be enabled in the same way as light sensors in the zone. When a current channel is enabled, the measured current needs to be above the set current limit in addition to light sensing for the zone to trip.

Measured input

Arc protection uses samples based on current measurements. If the required number of samples is found to be above the setting limit, the current condition activates. The arc protection can use either phase currents, residual currents or both.

Table. 4.5.43 - 454. Measurement inputs of the U1/U2>/< function.

Signal	Description
I_{L1} samples	Samples received by I_{L1} current measurement channel
I_{L2} samples	Samples received by I_{L2} current measurement channel
I_{L3} samples	Samples received by I_{L3} current measurement channel
I_{01} samples	Samples received by I_{01} current measurement channel
I_{02} samples	Samples received by I_{02} current measurement channel

General settings

The following general settings define the general behavior of the function. These settings are static i.e. it is not possible to change them by editing the setting group.

Table. 4.5.43 - 455. General settings of the function.

Name	Range	Default	Description
I/I0 Arc> LN mode	• On • Blocked • Test • Test/Blocked • Off	On	Set mode of ARC block. This parameter is visible only when *Allow setting of individual LN mode* is enabled in *General* menu.
I/I0 Arc> force status to	• Normal • PH curr blocked • PH curr Start • ResCurr Blocked • ResCurr Start • Zone 1 Trip • Zone1 Blocked • Zone2 Trip • Zone2 Blocked • Zone3 Trip • Zone3 Blocked • Zone4 Trip • Zone4 Blocked	Normal	Force the status of the function. Visible only when *Enable stage forcing* parameter is enabled in *General* menu.

© Arcteq Relays Ltd
IM00099

Name	Range	Default	Description
Channel 1 sensors Channel 2 sensors Channel 3 sensors Channel 4 sensors	• No sensors • 1 sensor • 2 sensors • 3 sensors	No sensors	Defines the number of sensors connected to the channel (channels 1/2/3/4). Used for supervising the health of the connection.
Channel 1 sensor status Channel 2 sensor status Channel 3 sensor status Channel 4 sensor status	• Sensors OK • Configuration fault state	-	Displays the status of the sensor channel. If the number of sensors connected to the channel does not match with the set "Channel 1/2/3/4 sensors" setting, this parameter will go to the "Configuration fault" state.

Pick-up settings

The pick-up of each zone of the Iarc>/I0arc> function is controlled by one of the following: the phase current pick-up setting, the residual current pick-up setting, or the sensor channels. The pick-up setting depends on which of these are activated in the zone.

Setting group selection controls the operating characteristics of the function, i.e. the user or user-defined logic can change function parameters while the function is running.

Table. 4.5.43 - 456. Enabled Zone pick-up settings.

Name	Range	Step	Default	Description
Phase current pick-up	0.05...40.00 x I_n	0.01 x I_n	1.2 x I_n	The phase current measurement's pick-up value (in p.u.).
I0 input selection	• None • I01 • I02	-	None	Selects the residual current channel (I01 or I02).

Name	Range	Step	Default	Description
Res.current pick-up	0.05...40.00 x I_{0n}	0.01 x I_{0n}	1.2 x I_{0n}	The residual current measurement's pick-up value (in p.u.).
ZoneX Enabled	• Disabled • Enabled	-	Disabled	Enables the chosen zone. Up to 4 zones can be enabled.
ZoneX Ph. curr. Enabled	• Disabled • Enabled	-	Disabled	The phase overcurrent allows the zone to trip when light is detected.
ZoneX Res. curr. Enabled	• Disabled • Enabled	-	Disabled	The residual overcurrent allows the zone to trip when light is detected.
ZoneX Light 1 Enabled	• Disabled • Enabled	-	Disabled	Light detected in sensor channel 1 trips the zone.
ZoneX Light 2 Enabled	• Disabled • Enabled	-	Disabled	Light detected in sensor channel 2 trips the zone.
ZoneX Light 3 Enabled	• Disabled • Enabled	-	Disabled	Light detected in sensor channel 3 trips the zone.
ZoneX Light 4 Enabled	• Disabled • Enabled	-	Disabled	Light detected in sensor channel 4 trips the zone.
ZoneX DI Enabled	• Disabled • Light In • Current In	-	Disabled	Arc protection option card digital input function selection. "Light In" mode trips the zone when digital input is active. In "Current In" mode digital input must be active at the same time as any of the sensor channels for the zone to trip.

Read-only parameters

The function's *Info* page displays useful, real-time information on the state of the protection function. It is accessed either through the device's HMI display, or through the setting tool software when it is connected to the device and its Live Edit mode is active.

Table. 4.5.43 - 457. Information displayed by the function.

Name	Range	Description
I/I0 Arc> LN behaviour	• On • Blocked • Test • Test/Blocked • Off	Displays the mode of ARC block. This parameter is visible only when *Allow setting of individual LN mode* is enabled in *General* menu.

© Arcteq Relays Ltd

I/I0 Arc> condition	• Z1 Trip • Z1 Blocked • Z2 Trip • Z2 Blocked • Z3 Trip • Z3 Blocked • Z4 Trip • Z4 Blocked	Displays status of the protection function.
Sensor status	• Ph Curr Blocked • Ph Curr Start • Res Curr Blocked • Res Curr Start • Channel1 Light • Channel1 Pressure • Channel2 Light • Channel2 Pressure • Channel3 Light • Channel3 Pressure • Channel4 Light • Channel4 Pressure • Digital input • I/I0 Arc> Sensor 1 Fault • I/I0 Arc> Sensor 2 Fault • I/I0 Arc> Sensor 3 Fault • I/I0 Arc> Sensor 4 Fault • I/I0 Arc> I/O-unit Fault	Displays the general status of sensors.

Function blocking

The block signal is checked in the beginning of each program cycle. The blocking signal is received from the blocking matrix in the function's dedicated input. If the blocking signal is not activated when the pick-up element activates, a TRIP signal is generated.

If the blocking signal is active when the pick-up element activates, a BLOCKED signal is generated and the function does not process the situation further.

The variables the user can set are binary signals from the system. The blocking signal needs to reach the device minimum of 5 ms before the set operating delay has passed in order for the blocking to activate in time.

Events and registers

The arc fault protection function (abbreviated "ARC" in event block names) generates events and registers from the status changes in the events listed below. The user can select which event messages are stored in the main event buffer: ON, OFF, or both. The events triggered by the function are recorded with a time stamp.

The function's outputs can be used for direct I/O controlling and user logic programming. The function also provides a resettable cumulative counter for the events.

Table. 4.5.43 - 458. Event messages.

Event block name	Event names
ARC1	Zone 1...4 Trip ON/OFF
ARC1	Zone 1...4 Block ON/OFF
ARC1	Phase current Blocked ON/OFF
ARC1	Phase current Start ON/OFF
ARC1	Residual current Blocked ON/OFF
ARC1	Residual current Start ON/OFF
ARC1	Channel 1...4 Light ON/OFF
ARC1	DI Signal ON/OFF
ARC1	I/I0 Arc> Sensor 1...4 Fault ON/OFF
ARC1	I/I0 Arc> sub-unit count error ON/OFF

The function registers its operation into the last twelve (12) time-stamped registers. The table below presents the structure of the function's register content.

Table. 4.5.43 - 459. Register content.

Register	Description
Date and time	dd.mm.yyyy hh:mm:ss.mss
Event	Event name
Phase A current	Trip current
Phase B current	
Phase C current	
Residual current	
Active sensors	1...4
Setting group in use	Setting group 1...8 active

4.6 Control functions

4.6.1 Common signals

Common signals function has all protection function start and trip signals internally connected to Common START and TRIP output signals. When any of the activated protection functions generate a START or a TRIP signal, Common signals function will also generate the same signal.

© Arcteq Relays Ltd
IM00099

General settings

The following general settings define the general behavior of the function. These settings are static i.e. it is not possible to change them by editing the setting group.

Table. 4.6.1 - 460. General settings of the function.

Name	Range	Default	Description
Common force status to	• Normal • Start • Trip	Normal	Force the status of the function. Visible only when *Enable stage forcing* parameter is enabled in *General* menu.

Common signals function has all START and TRIP signals of protection functions internally connected to Common START and TRIP output signals. But it is also possible to assign extra signals to activate Common START and TRIP.

Table. 4.6.1 - 461. Common signals extra inputs.

Name	Description
Common Start In	Assign extra signals to activate common START signal. Please note that all protection function START signals are already assigned internally to Common START.
Common Trip In	Assign extra signals to activate common TRIP signal. Please note that all protection function TRIP signals are already assigned internally to Common TRIP.

Read-only parameters

The function's *Info* page displays useful, real-time information on the state of the protection function. It is accessed either through the device's HMI display, or through the setting tool software when it is connected to the device and its Live Edit mode is active.

Table. 4.6.1 - 462. Information displayed by the function.

Name	Range	Description
Common signals condition	• Normal • Start • Trip	Displays status of the function.

Function blocking

Common signals function itself doesn't have blocking input signals. Blocking of tripping should be done in each protection function settings.

Events

The common signals function (abbreviated "GNSIG" in event block names) generates events from the status changes in the events listed below. The user can select which event messages are stored in the main event buffer: ON, OFF, or both.

The function's outputs can be used for direct I/O controlling and user logic programming. The function also provides a resettable cumulative counter for the START and TRIP events.

The events triggered by the function are recorded with a time stamp.

Table. 4.6.1 - 463. Event messages.

Event block name	Event names
GNSIG	Common Start ON/OFF
GNSIG	Common Trip ON/OFF

4.6.2 Automatic voltage regulator (90)

The automatic voltage regulator (abbreviated AVR in this document) is used for controlling secondary side voltage of the transformers that have an on-load tap changer (OLTC). A voltage regulator raises or lowers the secondary voltage based on the bus voltage measurements. Actual controlling takes place in the tap changer: increasing (or decreasing) the secondary winding causes an increase (or a decrease) in the transformer output voltage.

The transformer secondary voltage and bus voltage may vary based on changes and variations in the load, the load power factor, the transmission system, and the resistance and reactance of the load. The aim of using an automatic voltage regulator is to maintain a stable secondary voltage and thus make sure that the distribution voltage does not rise dangerously high or fall unusably low.

Utilities have to follow the regional, national and international regulations that specify the acceptable voltage range. For example, in Finland regulations (SFS-EN 50160) require that the distribution voltage is 230 V (phase-to-earth). Voltage quality measurement is done on a 10-minute average: 95 % of the measured voltages must be ±10 % of the nominal voltage and all measured voltages must be +10…-15 % of the nominal voltage. This measurement is usually taken from 20/0.4 kV distribution transformers on MV overhead lines (rural areas) and cable networks (urban areas) so the 20kV medium voltage is the side where the voltage has to be controlled for all distribution transformers behind the feeding transformer by controlling the load tap changer. This control model is commonly called bus regulation.

Other uses for voltage control are, for example, reactive power control and optimization of the transmission lines.

Features and configuration

The automatic voltage regulator features separate operating windows for voltage raise and lower commands. Both raise and lower commands have two operating stages with different operation voltage levels and operation times. First stage of both voltage raise and lower commands have common definite time delay for operation. Second stage voltage raise and lower commands have a common definite and inverse operating time, whereas undervoltage the in-built overcurrent function blocks all commands to raise or lower the voltage. The target voltage as well as the operating settings for the voltage windows can be changed by editing the setting groups. The tap changer's location is monitored with mA, RTD, or digital input channel voltage measurement. The position of the tap changer can be controlled automatically and manually. The AVR monitors the phase-to-phase voltage of the bus. External commands can block the operation of the AVR either by completely blocking the control algorithm, or by only blocking the control outputs.

The blocking signal and the setting group selection control the operating characteristics of the function, i.e. the user or user-defined logic can change function parameters while the function is running. The function has a total of eight (8) setting groups available.

The following examples present how to configure the automatic voltage regulator.

General settings

© Arcteq Relays Ltd
IM00099

General settings include the selection of the measurement reference voltage. Additionally, the measured phase-to-phase voltage and the measurement input (if U4 is used for voltage measurements) must be selected as well.

The image below two connection options for voltage measurement.

Figure. 4.6.2 - 207. Two connection options for voltage measurement.

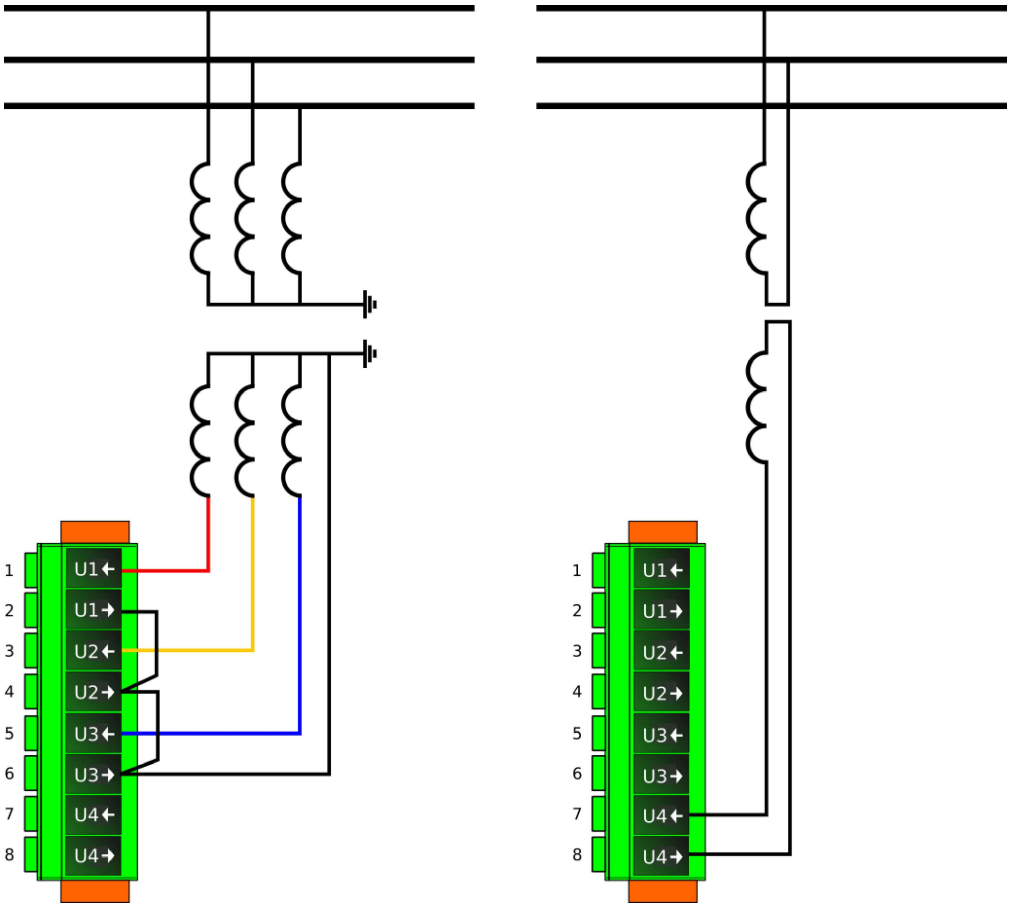

The connection on the left shows the voltage transformer module that has a full voltage connection with complete phase-to-phase or phase-to-earth voltages (3LN+U4; also on modes 3LL + U4 and 2LL+U3+U4); the AVR measurement voltage can be selected to be either U12, U23, or U31. If only one voltage is available for the AVR (the connection on the right), the regulator must be connected to the U4 input, and set to measure both from the U4 channel and from the connected voltage (U12, U23 or U31).

Control settings

The control settings include the operating mode selection ("Auto" or "Manual") as well as the settings for the maximum and minimum control pulse lengths for the used output contacts. Additionally, the settings include the setting for the minimum instant operation wait time between pulses.

Below is an example of the settings that control pulse timings.

Figure. 4.6.2 - 208. Control pulse timing settings.

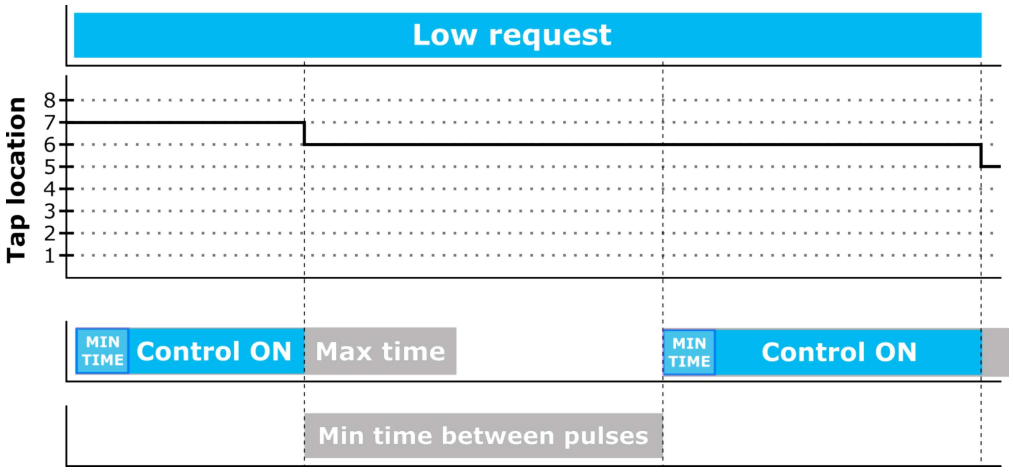

First, the user sets the minimum and maximum times for control pulses. If the tap changes location during the control pulse, and therefore also changing the voltage and the controlled direction, the command is terminated. If the set maximum control time is exceeded, the control signal is terminated even if tap location has not changed. After the termination, the set minimum time between pulses is used to prevent new control pulse outputs (esp. instant low requests) from taking place during this time.

Tap settings

The properties of the used tap changer are set in the tap settings. They allow users to configure the number of tap changer positions, the middle position, and the position indication message. There are several different ways to connect tap position indication:

- mA input cards installed to the device
- External mA input units (ADAM-4016) connected to devices RS-485 serial port
- Binary coded inputs (with digital inputs)
- BCD coded inputs (with digital inputs)
- Measuring resistance with RTD channel
- Measuring voltage with a digital input

mA input

For example, let us say a transformer has a tap changer with 19 positions, with position 9 presenting the middle position. The tap changer location is indicated by the mA signal (4…20 mA). Each tap position has a 1.67 % effect on the transformer's output voltage. The highest mA value is expected when the tap is in the highest position.

According to these data, the tap changer properties are set to the AVR as follows:

Setting	Value
Tap position indication	mA input
Tap total positions (absolute value 1-n)	19 n
Tap center (on absolute scale)	10
Tap step effect	1.67 %
mA input low range	4 mA
mA input high range	20 mA

© Arcteq Relays Ltd
IM00099

Setting	Value
Tap position indication	Max.mA.max.Pos

Based on these given values, the AVR function calculates the following:

Calculation	Value
Tap step voltage effect	334 V_{pri}
Tap maximum decrease	-15.03 %
Tap maximum increase	15.03 %
Tap control band	30.06 %
Tap step in mA	0.889 mA
mA input now	measured mA input value

These basic settings define the control area where the AVR must operate.

Either Channel 1 or 2 can be used to connect a mA input to an option card (see the image below).

Figure. 4.6.2 - 209. Connecting mA input to option card.

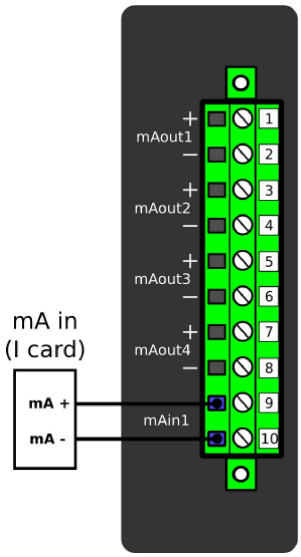

Figure. 4.6.2 - 210. Tap position indication (according to the example settings).

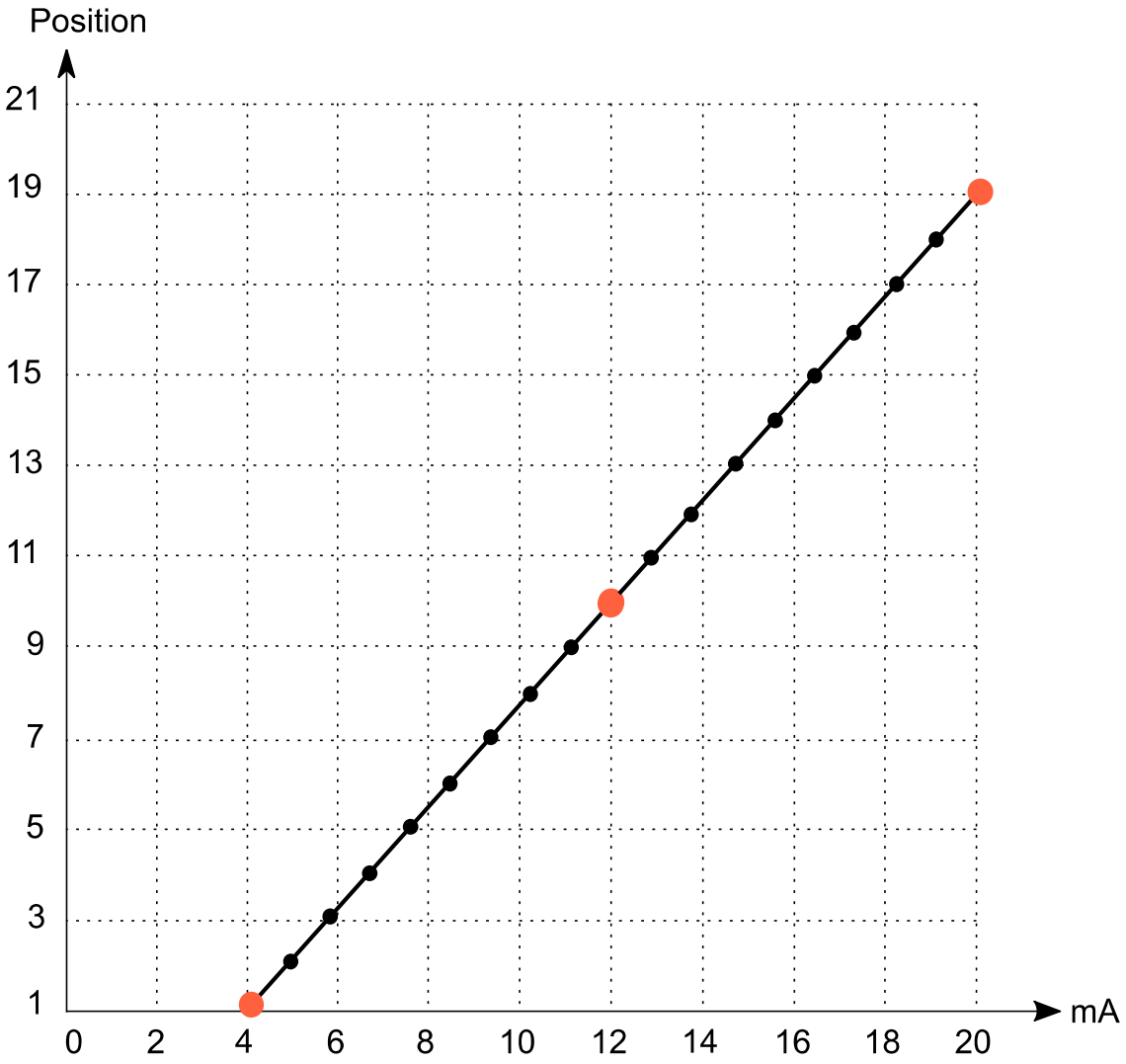

Some tap changers might work “inversely”, meaning that the maximum mA measurement indicates that the tap changer is in the lowest position. If this is the case, this can be switched with the “Tap position indication” parameter, as shown in the image below.

© Arcteq Relays Ltd

Figure. 4.6.2 - 211. Switching the tap position indication.

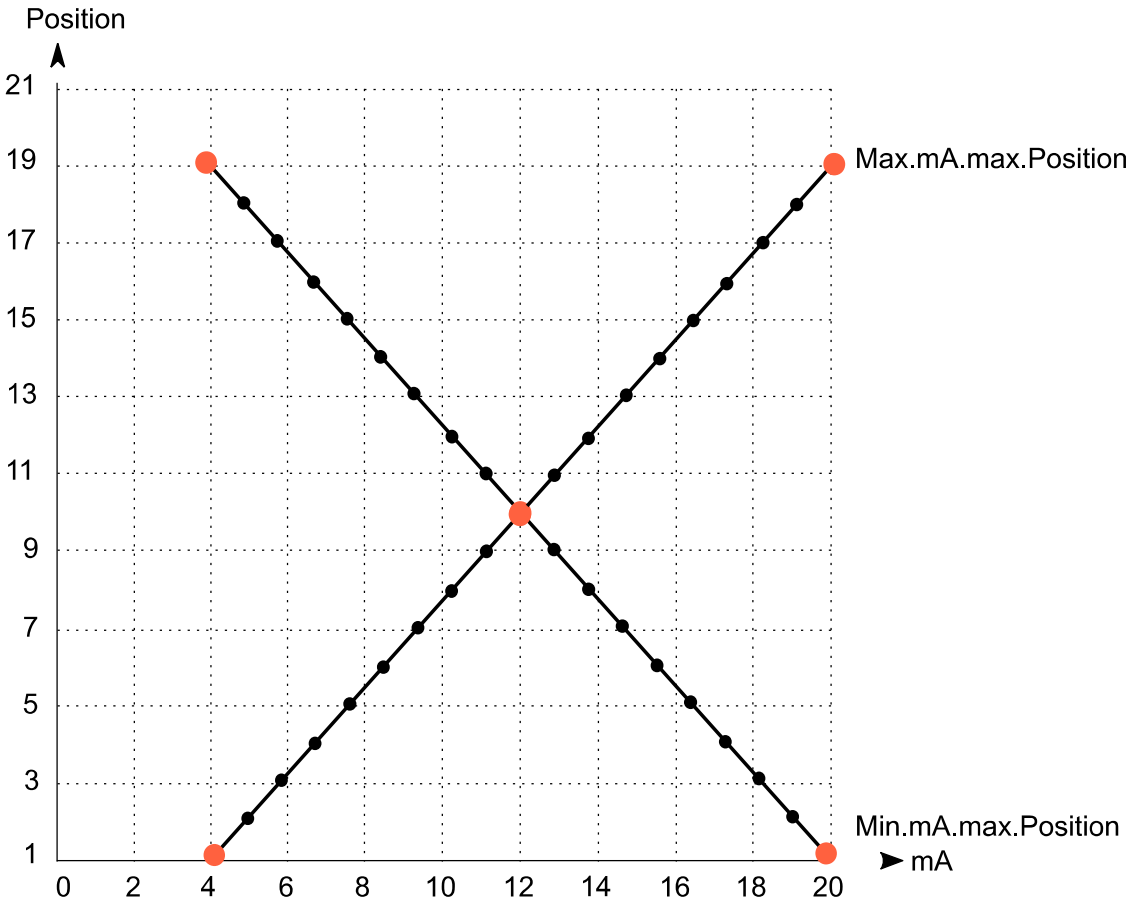

Correcting non-linear mA tap position indication with current scaling

When setting up the tap changer settings, it would be ideal to have the mA difference between each step be identical. However, this is not how it goes most of the time, and sometimes this non-linear increase can cause the AVR function to assume that the tap position has changed two or zero steps when in actuality the tap changer has been controlled for one step. This problem can be corrected by using the "Scaled input" mode, and then scaling the output value of the tap position that comes from the mA inputs at *Measurement → AI (mA, DI volt) scaling*. Below is an example where the tap changer has 19 positions (18 steps) and the mA/position curve has been corrected at two points between the minimum and maximum positions.

Figure. 4.6.2 - 212. Example of scaled input setting.

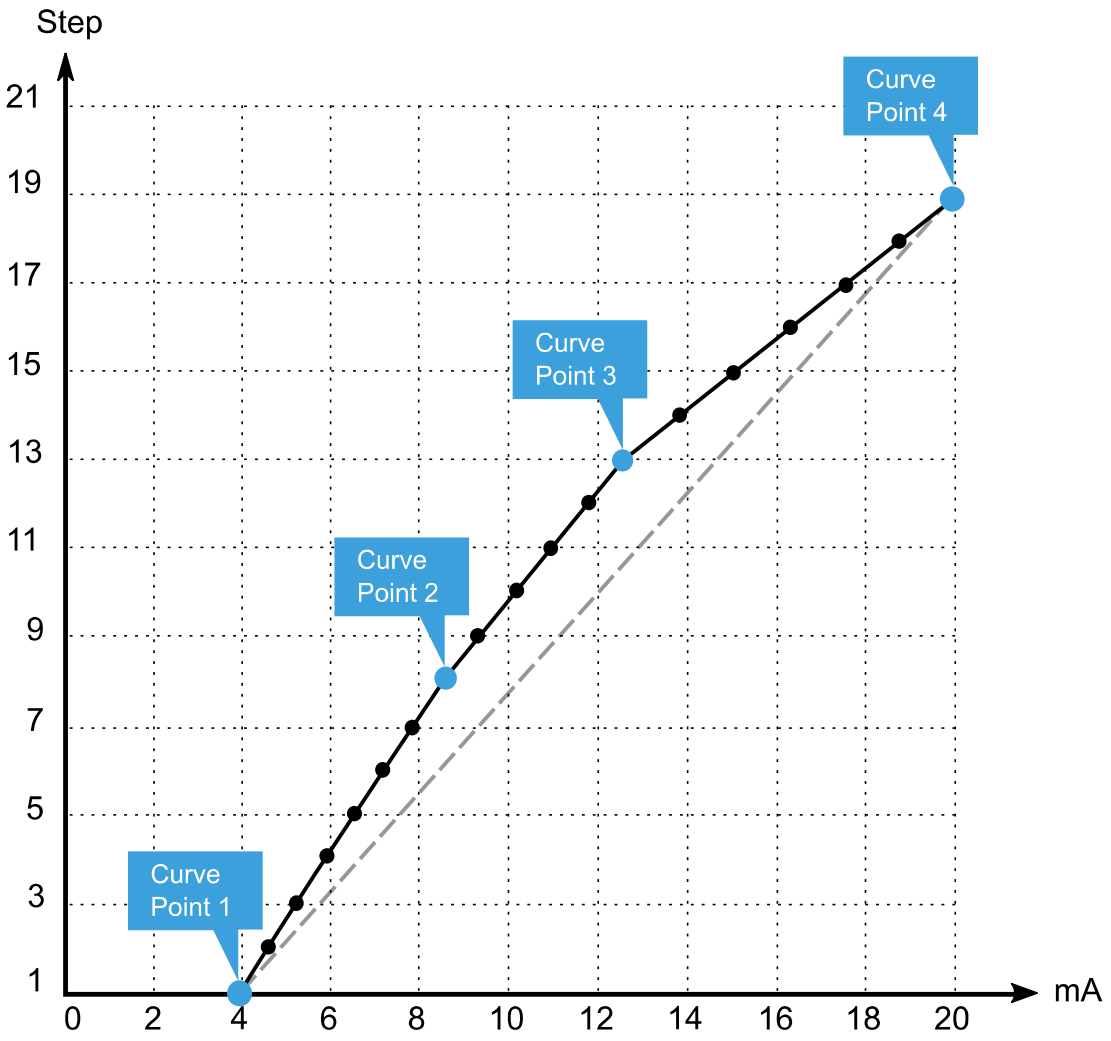

Parameter	Setting
Scaled value handling	Integer (nearest)
Input value 1	4
Scaled output value 1	1
Input value 2	8.5
Scaled output value 2	8
Add curve point 3	Used
Input value 3	12.5
Scaled output value 3	13
Add curve point 4	Used
Input value 4	20

© Arcteq Relays Ltd

Parameter	Setting
Scaled output value 4	19

External mA input

There is an alternative to using an RTD & mA card: one can also use an external mA unit (ADAM-4016) which connects to the RS-485 port.

Binary coded inputs

Sometimes tap position indication is done by using multiple digital inputs. With binary coded inputs any one decimal numeral can be represented by a six-bit pattern. You can use binary input code by setting the "Tap position indication" to "Binary coded inputs" at the Tap settings. The digital inputs are then defined in the regulator's menu at *Control → Control functions → Voltage regulator → IO → Input signal control*. Up to six digital inputs can be set for binary input coding, and up to 63 positions can be indicated with binary coding (see the image below).

Binary coded input	Bits 6	5	4	3	2	1	Decimal digit
	0	0	0	0	0	0	0
	0	0	0	0	0	1	1
	0	0	0	0	1	0	2
	0	0	0	0	1	1	3
	0	0	0	1	0	0	4
	0	0	0	1	0	1	5
	0	0	0	1	1	0	6
	0	0	0	1	1	1	7
	0	0	1	0	0	0	8
	0	0	1	0	0	1	9
	0	0	1	0	1	0	10
	0	0	1	0	1	1	11
	0	0	1	1	0	0	12
	0	0	1	1	0	1	13
	0	0	1	1	1	0	14
	0	0	1	1	1	1	15
	0	1	0	0	0	0	16
	0	1	0	0	0	1	17
	0	1	0	0	1	0	18
	0	1	0	0	1	1	19
	0	1	0	1	0	0	20
	0	1	0	1	0	1	21
	0	1	0	1	1	0	22
	0	1	0	1	1	1	23
	0	1	1	0	0	0	24
	0	1	1	0	0	1	25
	0	1	1	0	1	0	26
	0	1	1	0	1	1	27
	0	1	1	1	0	0	28
	0	1	1	1	0	1	29
	0	1	1	1	1	0	30
	0	1	1	1	1	1	31

Bits 6	5	4	3	2	1	Decimal digit
1	0	0	0	0	0	32
1	0	0	0	0	1	33
1	0	0	0	1	0	34
1	0	0	0	1	1	35
1	0	0	1	0	0	36
1	0	0	1	0	1	37
1	0	0	1	1	0	38
1	0	0	1	1	1	39
1	0	1	0	0	0	40
1	0	1	0	0	1	41
1	0	1	0	1	0	42
1	0	1	0	1	1	43
1	0	1	1	0	0	44
1	0	1	1	0	1	45
1	0	1	1	1	0	46
1	0	1	1	1	1	47
1	1	0	0	0	0	48
1	1	0	0	0	1	49
1	1	0	0	1	0	50
1	1	0	0	1	1	51
1	1	0	1	0	0	52
1	1	0	1	0	1	53
1	1	0	1	1	0	54
1	1	0	1	1	1	55
1	1	1	0	0	0	56
1	1	1	0	0	1	57
1	1	1	0	1	0	58
1	1	1	0	1	1	59
1	1	1	1	0	0	60
1	1	1	1	0	1	61
1	1	1	1	1	0	62
1	1	1	1	1	1	63

BCD-coded digital inputs

Just like binary coded input position indication, "Binary coded decimal" (BCD) position indication also uses multiple digital inputs. But they are not interchangeable. Difference between the two is the numbering format. Whereas binary coded mode 4-bit hexadecimal number is valid up to F_{16} representing binary 1111_2 (decimal 15), BCD numbers stop at decimal 9 (1001_2 in binary). Because of this decimal 10 is 1 0000_2 in binary. You can use BCD inputs by setting the "Tap position indication" to "BCD-coded inputs" at the Tap settings. The digital inputs are then defined in the regulator's menu at *Control → Control functions → Voltage regulator →IO → Input signal control*. Up to five digital inputs can be set for BCD coding, and up to 39 positions can be indicated with BCD coding (see the image below).

BCD coded input	Bits 6	5	4	3	2	1	Decimal digit
	0	0	0	0	0	0	0
	0	0	0	0	0	1	1
	0	0	0	0	1	0	2
	0	0	0	0	1	1	3
	0	0	0	1	0	0	4
	0	0	0	1	0	1	5
	0	0	0	1	1	0	6
	0	0	0	1	1	1	7
	0	0	1	0	0	0	8
	0	0	1	0	0	1	9
	0	0	1	0	1	0	10
	0	0	1	0	1	1	11
	0	0	1	1	0	0	12
	0	0	1	1	0	1	13
	0	0	1	1	1	0	14
	0	0	1	1	1	1	15
	0	1	0	0	0	0	16
	0	1	0	0	0	1	17
	0	1	0	0	1	0	18
	0	1	0	0	1	1	19

Bits 6	5	4	3	2	1	Decimal digit
0	1	0	1	0	0	20
0	1	0	1	0	1	21
0	1	0	1	1	0	22
0	1	0	1	1	1	23
0	1	1	0	0	0	24
0	1	1	0	0	1	25
0	1	1	0	1	0	26
0	1	1	0	1	1	27
0	1	1	1	0	0	28
0	1	1	1	0	1	29
0	1	1	1	1	0	30
0	1	1	1	1	1	31
1	0	0	0	0	0	32
1	0	0	0	0	1	33
1	0	0	0	1	0	34
1	0	0	0	1	1	35
1	0	0	1	0	0	36
1	0	0	1	0	1	37
1	0	0	1	1	0	38
1	0	0	1	1	1	39

Tap position measured from resistance

Instead of mA measurement, RTD resistance is also an applicable option. To use RTD measurement the position indication needs to be scaled in *Measurement → AI (mA, DI volt) scaling* (see the image below).

Parameter	Setting
Scaled value handling	Integer (nearest)
Input value 1	4
Scaled output value 1	1
Input value 2	8.5
Scaled output value 2	8
Add curve point 3	Used
Input value 3	12.5
Scaled output value 3	13
Add curve point 4	Used

© Arcteq Relays Ltd
IM00099

Parameter	Setting
Input value 4	20
Scaled output value 4	19

In the example figure above, the RTD card's Sensor 1 is used for tap position indication. With these settings the measured resistance (0...180 Ω) is transferred to the tap position 1...19. To use this scaling settting, please select the option "Scaled input" for the "Tap position status" parameter.

Tap position measured from digital input voltage

If none of the above possibilities (RTD, mA, binary coding or BCD coding) are available, it is also possible to use a digital input channel to measure the voltage over the tap changer through a resistor and then use this to indicate the tap changer position. The setup procedure is nearly identical to the RTD measurement option setup (as described above), except the desired digital input voltage is selected as the tap position source.

Voltage regulation settings ("Active settings")

The settings presented in this subsection can be changed online by changing the setting group.

The target voltage and the control window where the voltage should be kept need to be set for the regulator in percentage of the nominal value. When setting up the parameters for the voltage window one should consider the regulating sensitivity and the minimizing of control operations. An unnecessarily tight voltage window may cause excessive control operations which in turn cause the network voltage to fluctuate. The target should be a calm network that only causes necessary control operations. A correctly set voltage window is kept to the physical tap changer and keeps the network voltage stable during normal network events.

There are a few basic rules that apply to the setting of the parameters for the first voltage window. First, the window should never be set below the value of the tap step effect setting, and the window should never exceed the allowed variation loads.

Therefore, the minimum voltage window size can be calculated as follows:

$$U >/<_{window} = 1.2 \times tap\ step\ effect\ \%$$

This gives 20 % more total band for regulating, and this setting ensures that the voltage remains within the voltage window after a tap change operation. You can increase the regulating sensitivity by setting a smaller window; however, this is not advised.

Next, the window must be set into the voltage regulator: divide the calculated $U>/<_{window}$ by two, and then set the result as the value for the parameters *U> setting (+U_{TGT})* and *U< setting (-U_{TGT})*. If the values for both window settings are equal, the regulator has same sensitivity for both overvoltage and undervoltage situations. The voltage windows as well as all other setting parameters are in relation to the set target voltage U_{TGT}. If the target voltage is changed, the voltage window setting parameters change as well to follow the new target voltage.

The following three images present various situations with the setting of the voltage window.

Figure. 4.6.2 - 213. Tight voltage window (window not reached).

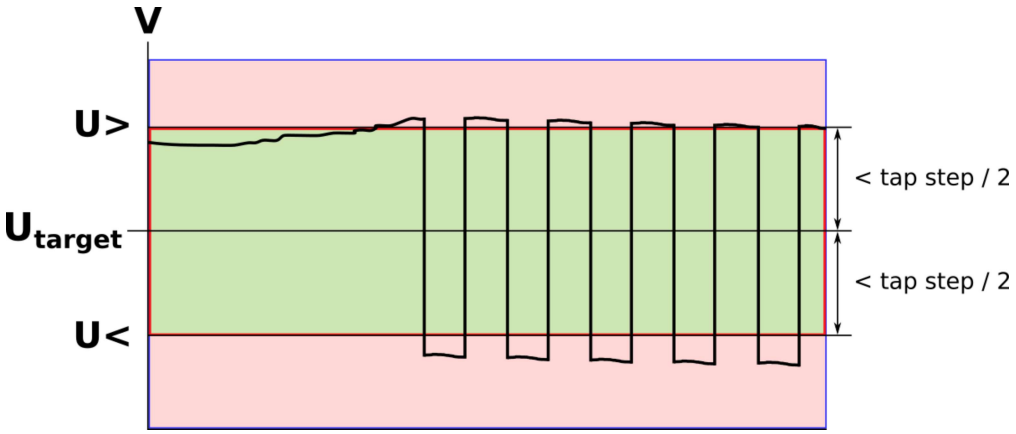

In this example situation the set voltage window is too tight compared to the tap effect. The AVR cannot reach the target window and thus lowers the voltage. Eventually a stable voltage may be found but the next tap change request will cause similar fluctuation and the cycle begins again.

Figure. 4.6.2 - 214. Tight voltage window (window reached but voltage near the limit).

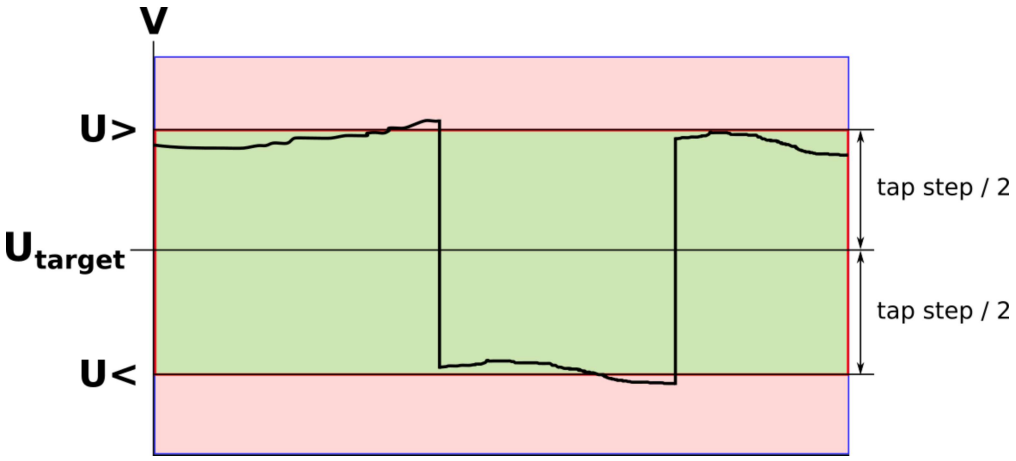

In this example situation the set voltage window is still too tight compared to the tap effect. This time the AVR reaches the target window with one tap change, but afterwards the voltage is very close to the limit. If the voltage goes back to the original value, another tap change is needed. This may cause an excessive number of tap operations, and the quality of the network voltage is not significantly improved.

© Arcteq Relays Ltd

Figure. 4.6.2 - 215. Voltage window according to the recommendation.

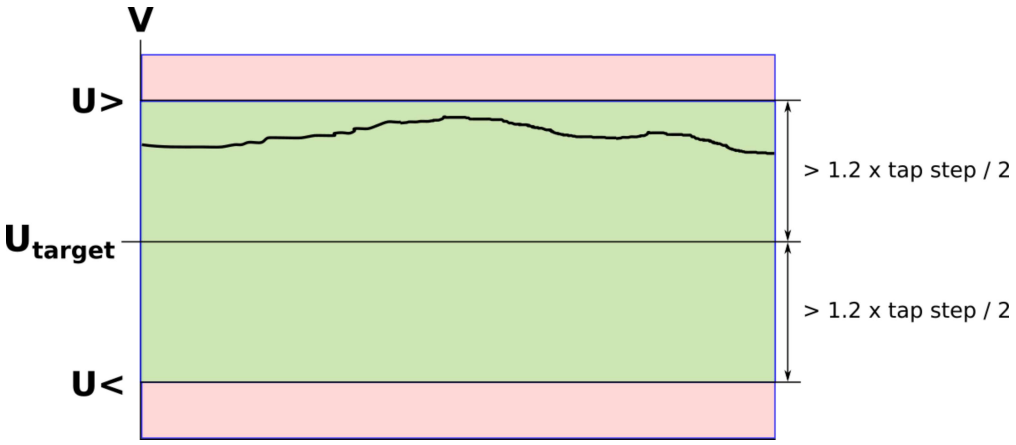

In this example the voltage window limits are set according to the recommendation: the set window is 20 % bigger than the tap step effect. This ensures that after tap changing the voltage it's not too near the opposite voltage window limit. If the user wants more sensitivity, the voltage window can be set lower; however, it is not recommended that the set window is less than 5 % bigger than the tap step effect.

In automatic voltage regulator applications the first window ($U>/<_{window}$) is usually used for slower operation with a definite set operating time and small deviations. Typically this operating time is 30…120 seconds. The function starts counting the operating time when the measured voltage exceeds either of the set window limits. If the voltage remains beyond the limits until the set operating time has passed, a tap change operation is applied. If the measured voltage returns to within the target voltage window, the operating time counter is reset. A 3 % hysteresis is applied for the U> and U< pick-up resets in the voltage window.

When defining the setting limits for the second (fast operation) voltage window, it must be ensured that one tap change cannot bring the voltage within the first voltage window. See the image below, where the first window is 20 % bigger than the tap step effect and the second window is increased by two tap steps from the first window. When the voltage exceeds the higher limit of the second voltage window, one tap change operation is applied and it brings the voltage down. However, the voltage stays within the second window limits. Only when a second tap change is applied does the voltage drop within the limits of the first voltage window.

Figure. 4.6.2 - 216. Second voltage window two tap steps from the first voltage window.

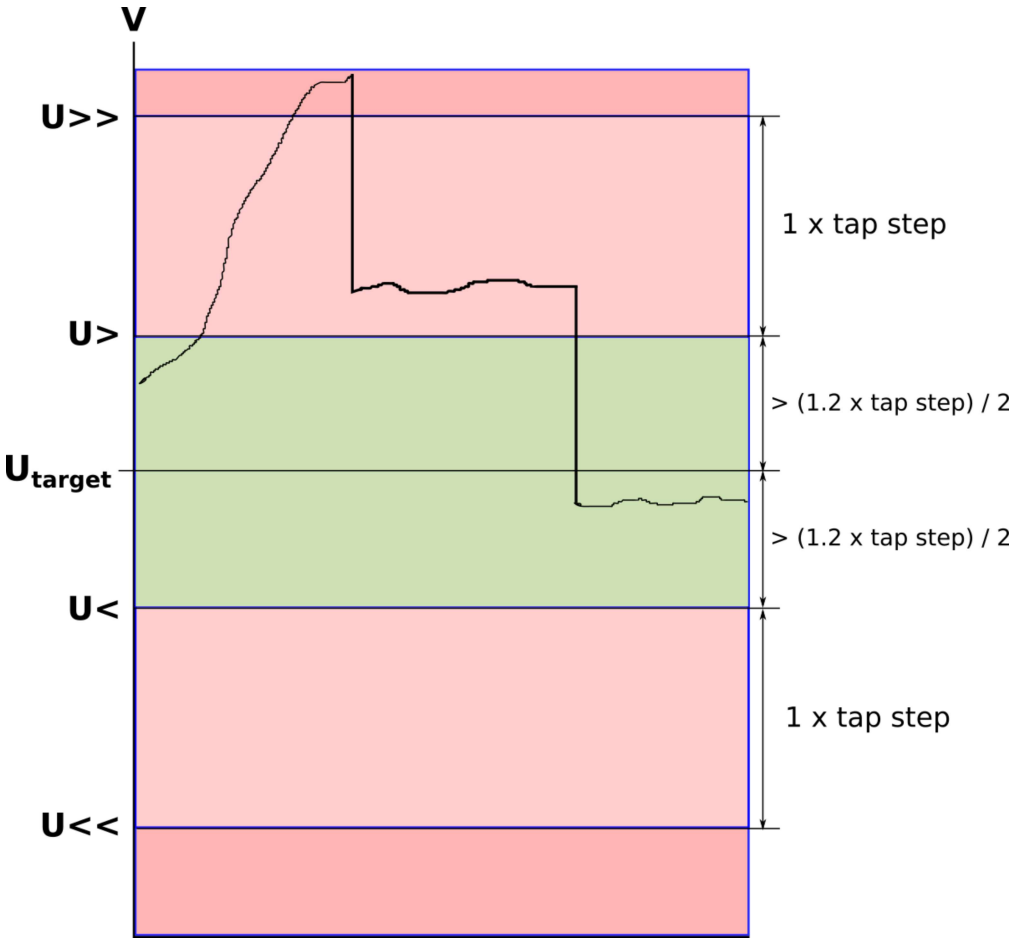

It is recommended that the operating time for the second (fast) window is in inverse mode, although it can also be set to the definite operating mode. Therefore, the more the measured voltage exceeds the threshold, the faster the operating time will be.

The AVR inverse operating time is calculated with the following equation:

$$\text{Operating time} = \frac{U \gg/\ll \; time\; delay * Tap\; effect\%}{|\Delta U\%|}$$

For example, if *U >>/<<< time delay* has been set to 40 seconds and the measured voltage difference from the set target is 4 %, using the formula above the operating time can be determined to be 10 seconds (40s / 4)

© Arcteq Relays Ltd

Figure. 4.6.2 - 217. Inverse operating time characteristics for the second voltage window (U>>/<<$_{window}$).

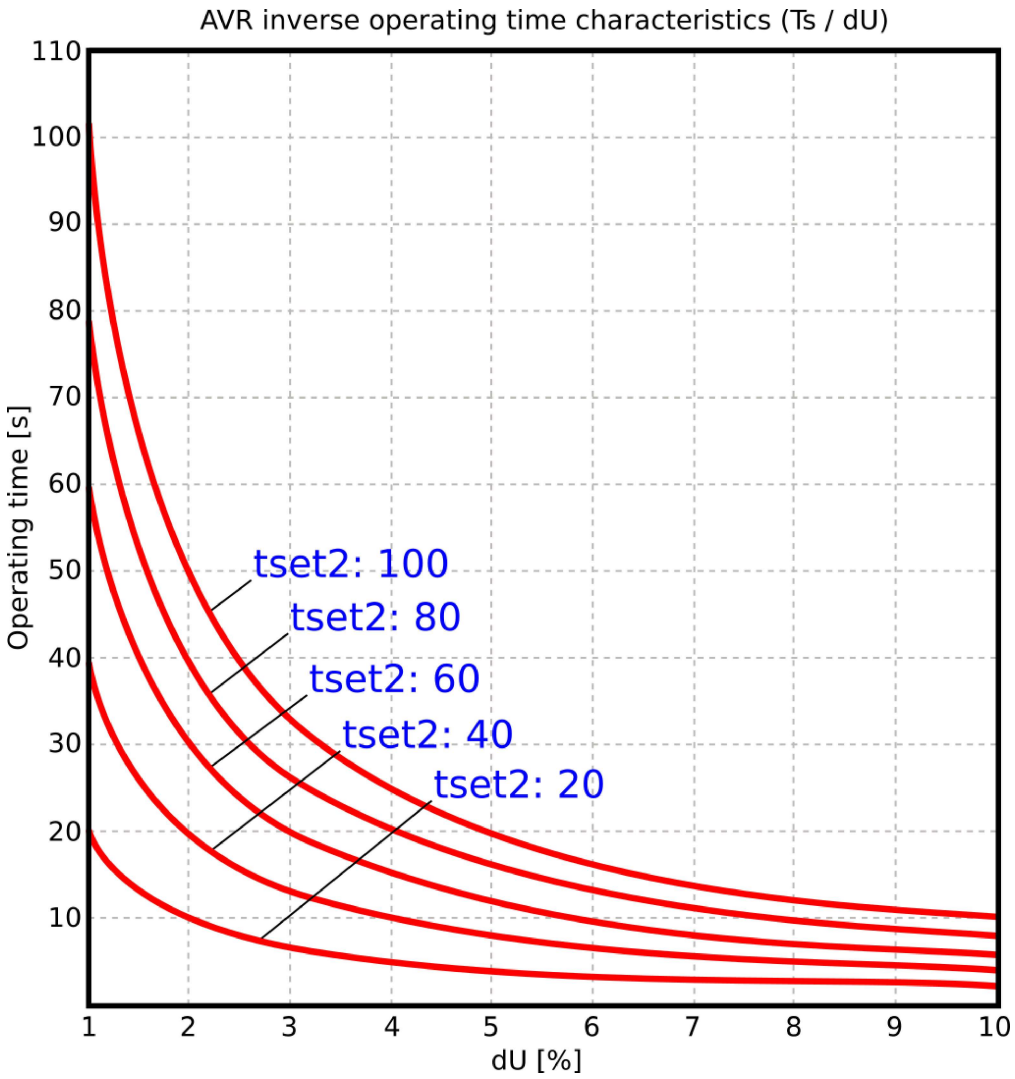

The inverse operating time controls the voltage back to the set target window: the bigger the deviation (dU [%]) is, the smaller the operating time to get the voltage within the target window.

Figure. 4.6.2 - 218. Combined operating time characteristics of both voltage windows.

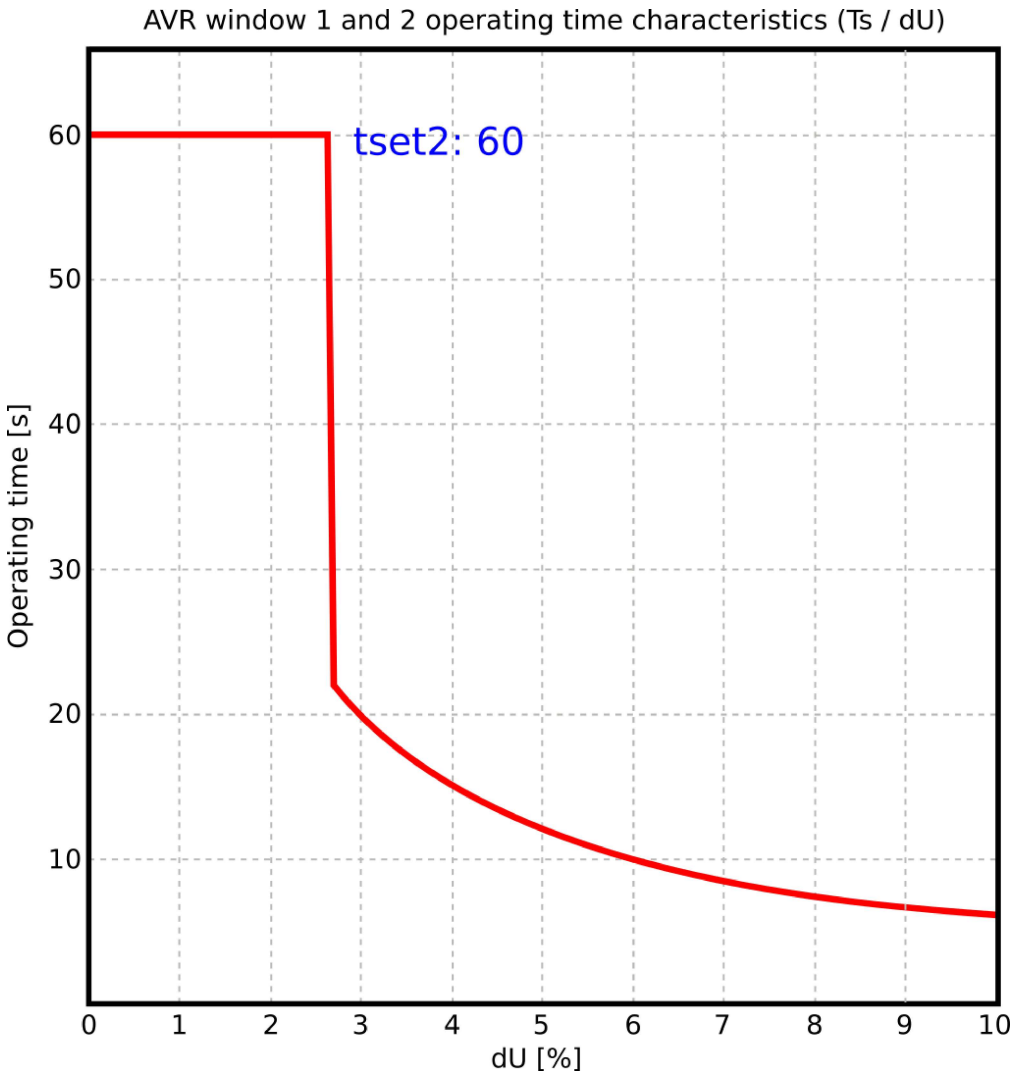

The figure above presents the combined operating time characteristics of both voltage windows as a function of the voltage deviation. As it shows, the faster inverse operation time characteristics are in effect until the voltage deviation hits the U>>/<< window threshold. After hitting the U>/< window threshold the graph follows the definite operating time characteristics.

Settings for this example are:

$$\text{U} >/< \text{pick-up} = \frac{(1.2 \times tap\ step\ effect)}{2} = \frac{(1.2 \times 1.67\ \%)}{2} \approx 1\ \%$$

➔ operating time is 60 seconds

$$\text{U} \gg/\ll \text{pick-up} = U >< pick\text{-}up + tap\ step\ effect = 1\ \% + 1.67\ \% \approx 2.67\ \%$$

➔ operating time is 60 seconds

When a very high overvoltage occurs, the regulator instantly lowers the voltage without any other delays but the given minimum time between control pulses. This lowering function remains in use until the measured voltage is below the set instant low threshold level (U>>> Instant setting). After this level is reached, the time characteristics of the corresponding window calculate the consecutive time delays until the desired target window is reached.

© Arcteq Relays Ltd
IM00099

Figure. 4.6.2 - 219. Instant low command with two time-delayed windows.

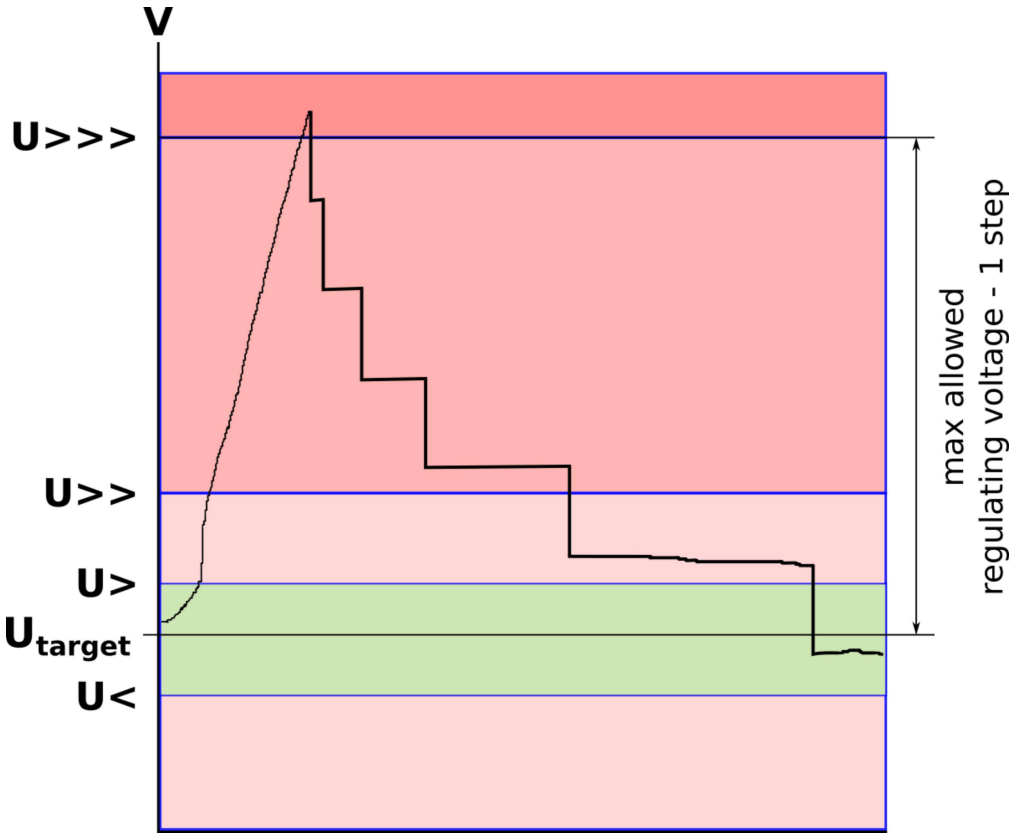

The pick-up setting recommendation for the instant low function is equal to the the maximum allowed overvoltage subtracted by the tap effect. This way there should not be situations where the voltage is allowed to stay above the maximum allowed voltage for a long time. For example, if the maximum allowed overvoltage is 10 % by local standards and the tap effect for the transformer is 1.67 %, the pick-up for the instant low function should be set to 8.33 % (10 % – 1.67 %).

Figure. 4.6.2 - 220. Effect of the Instant low setting on time characteristics.

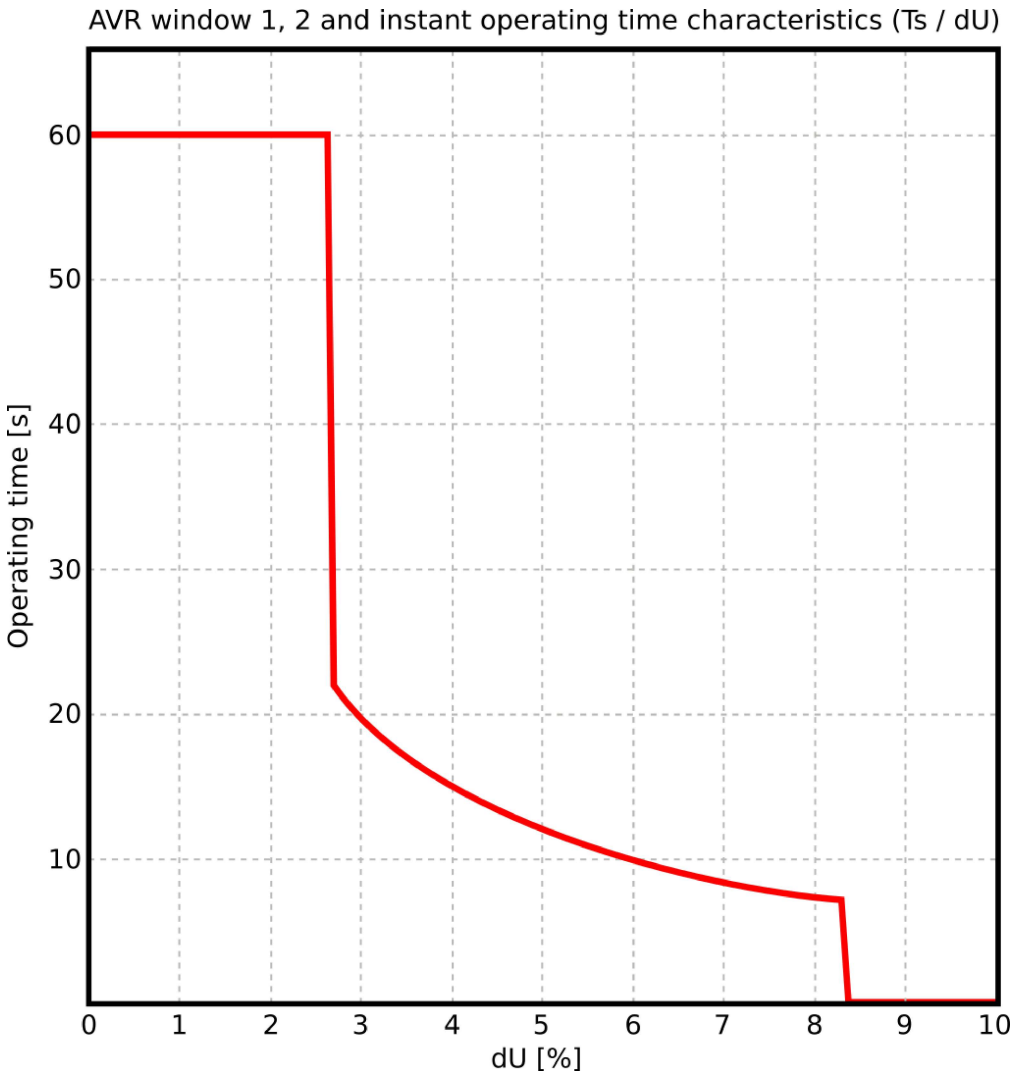

The AVR's low voltage blocking prevents the tap changer's operations to avoid the control to the maximum position when the feeding voltage returns to the nominal level (see the image below). This can occur in various power-off situations, such as when there is a heavy short-circuit fault in the feeding network side, or when the tap drifts towads the maximum voltage.

© Arcteq Relays Ltd

Figure. 4.6.2 - 221. Low voltage blocking.

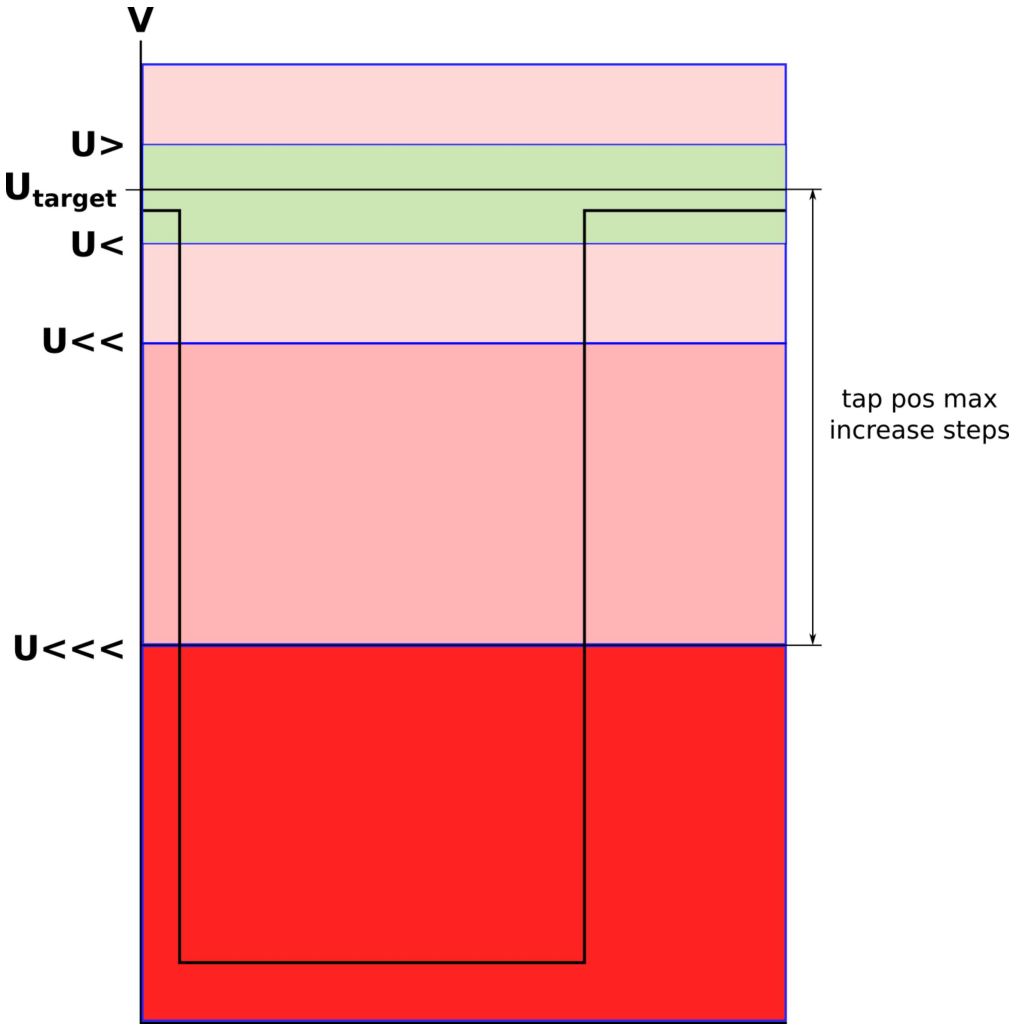

The recommended setting for low voltage blocking is the maximum tap increase positions effect. For example, if the tap changer has a ± 9 × 1.67 % control range, the undervoltage blocking should be set to 15 % (9 × 1.67 %).

The last part of the AVR configuration is to make sure that an overcurrent or a short-circuit fault on the load side does not cause a tap change operation due to the load-side voltage drop. If the regulator's operation is not blocked during the short-circuit fault when the transformer is under heavy overcurrent, the tap changer controls the voltage up to compensate for the voltage drop; this most probably ends up causing damage to the tap changer equipment. However, the blocking can also be achieved by internal overcurrent blocking (if the phase currents are measured with the AVR) or by a pick-up signal from the external overcurrent protection device or transformer protection device (GOOSE or a wired signal to the AVR's digital input).

Measured input

The AVR measures fundamental frequency component of phase-to-phase voltages for supervising the voltage level. Fundamental frequency component of phase currents can be used for overcurrent blocking.

Table. 4.6.2 - 464. Measurement inputs of the automatic voltage regulator function.

Signal	Description
U_1 RMS	Fundamental frequency component of voltage channel U_1/V
U_2 RMS	Fundamental frequency component of voltage channel U_2/V
U_3 RMS	Fundamental frequency component of voltage channel U_3/V
U_4 RMS	Fundamental frequency component of voltage channel U_4/V
I_{L1} RMS	Fundamental frequency component of phase L1 (A) current
I_{L2} RMS	Fundamental frequency component of phase L2 (B) current
I_{L3} RMS	Fundamental frequency component of phase L1 (C) current

General settings

The general settings define the basic control settings for the voltage measurement configuration. The settings give general information about the AV regulator's condition and status. The general settings also include indications and measurements.

Table. 4.6.2 - 465. General setting parameters.

Name	Range	Step	Default	Description
Vreg LN mode	• On • Blocked • Test • Test/Blocked • Off	-	On	Set mode of VRG block. This parameter is visible only when *Allow setting of individual LN mode* is enabled in *General* menu.
Vreg LN behaviour	• On • Blocked • Test • Test/Blocked • Off	-	-	Displays the mode of VRG block. This parameter is visible only when *Allow setting of individual LN mode* is enabled in *General* menu.
Vreg settings condition	• U>> set too low • U< set too high • U> set higher than U>> • U< set lower than U<< • U>>> set too low • U<<< set too high • VT selection not ok	-	-	When opened displays the internal information about the settings. If the value differs from 0, the settings are not correct.

© Arcteq Relays Ltd

Name	Range	Step	Default	Description
Vreg condition	• Raise command on • Lower command on • Operation blocked • Output control blocked • U<<< block on • I> block on • Tap on highlimit • Tap on lowlimit • Operation blocked • U>/< pick-up on • U>>/<< pick-up on • Control wait time on • Manual control mode on	-	-	When opened displays the internal information about the automatic voltage regulator's current status. When the value is 0, nothing is happening.
Vreg timer active	• - • Fine tune decrease • Fine tune increase • Low set decrease • High set decrease • Instant decrease • Low set increase • High set increase	-	-	Displays the timer, when the AVR is counting time. Time left to operation is indicated by the "Time left to operation" parameter.
Time left to operation	0.000…1800.000s	0.005s	-	Displays the time the counter has left before action. The "Vreg timer active" parameter displays which timer is counting down.
Voltage now	0.00…140.00%U_n	0.01%U_n	-	Displays the measured reference voltage.
Voltage difference to set target	0.00…140.00%U_n	0.01%U_n	-	Displays the difference between the measured reference voltage and the set target voltage.
Voltage set now to	-50 000…50 000V_{pri}	0.01V_{pri}	-	Displays the primary voltage deviation. Based on the location of the tap changer. Calculation formula is "Absolute tap location" times "Tap step effect".
U>>> (instant) setting	0.00…140.00%	0.01%	-	Displays the set instant stage (compared to the nominal 100 % level).

Name	Range	Step	Default	Description
U>> setting	0.00…140.00%	0.01%	-	Displays the set upper limit of the second window (compared to the nominal 100 % level).
U> setting	0.00…140.00%	0.01%	-	Displays the set upper limit of the first window (compared to the nominal 100 % level).
U< setting	0.00…140.00%	0.01%	-	Displays the set lower limit of the first window (compared to the nominal 100 % level).
U<< setting	0.00…140.00%	0.01%	-	Displays the set lower limit of the second window (compared to the nominal 100 % level).
U<<< (block) setting	0.00…140.00%	0.01%	-	Displays the set undervoltage blocking limit.
Voltage measurement	• U12 • U23 • U31 • U4 input	-	U12	Displays the selected voltage. Please check that the selected voltage input is correct.
Voltage measurement condition	• Not configured • System U12 • System U23 • System U31 • VT4 meas U12 • VT4 meas U23 • VT4 meas U31 • VT4 conf not ok	-	-	Displays which voltage is used by the function.
Tap location (– 0 +)	-30…30	1	0	The tap location in the tap changer, in relation to the middle point.
Absolute tap location	0…50	1	0	The tap location in the tap changer, in relation to the whole range (0…max) of tap steps.
Tap changer on high border	• No • Yes	-	No	Indicates when the tap changer has reached the maximum voltage high position.
Tap changer on low border	• No • Yes	-	No	Indicaters when the tap changer has reached the minimum voltage low position.

Control settings

The control settings define the control model as well as the manual increasing and decreasing commands from the HMI. The timing controls are here as well.

© Arcteq Relays Ltd

Table. 4.6.2 - 466. Control settings parameters.

Name	Range	Step	Default	Description
Control mode	• Auto • Manual	-	Auto	Displays the control mode: automatic or manual.
Max control pulse length	0.000…1800.000s	0.005s	2.000s	Sets the maximum time the tap control's output contact can be closed.
Min control pulse length	0.000…1800.000s	0.005s	2.000s	Sets the minimum time the tap control's output contact must be closed.
Min time between pulses	0.000…1800.000s	0.005s	0.500s	Sets the minimum time between the separate consecutive control commands.

Tap settings

The tap settings define the tap changer equipment properties and the connection for position indication to the regulator. The tap settings also include indicators and measurements.

Table. 4.6.2 - 467. Tap settings parameters.

Name	Range	Step	Default	Description
Tap position indication	• Select • mA internal input 7 • mA internal input 8 • mA external input • Scaled input • Binary coded inputs • mAIn1 (I card 1) • mAIn2 (I card 2) • BCD coded inputs • mAIn1 (T card 1) • mAIn2 (T card 1) • mAIn3 (T card 1) • mAIn4 (T card 1) • mAIn1 (T card 2) • mAIn2 (T card 2) • mAIn3 (T card 2) • mAIn4 (T card 2)	-	Select	Selects the tap changer's input mode. The "mA internal input x" options are the mA inputs found in the RTD and mA input cards. The "mA external input" option is an external ADAM mA input device connected to the RS-458 port. The "Scaled input" option in an input that has been scaled at *Measurements → AI(mA, DI volt) scaling*. The "BCD coded inputs" and "Binary coded inputs" options refer to the digital inputs. The "mAIn x" options are the mA inputs included in the mA input card.
Tap position indication setting	• Not selected • Set Ok • Wrong setting • Meas.Quality Fault.	-	Not selected	Displays the health of tap position status setting. Informs if the chosen measurement is not available or the quality of the measurement is not good.

Name	Range	Step	Default	Description
External mA input channel	• CH0 • CH1 • CH2 • CH3 • CH4 • CH5 • CH6 • CH7	-	CH0	Selects the external mA input channel. This setting is only visible when "mA external input" is the selected input mode.
Scaled input signal	• Scaling curve 1 (mA) • Scaling curve 2 (mA) • Scaling curve 3 (mA) • Scaling curve 4 (mA) • Scaling curve 1 (position) • Scaling curve 2 (position) • Scaling curve 3 (position) • Scaling curve 4 (position)	-	Scaling curve 1 (mA)	Selects the scaled input signal. This setting is only visible when "Scaled input" is the selected input mode.
Tap position ind. setting	• Not selected • Set Ok • Wrong setting • Meas.Quality Fault.	-	-	Indicates the status of tap position indication settings. A read-only parameter.
Tap total positions (absolute value 1-n)	1…70n	1n	18n	Defines the number of tap positions.
Tap center (on absolute scale)	1…35 position	1 position	10 position	Defines the center tap location on the absolute scale.
Tap step effect	0.01…10.00%	0.01%	1.67%	Defines the effect of a step (in percentage based on the nominal voltage).
Tap step voltage effect	0.00…5000.00V_{pri}	0.01V_{pri}	0V_{pri}	Displays the effect of one tap step on the primary voltage.
Tap maximum decrease	-140.00…0.00%	0.01%	0%	Displays the maximum voltage decrease from the nominal position.
Tap maximum increase	0.00…140.00%	0.01%	0%	Displays the maximum voltage increase from the nominal position.
Tap control band	0.00…140.00%	0.01%	0%	Displays the tap changer's control band.

© Arcteq Relays Ltd

Name	Range	Step	Default	Description
Tap position indication	• Max.mA.max.Pos. • Min.mA.max.Pos	-	Max.mA.max.Pos	Selects the hightest tap position, the maximum or the minimum value of mA measurement. This setting is not visible when "BCD coded inputs" or "Binary coded inputs" is the selected input mode.
mA input low range	0.000…20.000mA	0.001mA	4.000mA	Sets the minimum tap position measurement value. This setting is not visible when "BCD coded inputs" or "Binary coded inputs" is the selected input mode.
mA input high range	0.010…20.000mA	0.001mA	20.000mA	Sets the maximum tap position measurement value. This setting is not visible when "BCD coded inputs" or "Binary coded inputs" is the selected input mode.
Tap step in mA	0.000…20.000mA	0.001mA	0mA	Sets the effect of one tap step on the mA measurement. This setting is not visible when "BCD coded inputs" or "Binary coded inputs" is the selected input mode.
mA input now (from the measurement)	0.000…20.000mA	0.001mA	-	Displays the mA input measurement value at the moment. This setting is visible, when any of the mA inputs is selected.
mA input now (in the set range)	0.000…20.000mA	0.001mA	-	Displays the mA input measurement value at the moment in the location indication range. For example, if the indication range is 4...20 mA and 6 mA is measured by the chosen channel, this parameter displays "2 mA". This setting is visible, when any of the mA inputs is selected.

Statistics

These parameters display the counters of the AVR's common operations and statuses.

Table. 4.6.2 - 468. Counters of the automatic voltage regulator function.

Name	Range	Description
AVR raised voltage	One tap control operation increases cumulative sum by 1	Displays how many times the regulator has increased the bus voltage.
AVR reduced voltage	One tap control operation increases cumulative sum by 1	Displays how many times the regulator has decreased the bus voltage.
AVR control blocked	One blocking operation increases cumulative sum by 1	Displays how many times the AVR operation has been blocked by an external command.

Name	Range	Description
AVR undervoltage blocked	One blocking operation increases cumulative sum by 1	Displays how many times the AVR operation has been blocked by a detected undervoltage condition.
AVR overcurrent blocked	One blocking operation increases cumulative sum by 1	Displays how many times the AVR operation has been blocked by a detected overcurrent condition.
Clear statistics	• - • Clear	Clears the statistics and resets the counters to zero.

Active settings

These settings define the AVR's regulating behavior.

Table. 4.6.2 - 469. Active setting parameters.

Name	Range	Step	Default	Description
Voltage measurement	• U12 • U23 • U31 • U4	-	U12	Selects the measured system voltage from the UL12, UL23, UL31 and U4 inputs.
Target voltage (UTGT)	70.00…140.00%U_n	0.01%U_n	100.00%U_n	Sets the optimal regulating target voltage.
U>/< window in use	• Not in use • In use	-	Not in use	Selects whether or not the low-set definite time voltage window is in use.
U> setting (+UTGT)	0.10…30.00%U_n	0.01%U_n	0.88%U_n	Sets the "voltage high" limit for the low-set voltage window. This setting is only visible, when the "U>/< window in use" parameter is activated.
U< setting (-UTGT)	0.10…30.00%U_n	0.01%U_n	0.88%U_n	Sets the "voltage low" limit for the low-set voltage window. This setting is only visible, when the "U>/< window in use" parameter is activated.
U>/< time delay (DT)	0.000…1800.000s	0.005s	60.000s	Sets the operating time delay before a regulating command is sent for the low-set voltage window's threshold deviation. This setting is only visible, when the "U>/< window in use" parameter is activated.
U>>/<< window in use	• Not in use • In use	-	Not in use	Selects whether or not the high-set definite/ inverse time voltage window is in use.
U>> setting (+UTGT)	0.10…30.00%U_n	0.01%U_n	2.67%U_n	Sets the "voltage high" limit for the high-set voltage window. This setting is only visible, when the "U>>/<< window in use" parameter is activated.

© Arcteq Relays Ltd

Name	Range	Step	Default	Description
U<< setting (-UTGT)	0.10…30.00%U_n	0.01%U_n	2.67%U_n	Sets the "voltage low" limit for the high-set voltage window. This setting is only visible, when the "U>>/<< window in use" parameter is activated.
U>>/<< time delay mode	• Definite • Integral	-	Integral	Selects the time delay mode for the high-set voltage window.
U>>/<< time delay (DT/ Multiplier)	0.000…1800.000s	0.005s	60.000s	Sets the operating time delay before a regulating command is sent for the high-set voltage window's threshold deviation. If the "Definite" time delay mode is selected, this value is equal to the set delay time. If the "Integral" time delay mode is selected, this setting is the inverse operating time multiplier. This setting is only visible, when the "U>>/<< window in use" parameter is activated.
U>>> instant in use	• Not in use • In use	-	Not in use	Selects whether or not the instant low stage is in use.
U>>> setting (+UTGT)	0.10…30.00%U_n	0.01%U_n	8.33%U_n	Sets the overvoltage threshold for the U>>> instant low stage. This setting is only visible, when the "U>>> instant in use" parameter is activated.
U<<< block setting (-UTGT)	0.00…80.00%U_n	0.01%U_n	15.00%U_n	Sets the undervoltage blocking threshold. When measured voltage is under this level, tap control is blocked.
Internal OC blocking	• Not in use • In use	-	Not in use	Selects whether or not the internal overcurrent detection blocks the AVR operation.
Internal OC pick-up >	0.00…40.00×I_n	0.01×I_n	2.00×I_n	Sets the pick-up threshold for the internal overcurrent blocking. This setting is only visible, when the "Internal OC blocking" is activated.

External blocking

The operation of the automatic voltage regulator can be blocked by either internal or external input commands. If the operation needs to be blocked externally, it can be done with digital inputs, logical signals or GOOSE messages. The AVR function provides two separate inputs for blocking. The first blocking input blocks the control algorithm's operation and the output contacts. This type of blocking is intended to be used for blocking tap changer that is in active use. The second one only blocks the output contacts while the control algorithm is still operational. This type of blocking can be used to test the operation of algorithm and event recording without physically controlling the tap changer.

Table. 4.6.2 - 470. Blocking inputs.

Name	Description
AVR Block op and outs	The application block for the AVR function. This block should be used for all external blockings of the AVR operation. Blocks the output contacts and prevents the algorithm from operating.

Name	Description
AVR block control outs	The commissioning block for the actual controlling of the output contacts. Blocks only the output contacts of the AVR function.

Output signals

The AVR function has the following available output signals.

Table. 4.6.2 - 471. Output signals.

Name	Description
AVR raise tap CMD	The output command to raise the tap by one step.
AVR lower tap CMD	The output command to lower the tap by one step.
AVR in manual control	Indicates that the automatic voltage regulation mode is overridden by a manual control.
AVR U>/< started	Indicates that the threhold of the first voltage window has been exceeded, and that the AVR is counting time towards the tap change operation.
AVR U>>/<< started	Indicates that the threhold of the second voltage window has been exceeded, and that the AVR is counting time towards the tap change operation.
AVR outputs blocked	Indicates that the output contact control is blocked, and that the actual output signals and events are not given to the tap changer.
AVR operation blocked	Indicates that the AVR algorithms and measurements are blocked.
AVR control wait on	Indicates that the time delay of the AVR's consecutive controls is activated. Further output commands are suppressed until this signal is released.
AVR U< block active	Indicates that the internal undervoltage blocking of the tap change operation is active.
AVR I> block active	Indicates that the internal overcurrent blocking of the tap change operation is active.
AVR tap in highlimit	Indicates that no further voltage increase commands can be given because the tap changer is on the high limit.
AVR tap in lowlimit	Indicates that no further voltage decrease commands can be given because the tap changer is on the low limit.

© Arcteq Relays Ltd

Switching between automatic and manual control modes remotely and locally

If the user wants to switch between the manual and automatic control modes remotely and locally, the most practical way to do it is to use a logical input. Connect the logical input of your choice at *Control* → *Control functions* → *Voltage regulator* → *I/O* → *Input signal control* → "AVR to manual control". After the input has been set and the logic has been loaded to the device, ithe user can switch between manual and automatic control modes through a SCADA connection. If the user requires local control for the mode switching, one needs to set a virtual button in the mimic to control the chosen logical input. In the mimic editor (*Tools* → *Mimic editor*) set an item in the mimic and click the button "From library", and then select one of the control button icons. Next, choose which logical input this button controls, and make sure that the two images in the item are following the status of the correct logical input (see the image below).

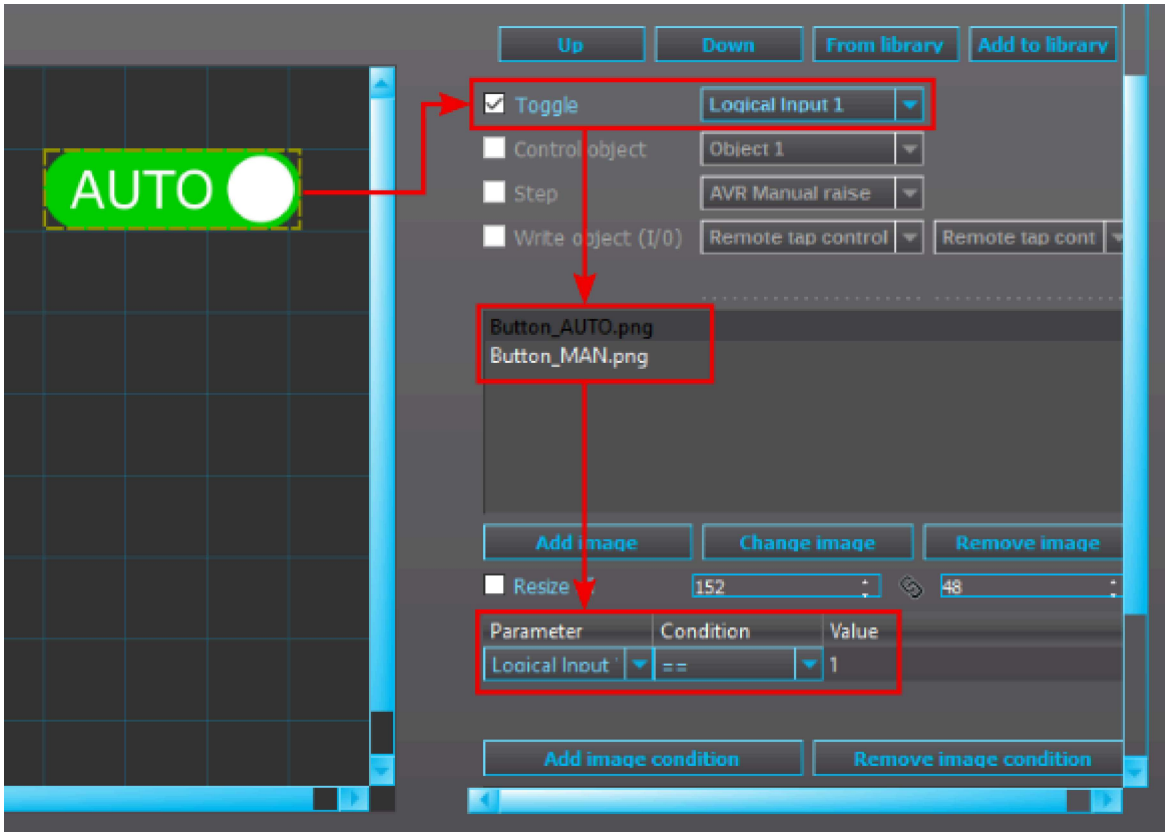

When the mimic is loaded to the device, this virtual button can be controlled in through the device HMI panel: choose it with the Ctrl button and then use the I and 0 buttons to activate the manual and automatic modes.

Controlling the tap changer in manual mode with User-buttons

The twelve function buttons next to display can be used to manually control the tap changer. To do this, simply set the desired push buttons at *Control* → *Control Functions* → *Voltage regulator* → *I/O* → *Input Signal Control* → "AVR Manual raise" or "AVR Manual lower". Please make sure that the chosen push buttons are in the Press release mode (*Control* → *User-button Settings* → *User-button Description Settings*). Please note that unit has to be in the manual mode for these button presses to take effect.

WARNING!
It is not recommended to connect push buttons directly to the tap changer's raising and lowering output contacts at *Control* → *Device IO* → *Device IO matrix*. If they are, the device is not capable of prohibiting manual control when the voltage regulator function is in the automatic mode.

Controlling the voltage regulator remotely with IEC 61850

The automatic voltage regulator can also be controlled both locally and remotely with the IEC 61850 communication protocol. This requires that the voltage regulator is added to a dataset. Then the regulator can be controlled at *VRG AVCO/TapChg/Oper.* where "0" means "Stop", "1" means "Raise", and "2" means "Lower".

Events and registers

The automatic voltage regulator function (abbreviated "VRG" in event block names) generates events and registers from the status changes in the events listed below. The user can select which event messages are stored in the main event buffer: ON, OFF, or both. The events triggered by the function are recorded with a time stamp.

Table. 4.6.2 - 472. Event messages.

Event block name	Description
VRG1	Tap Raise command ON/OFF
VRG1	Tap Lower command ON/OFF
VRG1	Block operation ON/OFF
VRG1	Block Output commands ON/OFF
VRG1	Low voltage blocking ON/OFF
VRG1	Overcurrent blocking ON/OFF
VRG1	Tap on highlimit ON/OFF
VRG1	Tap on lowlimit ON/OFF
VRG1	Operation blocked ON/OFF
VRG1	U>/< Start ON/OFF
VRG1	U>>/<< Start ON/OFF
VRG1	Control wait time ON/OFF
VRG1	Manual control mode
VRG1	Automatic control mode
VRG1	Tap raise request ON/OFF
VRG1	Tap lower request ON/OFF
VRG1	Tap control circuit failure ON/OFF
VRG1	Tap difference failure ON/OFF
VRG1	Parallel communication failure ON/OFF
VRG1	Transformer independent control mode
VRG1	Transformer parallel control mode
VRG1	Tranformer operates as Master

© Arcteq Relays Ltd

VRG1	Tranformer operates as Follower
VRG1	Circulating reactive current mode
VRG1	Master and follower mode

The function registers its operation into the last twelve (12) time-stamped registers; this information is available for all provided instances separately. The register of the function records the ON event process data for Tap raise/lower, low voltage blocking, overcurrent blocking and other events. The table below presents the structure of the function's register content.

Table. 4.6.2 - 473. Register content.

Register	Description
Date and time	dd.mm.yyyy hh:mm:ss.mss
Event	Event name
Voltage now	Voltage at the moment of event
Tap now	Target voltage
Target volt	Target voltage
Control mode	• Auto • Manual
Setting group in use	Setting group 1...8 active

4.6.3 Parallel voltage regulator

Automatic voltage regulator function is able to control up to four transformer tap changers in parallel with plug and play GOOSE configuration. Tap control can be switched between parallel and independent control modes. Mimic can be set up to display feedback from each transformer. Tap control can be either in "Master & follower" mode or "Circulating current" control mode.

Setting up communication between the devices

Enable IEC61850 at *Communication → Protocols → IEC61580/GOOSE → IEC61850* with *Enable IEC61850* parameter. Then enable GOOSE subscriber at *Communication → Protocols → IEC61580/GOOSE → GOOSE* with *GOOSE subscriber enable* parameter.

Each voltage regulating device must have a unique ID number chosen. This can be done at *Control → Control functions → Voltage regulator* menu with *Local paraller transformer ID* parameter. Define the total number of voltage regulating devices with *Parallel group relays* parameter. If the number of detected voltage regulating devices doesn't match with *Parallel group relays* setting, an alarm will be issued.If there are four voltage regulating devices, the devices must be given an ID from 1 to 4.

NOTICE!
Each time a device ID or parallel group setting is changed, the GOOSE subscriber restarts and updates automatically.

For the GOOSE communication to become operational, the following conditions need to be met:

- Voltage regulator function is enabled

- "Transformer parallel operation" parameter is set to "On"
- Local parallel transformer ID is set.

General settings

This chapter describes parameters and settings for parallel tap changer applications. Basic settings for single tap changer applications are described in chapter titled "Automatic voltage regulator (90)".

Table. 4.6.3 - 474. General setting parameters.

Name	Range	Step	Default	Description
CT selection	• CT1 • CT2	-	CT1	Circulating current measurement mode requires current negative sequence component measurement, which is achieved by connecting three phase currents to the device CT inputs. It is necessary to choose which side CT is used for tap changer circulating current measurement.
Transformer parallel operation	• Off • On	-	Off	As a default, the device operates as an independent tap controller unit. For parallel operation use choose "On" instead. This activates all hidden parallel tap control menus.
Parallel operation	• Parallel mode • Independent mode	-	Independent mode	By setting a transformer to "Independent mode", it is possible to isolate it from the parallel operation, allowing the remaining transformers to continue operating in parallel mode. This flexibility is crucial for the efficient and reliable management of power systems.
Control mode	• Auto • Manual	-	Auto	Whether automatic tap control is in use or not. This setting can be bypassed with logic programming.
Local parallel hierarchy	• Master & follower • Circulating reactive current	-	Master & follower	Parallel control method selection. In "master follower" mode, the master operates as an independent transformer and the follower operates based on leading device operations. In "circulating reactive current" mode, all devices are controlling based on a formula that is trying to minimize the circulating current and voltage difference between parallel controlled transformers.
Status	• Follower • Master	-	-	Follower device is trying to mimic either master device tap position or tap +/- control pulses. There can be only one master device selected at a time. When communication is operational between the devices, “only one master” is monitored automatically and it is not possible to choose two masters simultaneously. This parameter is only displayed when the function has been set to "Master & follower" mode.
Follow operation	• Follow master raise/lower commands • Follow master tap position	-	Follow master raise / lower commands	Follower devices are giving tap +/- commands based on either master tap position or master raise/lower commands.

© Arcteq Relays Ltd

Name	Range	Step	Default	Description
Allowed tap difference	• No diff • 1-8 steps	-	1 steps	In case master device operates and following device leaves behind for more than allowed tap difference, a tap difference error will take place if maximum allowed tap difference time is exceeded.
Maximum allowed tap difference time	0.0...1800.0 s	0.1 s	60 s	
Transformer rated apparent power (Sn)	1.0...400.0 MVA	0.1 MVA	40.0 MVA	These values are used for calculating transformer Xk value. Xk value is used in circulating current control mode. Transformer rated voltage displays the rated voltage defined in *Measurements → Transformers → VT module*.
Transformer rated voltage (Un)	1.0...400.0 kV	0.1 kV	20.0 kV	
Transformer short circuit impedance (Zk%)	1.0...20.0 %	0.1 %	3.0 %	
Local parallel transformer ID	1...9	1	N/A	Device ID. Each voltage regulating device must have a unique ID number to operate correctly and without communication errors. Always start choosing device IDs from 1 and proceed accordingly with second, and then third optional third device etc.
Parallel group relays	• Relay IDs 1 - 2 • Relay IDs 1 - 3 • Relay IDs 1 - 4	-	Relay IDs 1 - 2	Choose how many parallel voltage regulating devices are used in application. If more or less, than the actual used amount is selected, communication alarm will activate.
Tap low/high limit blocking	• Disabled • Enabled	-	Disabled	Once tap has reached the bottom or the top limit, control towards outside the control range is blocked. Once low or high limit is reached a corresponding alarm can be assosiated in output matrix and logic.
Tap control failure blocking	• Disabled • Enabled	-	Disabled	Once enabled, a possible tap control failure will disable automatic tap control in "Master & follower" mode.
Clear tap control failure	• - • Clear	-	-	Clear active tap control failure alarm.
Tap control failure blocking (send remote)	• Disabled • Enabled	-	Disabled	Sends tap control failure indication to remote devices. Activates "AVR/block: remote block active" logical input in receiving devices.
Communication failure blocking (send remote)	• Disabled • Enabled	-	Disabled	Sends communication failure indication to remote devices. Activates "AVR/block: parallel communication failure" logical input in receiving devices.
No master selected blocking (send remote)	• Disabled • Enabled	-	Disabled	Sends no master selected failure indication to remote devices. Activates "AVR/block: no master selected" logical input in receiving devices.

Name	Range	Step	Default	Description
Tap differential blocking (send remote)	• Disabled • Enabled	-	Disabled	Sends tap differential failure indication to remote devices. Activates "AVR/block: tap differential failure" logical input in receiving devices.

Settings

Table. 4.6.3 - 475. General setting parameters.

Name	Range	Step	Default	Description
Tap voltage measurement	• U12 • U23 • U31 • U4 input	-	U12	Select tap voltage measurement input.
U>/< fast tap recontrol delay T2 in use	• Not in use • In use	-	Not in use	Activate fast tap re-control for independent and master follower schemes. Fast re-control delay is used if first control command is not sufficient to achieve proper system voltage level.
U> setting (+UTGT)	0.10...30.00 %Un	0.01 %Un	1.50 %Un	UTGT setting window operates as a pickup for an independent transformer. In master/follower mode, the master device operates as an independent transformer device and uses UTGT setting for operation. Follower device follows master activity. Same U>/U< setting is also used in circulating reactive current mode.
U< setting (-UTGT)				
U>/< T1 time delay (DT)	0.000...1800.000 s	0.001 s	6.000 s	This time delay is used in master/follower mode and when transformer operates as an independent unit.
U>/< T2 fast recontrol delay (DT)	0.000...1800.000 s	0.001 s	30.000 s	This time delay is used in master/follower mode and when transformer operates as an independent unit.
Reactive control factor k	0.1...10.0	0.1	1.0	Reactive control factor for circulating reactive current mode.
Circulating current time delay (Slow T1)	0.000...1800.000 s	0.001 s	20.0 s	Primary tap control time delay in circulating reactive current mode. Runs when pickup conditions for I_{CRC} mode are fulfilled.
Circulating current time delay (Fast T2)	0.000...1800.000 s	0.001 s	10.0 s	Faster secondary time delay for I_{CRC} mode. Follows T1 delay in case conditions are met.

Measurements

The following measurements are available in the function menus.

© Arcteq Relays Ltd

Table. 4.6.3 - 476. Measurements used by the parallel voltage regulator function.

Name	Range	Step	Description
Circulating current (A)	-50000.00…50000.00 A	0.01 A	Measured circulating reactive current amplitude and direction (+/-) from our device perspective
Circulating current deviation (%Un)	-50000.00…50000.00 %Un	0.01 %Un	Measured circulating reactive current amplitude and direction (+/-) converted to voltage from our device perspective. [Idev]
Voltage deviation (%Un)	-50000.00…50000.00 %Un	0.01 %Un	Voltage deviation indicates the difference between measured bus voltage level and nominal bus voltage. [Udev]
Total deviation (%Un)	-50000.00…50000.00 %Un	0.01 %Un	Total deviation combines the measured voltage deviation together with circulating current (voltage) deviation. [Dtot]

The following measurements can be added to the device display mimic:

- Transformer ID status to mimic, own transformer ID to display (variable number)
- Circulating current (A), circulating current Amperage
- Circulating current deviation (%Un), circulating current amplitude as per voltage
- Voltage deviation (%Un), bus voltage deviation to nominal
- Total deviation (%Un), bus voltage + circulating current total deviation
- Tap voltage (kV), measured tap voltage (kV)
- Voltage difference (kV), measured voltage difference to nominal bus voltage level (kV)
- Time left to operation (s), estimated time left to tap control
- Voltage now (kV), measured bus voltage (kV)
- Voltage difference to set target, indicates the difference between measured voltage and target voltage
- Voltage set now to, indicates the tap control activation limit
- Tap location now (- 0 +), tap position (own transformer)
- Absolute tap location, absolute tap position (own transformer)
- T1-T4 tap location now (- 0 +), from GOOSE, tap position (other transformers)
- T1-T4 voltage deviation, from GOOSE, voltage deviation (other transformers)
- T1-T4 circulating current deviation, from GOOSE, circ. curr. %Un (other transformers)
- T1-T4 total deviation, from GOOSE, total deviation (other transformers)

Following visibility conditions are available in the mimic editor:

- Follower operation status to mimic, follow master raise/lower or tap
- AVR tap control status, when tap is controlled up or down
- T1-T4 Auto/Manual, from GOOSE, auto/manual status (other transformers)
- T1-T4 Independent/parallel, from GOOSE, independent/parallel status (other transformers)
- AVR Independent/parallel status to mimic, independent/parallel status (own transformer)
- AVR Follower/Master status to mimic, follower/master status
- AVR no master selected, no master selected among any parallel device
- No parallel communication, no parallel communication failure
- AVR tap differential failure, tap differential failure
- Tap high limit reached, tap high limit reached alarm
- Tap low limit reached, tap low limit reached alarm
- AVR circulating current mode failure, circulating reactive current failure
- Current master, which parallel device is currently master (ID value)
- Hierarchy status to mimic, single/parallel status
- Auto/Manual status to mimic

You can adjust premade default mimic for up to four parallel transformers based on application needs.

Device internal logic VRG> signals

Following logical signals are available in parallel tap changer function (on top of independent use):

- AVR independent, parallel, master, follower, circulating reactive current, master & follower, manual, auto and tap control status input statuses are available in logic
- T1-T4 Auto/Manual
- T1-T4 Independent/Parallel
- T1-T4 tap voltage
- AVR no master selected
- AVR parallel communication failure
- AVR tap differential failure
- AVR circulating current mode failure

Circulating reactive current operating mode

In circulating reactive current mode, the tap control is decided based on several criteria's:

- Current tap position value
- Bus/tap voltage level compared to the nominal value (Udev)
- Measured circulating reactive current amplitude and direction (Idev)

Once above-mentioned terms are fulfilled, tap control takes place after deviation delay T1 has passed. In case one control step will not resolve the matter, another step is taken with faster time delay T2.

In master & follower mode, the tap control operation is based on UTGT+/- voltage windows. Once voltage drops or increases the set limit, master device controls and following device will follow. Few basic operating principles are presented below:

Figure. 4.6.3 - 222. VRG> circulating reactive current mode operating principle.

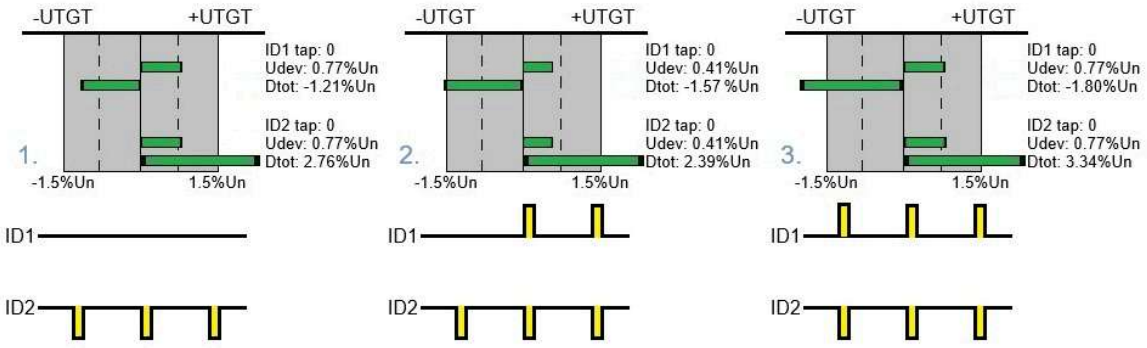

1. Example 1: Voltage deviation (U_{DEV}) is higher than 50% of the UTGT setting (1.50% Un). Circulating current creates its own effect on the total deviation, causing transformer ID1's deviation to drop to –1.21% Un, which is less than the UTGT setting. The total deviation of transformer ID2 is +2.76% Un, and, as shown in the picture above, ID2 controls the tap downward.
2. Example 2: The voltage deviation (U_{DEV}) is less than 50% of the UTGT setting of 1.50% Un. The circulating current creates its own effect on the total deviation, causing transformer ID1's total deviation to drop to -1.57% Un, which is higher than the UTGT setting. The total deviation of transformer ID2 is +2.39% Un and, as shown in the picture above, ID2 controls the tap downward. However, if the situation persists, ID2 will attempt another downward tap control while transformer ID1 controls the tap upward.

© Arcteq Relays Ltd

3. Example 3: The voltage deviation (U_{DEV}) is less than 50% of the UTGT setting (1.50% Un). Transformer ID1's total deviation drops to –1.80% Un, which is higher than the UTGT setting. The total deviation for Transformer ID2 is +3.34% Un, and, as shown in the figure above, ID2 controls the tap downwards at the same time that Transformer ID1 controls the tap upwards.

NOTICE!
Circulating current mode follows "Max control pulse length" and "Minimum time between pulses" time delays. In case maximum control pulse length is 2 seconds and time between is 5 seconds, there is total of 7 second delay between T1 timer control command and starting of timer T2. The same applies if T2 timer is rerun multiple times.

Figure. 4.6.3 - 223. VRG> circulating reactive current mode

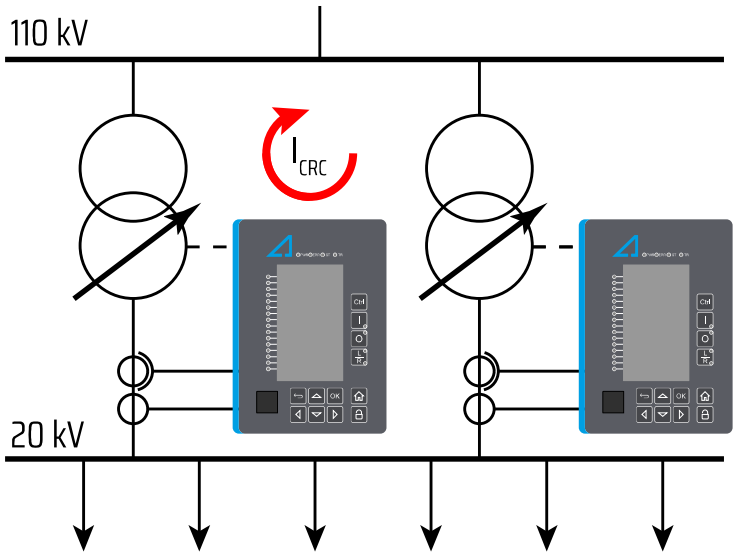

To run circulating reactive current mode properly, some transformer nameplate values such as transformer rated apparent power Sn, transformer rated voltage Un and transformer short circuit impedance Zk is required. All other data comes automatically via GOOSE messaging once communication between the devices has been established.

Figure. 4.6.3 - 224. Circulating reactive current mathematical formulas below:

$$X_k = \frac{{U_n}^2 / \sqrt{3}}{S_n} \times Z_k$$

$$I_L = \sum_{k=1}^{N} I_k$$

$$B_P \sum_{K=1}^{N} \frac{1}{X_k}$$

$$I_{Lm} = Im(I_L) \frac{1}{X_k \times B_P}$$

$$I_{CRC} = -1 \times (Im(I_k) - I_{LkImag})$$

$$D_{tot} = k \times \frac{(I_{CRCk} + \frac{1}{B_P - B_k}) \times \sqrt{3}}{U_n} \times 100\%$$

- X_k is transformer reactance
- I_L is total combined current amplitude
- B_P is total combined susceptance
- $I_m(I_L)$ = current amplitude imaginary part
- I_{Lm} is total imaginary current amplitude
- I_{CRC} is circulating reactive current amperage
- D_{tot} is circulating current as per voltage
- K is circulating current reactive control factor

Master & follower operating mode

In master & follower mode, when transformers operate in parallel, one of them has to be selected as a master and the other ones follow masters decisions. There are two ways to follow the master device.

- Follow master raise and lower commands mode: When the master device is controlling tap up or down, a signal is sent between all parallel devices and follower devices will control tap similarly to master.
- Follow master tap position mode: Following devices control tap up or down based on own tap position compared to master device tap position.

Tap differential alarm is available in case master and follower tap difference increases too much in set time.

© Arcteq Relays Ltd

I/O and function blocking

Following conditions can be altered from AQtivate -setting tool, local device settings, with digital inputs and logical nodes/outputs. It is possible to control an input simultaneously with logic or digital input, since operation of stage uses non-volatile SR-latch. Device logic can be controlled through SCADA or device local MIMIC in case programmable function buttons are configured.

Table. 4.6.3 - 477. Logical inputs of the function.

Setting	Description
AVR independent	Change voltage regulator status to independent transformer.
AVR parallel	Change transformer to operate in parallel with other transformer units.
AVR master	Change parallel operating transformer to work as a master. Only one master can be selected at a time, in case communication is properly set.
AVR follower	Change parallel operating transformer to work as a follower. Once all parallel devices are followers, a new master can be selected.
AVR circulating reactive current	Change parallel operating device operation mode to circulating reactive current.
AVR master & follower	Change parallel operating device operation mode to master & follower.
AVR manual	Change AVR tap control to manual mode.
AVR auto	Change AVR tap control to auto mode.
Tap control status	Indicates if tap controller is in normal state or in fail state after unsuccefull tap control.
AVR manual raise	Raise transformer tap position manually while operating in manual mode.
AVR manual lower	Lower transformer tap position manually while operating in manual mode.
T1-T4 Auto/Manual	Parallel transformers 1-4 control auto or manual.
T1-T4 Independent/ Parallel	Parallel transformers 1-4 mode independent or parallel.
T1-T4 tap voltage	Parallel transformers 1-4 tap voltage level.
AVR no master selected	None of parallel transformers operates as master.
AVR parallel communication failure	One or several transformers are not communicating properly due to setting error or failure in system.
AVR tap differential failure	Follower device was not able to achieve master devices tap position in set time.
AVR circulating current mode failure	Circulating current mode is in failure state.

Automatic voltage regulator can be blocked internally with two inputs. "AVR Block control outs" blocks output relay controls but doesn't block event activations. "AVR Block op and outs" blocks all operation.

Table. 4.6.3 - 478. Suggested signals to use for blocking the AVR function.

Signal	Description
AVR no Master selected	This signal activates when function is in parallel mode, master&follower local parallel hierarchy is selected and when there is no master selected between any of the parallel device.
AVR no parallel communication	Signal activates in case communication is unplugged or interrupted for any reason or device ID/group is set wrong.
AVR tap differential failure	Tap differential failure activates when master and follower unit tap difference is greater than set limit “allowed tap difference” and operating time “maximum allowed tap difference time” has passed.
AVR circulating current mode failure: I_{CRC}	I_{CRC} mode failure is not yet implemented and signal is forced to stay active (1).

4.6.4 Setting group selection

All device types support up to eight (8) separate setting groups. The Setting group selection function block controls the availability and selection of the setting groups. By default, only Setting group 1 (SG1) is active and therefore the selection logic is idle. When more than one setting group is enabled, the setting group selector logic takes control of the setting group activations based on the logic and conditions the user has programmed.

Setting group selection can be applied to each of the setting groups individually by activating one of the various internal logic inputs and connected digital inputs. The user can also force any of the setting groups on when the "Force SG change" setting is enabled by giving the wanted quantity of setting groups as a number in the communication bus or in the local HMI, or by selecting the wanted setting group from *Control → Setting groups*. When the forcing parameter is enabled, the automatic control of the local device is overridden and the full control of the setting groups is given to the user until the "Force SG change" is disabled again.

Setting groups can be controlled either by pulses or by signal levels. The setting group controller block gives setting groups priority values for situations when more than one setting group is controlled at the same time: the request from a higher-priority setting group is taken into use.

Setting groups follow a hierarchy in which setting group 1 has the highest priority, setting group 2 has second highest priority etc. If a static activation signal is given for two setting groups, the setting group with higher priority will be active. If setting groups are controlled by pulses, the setting group activated by pulse will stay active until another setting groups receives and activation signal.

Figure. 4.6.4 - 225. Example sequences of group changing (control with pulse only, or with both pulses and static signals).

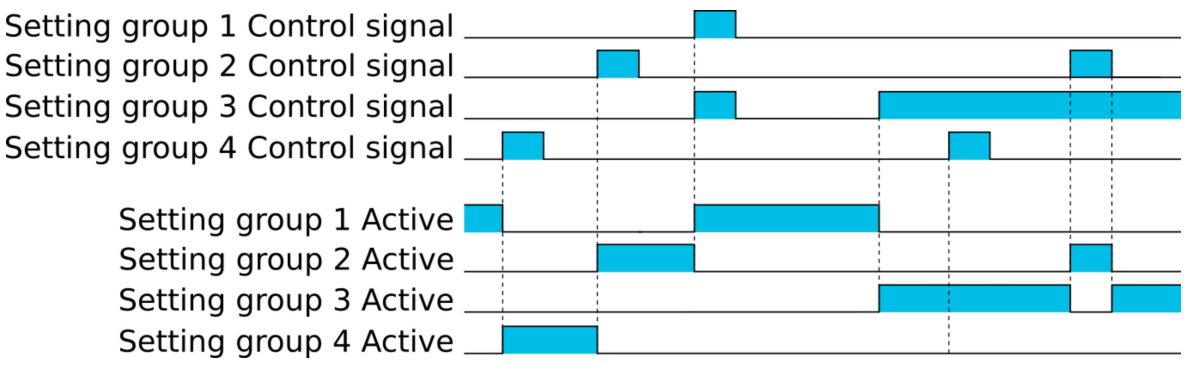

© Arcteq Relays Ltd

Settings and signals

The settings of the setting group control function include the active setting group selection, the forced setting group selection, the enabling (or disabling) of the forced change, the selection of the number of active setting groups in the application, as well as the selection of the setting group changed remotely. If the setting group is forced to change, the corresponding setting group must be enabled and the force change must be enabled. Then, the setting group can be set from communications or from HMI to any available group. If the setting group control is applied with static signals right after the "Force SG" parameter is released, the application takes control of the setting group selection.

Table. 4.6.4 - 479. Settings of the setting group selection function.

Name	Range	Default	Description
Active setting group	• SG1 • SG2 • SG3 • SG4 • SG5 • SG6 • SG7 • SG8	SG1	Displays which setting group is active.
Force setting group	• None • SG1 • SG2 • SG3 • SG4 • SG5 • SG6 • SG7 • SG8	None	The selection of the overriding setting group. After "Force SG change" is enabled, any of the configured setting groups in the device can be overriden. This control is always based on the pulse operating mode. It also requires that the selected setting group is specifically controlled to ON after "Force SG" is disabled. If there are no other controls, the last set setting group remains active.
Force setting group change	• Disabled • Enabled	Disabled	The selection of whether the setting group forcing is enabled or disabled. This setting has to be active before the setting group can be changed remotely or from a local HMI. This parameter overrides the local control of the setting groups and it remains on until the user disables it.
Used setting groups	• SG1 • SG1...2 • SG1...3 • SG1...4 • SG1...5 • SG1...6 • SG1...7 • SG1...8	SG1	The selection of the activated setting groups in the application. Newly-enabled setting groups use default parameter values.
Remote setting group change	• None • SG1 • SG2 • SG3 • SG4 • SG5 • SG6 • SG7 • SG8	None	This parameter can be controlled through SCADA to change the setting group remotely. Please note that if a higher priority setting group is being controlled by a signal, a lower priority setting group cannot be activated with this parameter.

Table. 4.6.4 - 480. Signals of the setting group selection function.

Name	Description
Setting group 1	The selection of Setting group 1 ("SG1"). Has the highest priority input in setting group control. Can be controlled with pulses or static signals. If static signal control is applied, no other SG requests will be processed.
Setting group 2	The selection of Setting group 2 ("SG2"). Has the second highest priority input in setting group control. Can be controlled with pulses or static signals. If static signal control is applied, no requests with a lower priority than SG1 will be processed.
Setting group 3	The selection of Setting group 3 ("SG3"). Has the third highest priority input in setting group control. Can be controlled with pulses or static signals. If static signal control is applied, no requests with a lower priority than SG1 and SG2 will be processed.
Setting group 4	The selection of Setting group 4 ("SG4"). Has the fourth highest priority input in setting group control. Can be controlled with pulses or static signals. If static signal control is applied, no requests with a lower priority than SG1, SG2 and SG3 will be processed.
Setting group 5	The selection of Setting group 5 ("SG5"). Has the fourth lowest priority input in setting group control. Can be controlled with pulses or static signals. If static signal control is applied, SG6, SG7 and SG8 requests will not be processed.
Setting group 6	The selection of Setting group 6 ("SG6"). Has the third lowest priority input in setting group control. Can be controlled with pulses or static signals. If static signal control is applied, SG7 and SG8 requests will not be processed.
Setting group 7	The selection of Setting group 7 ("SG7"). Has the second lowest priority input in setting group control. Can be controlled with pulses or static signals. If static signal control is applied, only SG8 requests will not be processed.
Setting group 8	The selection of Setting group 8 ("SG8"). Has the lowest priority input in setting group control. Can be controlled with pulses or static signals. If static signal control is applied, all other SG requests will be processed regardless of the signal status of this setting group.

Events

The setting group selection function block (abbreviated "SGS" in event block names) generates events from the status changes in the events listed below. The user can select which event messages are stored in the main event buffer: ON, OFF, or both. The events triggered by the function are recorded with a time stamp.

Table. 4.6.4 - 481. Event messages.

Event block name	Event names
SGS	SG2...8 Enabled/Disabled
SGS	SG1...8 Request ON/OFF
SGS	Remote Change SG Request ON/OFF
SGS	Local Change SG Request ON/OFF
SGS	Force Change SG ON/OFF
SGS	SG Request Fail Not configured SG ON/OFF
SGS	Force Request Fail Force ON/OFF

© Arcteq Relays Ltd

Event block name	Event names
SGS	SG Req. Fail Lower priority Request ON/OFF
SGS	SG1...8 Active ON/OFF

4.6.5 Object control and monitoring

The object control and monitoring function takes care of both for circuit breakers and disconnectors. The monitoring and controlling are based on the statuses of the device's configured digital inputs and outputs. The number of controllable and monitored objects in each device depends on the device type and amount of digital inputs. One controllable object requires a minimum of two (2) output contacts. The status monitoring of one monitored object usually requires two (2) digital inputs. Alternatively, object status monitoring can be performed with a single digital input: the input's active state and its zero state (switched to 1 with a NOT gate in the Logic editor).

An object can be controlled manually or automatically. Manual control can be done by local control, or by remote control. Local manual control can be done by devices front panel (HMI) or by external push buttons connected to devices digital inputs. Manual remote control can be done through one of the various communication protocols available (Modbus, IEC101/103/104 etc.). The function supports the modes "Direct control" and "Select before execute" while controlled remotely. Automatic controlling can be done with functions like auto-reclosing function (ANSI 79).

The main outputs of the function are the OBJECT OPEN and OBJECT CLOSE control signals. Additionally, the function reports the monitored object's status and applied operations. The setting parameters are static inputs for the function, which can only be changed by the user in the function's setup phase.

Settings

The following parameters help the user to define the object. The operation of the function varies based on these settings and the selected object type. The selected object type determines how much control is needed and which setting parameters are required to meet those needs.

Table. 4.6.5 - 482. Object settings and status parameters.

Name	Range	Default	Description
Local/Remote status	• Local • Remote	Remote	Displays the status of the device's "local/remote" switch. Local controls cannot override the open and close commands while device is in "Remote" status. The remote controls cannot override the open and close commands while device is in "Local" status.
Object status force to	• Normal • Openreq On • Closereq On • Opensignal On • Closesignal On • WaitNoRdy On • WaitNoSnc On • NotrdyFail On • NosyncFail On • Opentout On • Clotout On • OpenreqUSR On • CloreqUSR On	Normal	Force the status of the function. Visible only when *Enable stage forcing* parameter is enabled in *General* menu.

Name	Range	Default	Description
OBJ LN mode	• On • Blocked • Test • Test/Blocked • Off	On	Set mode of OBJ block. This parameter is visible only when *Allow setting of individual LN mode* is enabled in *General* menu.
OBJ LN behaviour	• On • Blocked • Test • Test/Blocked • Off	-	Displays the mode of OBJ block. This parameter is visible only when *Allow setting of individual LN mode* is enabled in *General* menu.
Object name	-	Objectx	The user-set name of the object, at maximum 32 characters long.
Object type	• Withdrawable circuit breaker • Circuit breaker • Disconnector (MC) • Disconnector (GND)	Circuit breaker	The selection of the object type. This selection defines the number of required digital inputs for the monitored object. This affects the symbol displayed in the HMI and the monitoring of the circuit breaker. It also affects whether the withdrawable cart is in/out status is monitored. See the next table ("Object types") for a more detailed look at which functionalities each of the object types have.
Objectx Breaker status	• Intermediate • Open • Closed • Bad	-	Displays the status of breaker. Intermediate is displayed when neither of the status signals (open or close) are active. Bad status is displayed when both status signals (open and close) are active.
Objectx Withdraw status	• WDIntermediate • WDCartOut • WDCart In • WDBad • Not in use	-	Displays the status of circuit breaker cart. WDIntermediate is displayed when neither of the status signals (in or out) are active. WDBad status is displayed when both status signals (in and out) are active. If the selected object type is not set to "Withdrawable circuit breaker", this setting displays the "No in use" option.
Additional status information	• Open Blocked • Open Allowed • Close Blocked • Close Allowed • Object Ready • Object Not Ready • Sync Ok • Sync Not Ok	-	Displays additional information about the status of the object.
Use Synchrocheck	• Not in use • Synchrocheck in use	Not in use	Selects whether the "Synchrocheck" condition is in use for the circuit breaker close command. If "In use" is selected the input chosen to "Sync.check status in" has to be active to be able to close circuit breaker. Synchrocheck status can be either an internal signal generated by synchrocheck function or digital input activation with an external synchrocheck device.
Use Object ready	• Ready High • Ready Low • Not in use	Not in use	Selects whether the "Object ready" condition is in use for the circuit breaker close command. If in use the signal connected to "Object ready status In" has to be high or low to be able to close the breaker (depending on "Ready High or Low" selection).

© Arcteq Relays Ltd

Name	Range	Default	Description
Open requests	0…2^{32}–1	-	Displays the number of successful "Open" requests.
Close requests	0…2^{32}–1	-	Displays the number of successful "Close" requests.
Open requests failed	0…2^{32}–1	-	Displays the number of failed "Open" requests.
Close requests failed	0…2^{32}–1	-	Displays the number of failed "Close" requests.
Clear statistics	• - • Clear	-	Clears the request statistics, setting them back to zero (0). Automatically returns to "-" after the clearing is finished.

Table. 4.6.5 - 483. Object types.

Name	Functionalities	Description
Withdrawable circuit breaker	Breaker cart position Circuit breaker position Circuit breaker control Object ready check before closing breaker Synchrochecking before closing breaker Interlocks	The monitor and control configuration of the withdrawable circuit breaker.
Circuit breaker	Position indication Control Object ready check before closing breaker Synchrochecking before closing breaker Interlocks	The monitor and control configuration of the circuit breaker.
Disconnector (MC)	Position indication Control	The position monitoring and control of the disconnector.
Disconnector (GND)	Position indication	The position indication of the earth switch.

Table. 4.6.5 - 484. I/O.

Signal	Range	Description
Objectx Open Status In	Digital input or other logical signal selected by the user (SWx)	A link to a physical digital input. The monitored object's OPEN status. "1" refers to the active open state of the monitored object.
Objectx Close Status In		A link to a physical digital input. The monitored object's CLOSE status. "1" refers to the active close state of the monitored object.

Signal	Range	Description
Withdrw.CartIn.Status In		A link to a physical digital input. The monitored withdrawable object's position is IN. "1" means that the withdrawable object cart is in.
Withdrw.CartOut.Status In		A link to a physical digital input. The monitored withdrawable object's position is OUT. "1" means that the withdrawable object cart is pulled out.
Objectx Ready status In		A link to a physical digital input. Indicates that status of the monitored object. "1" means that the object is ready and the spring is charged for a close command.
Sync.Check status In		A link to a physical digital input or a synchrocheck function. "1" means that the synchrocheck conditions are met and the object can be closed.
Objectx Open Command	OUT1…OUTx	The physical "Open" command pulse to the device's output relay.
Objectx Close Command		The physical "Close" command pulse to the device's output relay.

Table. 4.6.5 - 485. Operation settings.

Name	Range	Step	Default	Description
Breaker traverse time	0.02…500.00 s	0.02 s	0.2 s	Determines the maximum time between open and close statuses when the breaker switches. If this set time is exceeded and both open and closed status inputs are active, the status "Bad" is activated in the "Objectx Breaker status" setting. If neither of the status inputs are active after this delay, the status "Intermediate" is activated.
Sync wait timeout	0.02…500.00 s	0.02 s	0.2 s	If synchrocheck is used, the object will wait for a "synchrocheck ok" signal before giving the closing command. This parameter will cancel the command if synchronization is not achieved on time.
Maximum Close command pulse length	0.02…500.00 s	0.02 s	0.2 s	Determines the maximum length for a Close pulse from the output relay to the controlled object. If the object operates faster than this set time, the control pulse is reset and a status change is detected.
Maximum Open command pulse length	0.02…500.00 s	0.02 s	0.2 s	Determines the maximum length for a Open pulse from the output relay to the controlled object. If the object operates faster than this set time, the control pulse is reset and a status change is detected.
Control termination timeout	0.02…500.00 s	0.02 s	10 s	Determines the control pulse termination timeout. If the object has not changed it status in this given time the function will issue error event and the control is ended. This parameter is common for both open and close commands.
Final trip pulse length	0.00…500.00 s	0.02 s	0.2 s	Determines the length of the final trip pulse length. When the object has executed the final trip, this signal activates. If set to 0 s, the signal is continuous. If auto-recloser function controls the object, "final trip" signal is activated only when there are no automatic reclosings expected after opening the breaker.

© Arcteq Relays Ltd

Table. 4.6.5 - 486. Control settings (DI and Application).

Signal	Range	Description
Access level for MIMIC control	• User • Operator • Configurator • Super user	Defines what level of access is required for MIMIC control. The default is the "Configurator" level.
Objectx LOCAL Close control input	Digital input or other logical signal selected by the user	The local Close command from a physical digital input (e.g. a push button).
Objectx LOCAL Open control input		The local Open command from a physical digital input (e.g. a push button).
Objectx REMOTE Close control input		The remote Close command from a physical digital input (e.g. RTU).
Objectx REMOTE Open control input		The remote Open command from a physical digital input (e.g. RTU).
Objectx Application Close		The Close command from the application. Can be any logical signal.
Objectx Application Open		The Close command from the application. Can be any logical signal.

Blocking and interlocking

The interlocking and blocking conditions can be set for each controllable object, with Open and Close set separately. Blocking and interlocking can be based on any of the following: other object statuses, a software function or a digital input.

In order for the blocking signal to be received on time, it has to reach the function 5 ms before the control command.

Trip circuit supervision

Trip circuit supervision monitors the wiring from auxiliary power supply, through the device's digital output, and all the way to the open coil of the breaker. It is recommended to supervise the health of the trip circuit when breaker is closed.

The figure below presents an application scheme for trip circuit supervision with one digital input and a non-latched trip output. With this connection the current keeps flowing to the open coil of the breaker via the breaker's closing auxiliary contacts (52b) even after the circuit breaker is opened. This requires a resistor which reduces the current: this way the coil is not energized and the relay output does not need to cut off the coil's inductive current.

Figure. 4.6.5 - 226. Trip circuit supervision with one DI and one non-latched trip output.

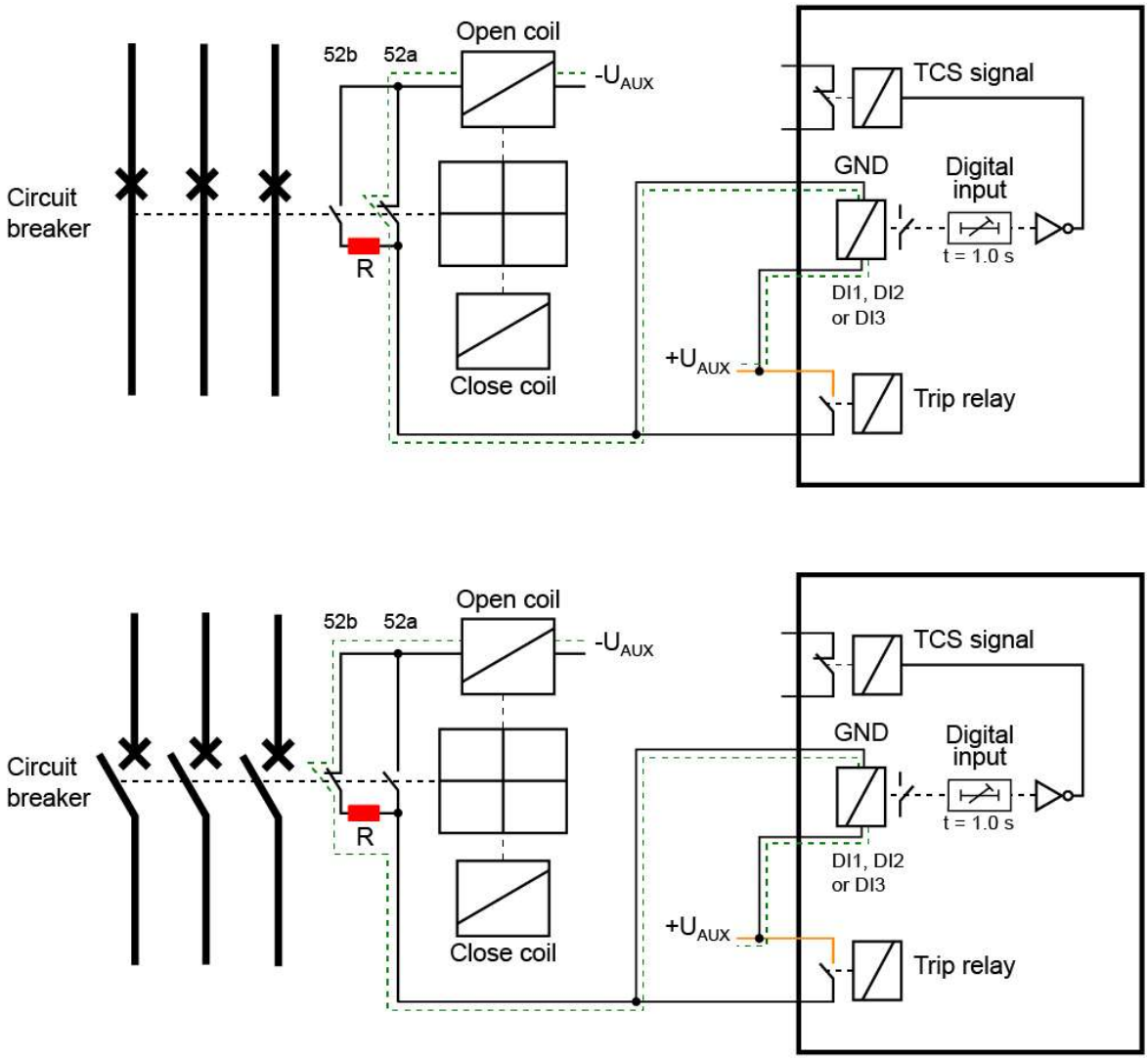

Note that the digital input that monitors the circuit is normally closed, and the same applies to the alarm relay if one is used. For monitoring and especially trip circuit supervision purposes it is recommended to use a normally closed contact to confirm the wiring's condition. An active digital input generates a less than 2 mA current to the circuit, which is usually small enough not to make the breaker's open coil operate.

When the trip relay is controlled and the circuit breaker is opening, the digital input is shorted by the trip contact as long as the breaker opens. Normally, this takes about 100 ms if the relay is non-latched. A one second activation delay should, therefore, be added to the digital input. An activation delay that is slightly longer than the circuit breaker's operations time should be enough. When circuit breaker failure protection (CBFP) is used, adding its operation time to the digital input activation time is useful. The whole digital input activation time is, therefore, $t_{DI} = t_{CB} + t_{IEDrelease} + t_{CBFP}$.

© Arcteq Relays Ltd
IM00099

Figure. 4.6.5 - 227. Trip circuit supervision with high-speed output. High-speed outputs have an internal input for trip circuit supervision.

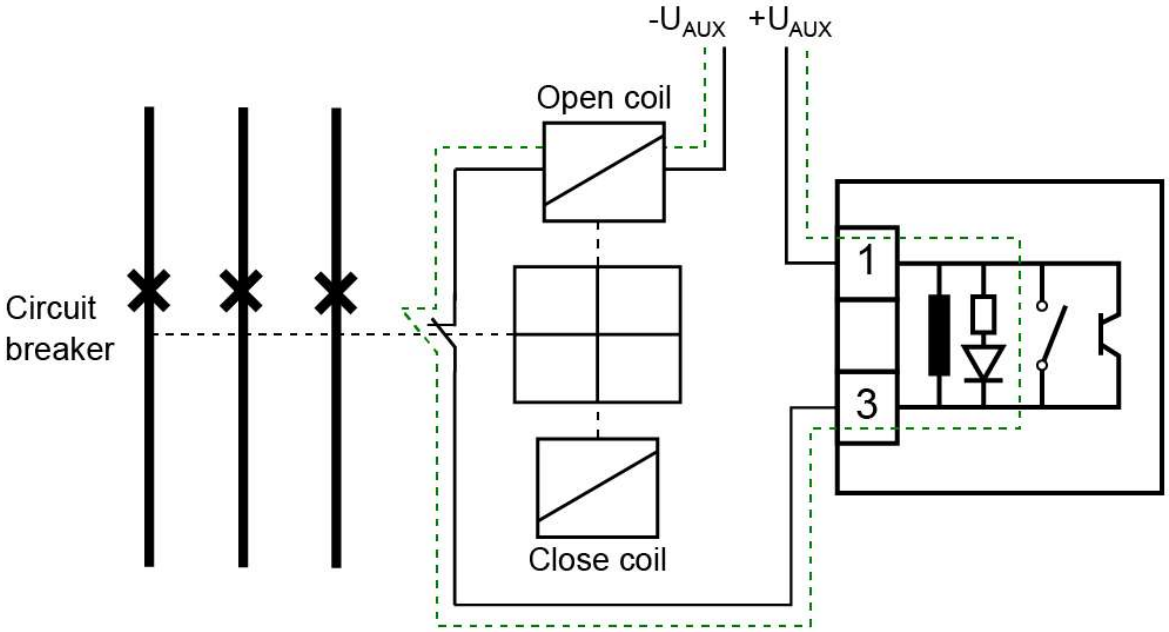

Table. 4.6.5 - 487. Trip circuit supervision settings (Control → Objects → Object X → APP CONTR → Condition monitoring).

Name	Range	Default	Description
ObjectX Trip circuit supervision	• Disabled • Enabled	Disabled	Enables the trip circuit supervision function.
ObjectX TCS Alarm activation delay	0.02…500.00 s	0.20 s	Time delay before TCS alarm is activated.
Object1 TCS input	-	-	Defines the supervised digital input, high-speed output or other signal.

Events and registers

The object control and monitoring function (abbreviated "OBJ" in event block names) generates events and registers from the status changes in the events listed below. The user can select which event messages are stored in the main event buffer: ON, OFF, or both. The events triggered by the function are recorded with a time stamp.

The function also provides a resettable cumulative counter for OPEN, CLOSE, OPEN FAILED, and CLOSE FAILED events.

Table. 4.6.5 - 488. Event messages of the OBJ function.

Event block name	Description
OBJX	Object Intermediate
OBJX	Object Open
OBJX	Object Close

Event block name	Description
OBJX	Object Bad
OBJX	WD Intermediate
OBJX	WD Out
OBJX	WD in
OBJX	WD Bad
OBJX	Open Request ON/OFF
OBJX	Open Command ON/OFF
OBJX	Close Request ON/OFF
OBJX	Close Command ON/OFF
OBJX	Open Blocked ON/OFF
OBJX	Close Blocked ON/OFF
OBJX	Object Ready
OBJX	Object Not Ready
OBJX	Sync Ok
OBJX	Sync Not Ok
OBJX	Open Command Fail
OBJX	Close Command Fail
OBJX	Final trip ON/OFF
OBJX	Contact Abrasion Alarm ON/OFF
OBJX	Switch Operating Time Exceeded ON/OFF
OBJX	XCBR Loc ON/OFF
OBJX	XSWI Loc ON/OFF
OBJX	OBJX Cond monitoring alarm 1 ON/OFF
OBJX	OBJX Cond monitoring alarm 2 ON/OFF
OBJX	OBJX Trip Circuit Supervision ON/OFF

The function registers its operation into the last twelve (12) time-stamped registers. The table below presents the structure of the function's register content.

Table. 4.6.5 - 489. Register content.

Name	Description
Date and time	dd.mm.yyyy hh:mm:ss.mss

© Arcteq Relays Ltd

Name	Description
Event	Event name
Recorded Object opening time	Time difference between the object receiving an "Open" command and the object receiving the "Open" status.
Recorded Object closing time	Time difference between the object receiving a "Close" command and object receiving the "Closed" status.
Object status	The status of the object.
WD status	The status of the withdrawable circuit breaker.
Open fail	The cause of an "Open" command's failure.
Close fail	The cause of a "Close" command's failure.
Open command	The source of an "Open" command.
Close command	The source of an "Open" command.
General status	The general status of the function.

4.6.6 Single-pole object control and monitoring

The single-pole object control and monitoring function takes care of both for circuit breakers and disconnectors. The monitoring and controlling are based on the statuses of the device's configured digital inputs and outputs. The number of controllable and monitored objects in each device depends on the device type and amount of digital inputs. One controllable single-pole object requires a minimum of four (4) output contacts. The status monitoring of single-pole object usually requires six (6) digital inputs. Alternatively, object status monitoring can be performed with a three digital inputs: the input's active state and its zero state (switched to 1 with a NOT gate in the Logic editor).

An object can be controlled manually or automatically. Manual control can be done by local control, or by remote control. Local manual control can be done by devices front panel (HMI) or by external push buttons connected to devices digital inputs. Manual remote control can be done through one of the various communication protocols available (IEC 61650, Modbus, IEC101/103/104 etc.). The function supports the modes "Direct control" and "Select before execute" while controlled remotely. Automatic controlling can be done with functions like auto-reclosing function (ANSI 79).

The main outputs of the function are the OBJECT OPEN and OBJECT CLOSE control signals. Additionally, the function reports the monitored object's status and applied operations. The setting parameters are static inputs for the function, which can only be changed by the user in the function's setup phase.

The function generates general time stamped ON/OFF events to the common event buffer from each of the two (2) output signals as well as several operational event signals. The time stamp resolution is 1 ms. The function also provides a resettable cumulative counter for OPEN, CLOSE, OPEN FAILED, and CLOSE FAILED events.

The following figure presents a simplified function block diagram of the object control and monitoring function.

Settings

The following parameters help the user to define the object. The operation of the function varies based on these settings and the selected object type. The selected object type determines how much control is needed and which setting parameters are required to meet those needs.

Table. 4.6.6 - 490. Object set and status.

Name	Range	Default	Description
Local/Remote status	• Local • Remote	Remote	Displays the status of the device's "local/remote" switch. Local controls cannot override the open and close commands while device is in "Remote" status. The remote controls cannot override the open and close commands while device is in "Local" status.
OBJS LN mode	• On • Blocked • Test • Test/Blocked • Off	On	Set mode of OBJS block. This parameter is visible only when *Allow setting of individual LN mode* is enabled in *General* menu.
OBJS LN behaviour	• On • Blocked • Test • Test/Blocked • Off	-	Displays the mode of OBJ block. This parameter is visible only when *Allow setting of individual LN mode* is enabled in *General* menu.
Single-pole object operating mode	• PhaseWise • SinglePhase • ThreePhase	Phase	Selects the operating mode of the object. PhaseWise opens all breakers if more than one phase gets open command. Three phase mode always opens every phase. Single phase mode opens each phase individually.
Single-pole object force status to	• Normal • OpenL1 On • OpenL2 On • OpenL3 On • Closesignal On • WaitNoRdy On • WaitNoSnc On • NotrdyFail On • NosyncFail On • Opentout On • Clotout On • OpenreqUSR On • CloreqUSR On	Normal	Force the status of the function. Visible only when *Enable stage forcing* parameter is enabled in *General* menu.
Object name	-	Objectx	The user-set name of the object, at maximum 32 characters long.
Object type	• Withdrawable circuit breaker • Circuit breaker • Disconnector (MC) • Disconnector (GND)	Circuit breaker	The selection of the object type. This selection defines the number of required digital inputs for the monitored object. This affects the symbol displayed in the HMI and the monitoring of the circuit breaker. It also affects whether the withdrawable cart is in/out status is monitored. See the next table ("Object types") for a more detailed look at which functionalities each of the object types have.
Single-pole object Breaker status A/B/C	• Intermediate • Open • Closed • Bad	-	Displays the status of each phase. Intermediate is displayed when neither of the status signals (open or close) are active. Bad status is displayed when both status signals (open and close) are active.

© Arcteq Relays Ltd

Name	Range	Default	Description
Objectx Withdraw status	• WDIntermediate • WDCartOut • WDCart In • WDBad • Not in use	-	Displays the status of circuit breaker cart. WDIntermediate is displayed when neither of the status signals (in or out) are active. WDBad status is displayed when both status signals (in and out) are active. If the selected object type is not set to "Withdrawable circuit breaker", this setting displays the "No in use" option.
Additional status information	• Open Blocked • Open Allowed • Close Blocked • Close Allowed • Object Ready • Object Not Ready • Sync Ok • Sync Not Ok	-	Displays additional information about the status of the object.
Use Synchrocheck	• Not in use • Synchrocheck in use	Not in use	Selects whether the "Synchrocheck" condition is in use for the circuit breaker close command. If "In use" is selected the input chosen to "Sync.check status in" has to be active to be able to close circuit breaker. Synchrocheck status can be either an internal signal generated by synchrocheck function or digital input activation with an external synchrocheck device.
Use Object ready	• Ready High • Ready Low • Not in use	Not in use	Selects whether the "Object ready" condition is in use for the circuit breaker close command. If in use the signal connected to "Object ready status In" has to be high or low to be able to close the breaker (depending on "Ready High or Low" selection).
Open commands A/B/C	$0…2^{32}–1$	-	Displays the number of successful "Open" requests.
Close commands	$0…2^{32}–1$	-	Displays the number of successful "Close" requests.
Open requests failed A/B/C	$0…2^{32}–1$	-	Displays the number of failed "Open" requests.
Close requests failed	$0…2^{32}–1$	-	Displays the number of failed "Close" requests.
Clear statistics	• - • Clear	-	Clears the request statistics, setting them back to zero (0). Automatically returns to "-" after the clearing is finished.

Table. 4.6.6 - 491. Object types.

Name	Functionalities	Description
Withdrawable circuit breaker	Breaker cart position Circuit breaker position Circuit breaker control Object ready check before closing breaker Synchrochecking before closing breaker Interlocks	The monitor and control configuration of the withdrawable circuit breaker.
Circuit breaker	Position indication Control Object ready check before closing breaker Synchrochecking before closing breaker Interlocks	The monitor and control configuration of the circuit breaker.
Disconnector (MC)	Position indication Control	The position monitoring and control of the disconnector.
Disconnector (GND)	Position indication	The position indication of the earth switch.

Table. 4.6.6 - 492. I/O.

Signal	Range	Description
Single-pole object Open Status In Phase A (L1)	Digital input or other logical signal selected by the user (SWx)	A link to a physical digital input. The monitored OPEN status of each phase. "1" refers to the active open state of the monitored object. If IEC 61850 is enabled, GOOSE signals can be used for status indication.
Single-pole object Open Status In Phase B (L2)		
Single-pole object Open Status In Phase C (L3)		
Single-pole object Close Status In Phase A (L1)		A link to a physical digital input. The monitored CLOSE status of each phase. "1" refers to the active close state of the monitored object. If IEC 61850 is enabled, GOOSE signals can be used for status indication.
Single-pole object Close Status In Phase B (L2)		
Single-pole object Close Status In Phase C (L3)		
Withdrw.CartIn.Status In		A link to a physical digital input. The monitored withdrawable object's position is IN. "1" means that the withdrawable object cart is in. If IEC 61850 is enabled, GOOSE signals can be used for status indication.
Withdrw.CartOut.Status In		A link to a physical digital input. The monitored withdrawable object's position is OUT. "1" means that the withdrawable object cart is pulled out. If IEC 61850 is enabled, GOOSE signals can be used for status indication.

© Arcteq Relays Ltd

Signal	Range	Description
Single-pole object Ready status In		A link to a physical digital input. Indicates that status of the monitored object. "1" means that the object is ready and the spring is charged for a close command. If IEC 61850 is enabled, GOOSE signals can be used for status indication.
Sync.Check status In		A link to a physical digital input or a synchrocheck function. "1" means that the synchrocheck conditions are met and the object can be closed. If IEC 61850 is enabled, GOOSE signals can be used for status indication.
Single-pole object Open Command Phase A (L1)	OUT1…OUTx	The physical "Open" command pulse to the device's output relay. Each phase has its own open command.
Single-pole object Open Command Phase B (L2)		
Single-pole object Open Command Phase C (L3)		
Single-pole object Close Command Phase	OUT1…OUTx	The physical "Close" command pulse to the device's output relay.

Table. 4.6.6 - 493. Operation settings.

Name	Range	Step	Default	Description
Breaker traverse time	0.02…500.00 s	0.02 s	0.2 s	Determines the maximum time between open and close statuses when the breaker switches. If this set time is exceeded and both open and closed status inputs are active, the status "Bad" is activated in the "Objectx Breaker status" setting. If neither of the status inputs are active after this delay, the status "Intermediate" is activated.
Maximum Close command pulse length	0.02…500.00 s	0.02 s	0.2 s	Determines the maximum length for a Close pulse from the output relay to the controlled object. If the object operates faster than this set time, the control pulse is reset and a status change is detected.
Maximum Open command pulse length	0.02…500.00 s	0.02 s	0.2 s	Determines the maximum length for a Open pulse from the output relay to the controlled object. If the object operates faster than this set time, the control pulse is reset and a status change is detected.
Control termination timeout	0.02…500.00 s	0.02 s	10 s	Determines the control pulse termination timeout. If the object has not changed it status in this given time the function will issue error event and the control is ended. This parameter is common for both open and close commands.
Final trip pulse length	0.00…500.00 s	0.02 s	0.2 s	Determines the length of the final trip pulse length. When the object has executed the final trip, this signal activates. If set to 0 s, the signal is continuous. If auto-recloser function controls the object, "final trip" signal is activated only when there are no automatic reclosings expected after opening the breaker.

Table. 4.6.6 - 494. Control settings (DI and Application).

Signal	Range	Description
Access level for MIMIC control	• User • Operator • Configurator • Super user	Defines what level of access is required for MIMIC control. The default is the "Configurator" level.
Single-pole object LOCAL Close control input	Digital input or other logical signal selected by the user	The local Close command from a physical digital input (e.g. a push button).
Single-pole object LOCAL Open control input		The local Open command from a physical digital input (e.g. a push button).
Single-pole object REMOTE Close control input		The remote Close command from a physical digital input (e.g. RTU).
Single-pole object REMOTE Open control input		The remote Open command from a physical digital input (e.g. RTU).
Objectx Application Close		The Close command from the application. Can be any logical signal.
Single-pole object Application Open ABC (L1,L2,L3)		The Open command from the application for all phases. Can be any logical signal.
Single-pole object Application Open A (L1)		The Open command from the application for phase A (L1). Can be any logical signal.
Single-pole object Application Open B (L2)		The Open command from the application for phase B (L2). Can be any logical signal.
Single-pole object Application Open ABC (L3)		The Open command from the application for phase C (L3). Can be any logical signal.

Blocking and interlocking

The interlocking and blocking conditions can be set for each controllable object, with Open and Close set separately. Blocking and interlocking can be based on any of the following: other object statuses, a software function or a digital input.

In order for the blocking signal to be received on time, it has to reach the function 5 ms before the control command.

Events and registers

The object control and monitoring function (abbreviated "OBJS" in event block names) generates events and registers from the status changes in the events listed below. The user can select which event messages are stored in the main event buffer: ON, OFF, or both.

The events triggered by the function are recorded with a time stamp.

© Arcteq Relays Ltd

Table. 4.6.6 - 495. Event messages of the OBJS function.

Event block name	Event names
OBJS1	Object A(L1) Intermediate
OBJS1	Object A(L1) Open
OBJS1	Object A(L1) Close
OBJS1	Object A(L1) Bad
OBJS1	Object B(L2) Open
OBJS1	Object B(L2) Close
OBJS1	Object B(L2) Bad
OBJS1	Object B(L2) Intermediate
OBJS1	Object C(L3) Open
OBJS1	Object C(L3) Close
OBJS1	Object C(L3) Bad
OBJS1	Object C(L3) Intermediate
OBJS1	WD Cart Intermediate
OBJS1	WD Cart Open
OBJS1	WD Cart Close
OBJS1	WD Cart Bad
OBJS1	Object A(L1) Open Command ON/OFF
OBJS1	Object B(L2) Open Command ON/OFF
OBJS1	Object C(L3) Open Command ON/OFF
OBJS1	Close Command ON/OFF
OBJS1	Open Commands Blocked
OBJS1	Open Commands Allowed
OBJS1	Close Commands Blocked
OBJS1	Close Commands Allowed
OBJS1	Object Is Ready
OBJS1	Object Not Ready, Wait for Ready
OBJS1	Sync Is Ok
OBJS1	Sync Not Ok Wait for sync
OBJS1	Final Trip ON/OFF
OBJS1	Open Command Fail ON/OFF

© Arcteq Relays Ltd

Event block name	Event names
OBJS1	Close Command Fail ON/OFF
OBJS1	L1 Open Command Timeout On
OBJS1	L1 Open Command Timeout On
OBJS1	L2 Open Command Timeout On
OBJS1	L2 Open Command Timeout On
OBJS1	L3 Open Command Timeout On
OBJS1	L3 Open Command Timeout On
OBJS1	Close Command Timeout On
OBJS1	Close Command Timeout On

The function registers its operation into the last twelve (12) time-stamped registers. The table below presents the structure of the function's register content.

Table. 4.6.6 - 496. Register content.

Name	Description
Date and time	dd.mm.yyyy hh:mm:ss.mss
Event	Event name
L1 breaker status	The status of phase L1 (A).
L2 breaker status	The status of phase L2 (B).
L3 breaker status	The status of phase L3 (C).
WD status	The status of the withdrawable circuit breaker.

4.6.7 Indicator object monitoring

The indicator object monitoring function takes care of the status monitoring of disconnectors. The function's sole purpose is indication and does not therefore have any control functionality. To control circuit breakers and/or disconnectors, please use the Object control and monitoring function. The monitoring is based on the statuses of the configured device's digital inputs. The number of monitored indicators in a device depends on the device type and available inputs. The status monitoring of one monitored object usually requires two (2) digital inputs. Alternatively, object status monitoring can be performed with a single digital input: the input's active state and its zero state (switched to 1 with a NOT gate in the Logic editor).

The outputs of the function are the monitored indicator statuses (Open, Close, Intermediate and Bad). The setting parameters are static inputs for the function, which can only be changed by the use in the function's setup phase.

The inputs of the function are the binary status indications. The function generates general time stamped ON/OFF events to the common event buffer from each of the following signals: OPEN, CLOSE, BAD and INTERMEDIATE event signals. The time stamp resolution is 1 ms.

© Arcteq Relays Ltd
IM00099

Settings

Function uses available hardware and software digital signal statuses. These input signals are also setting parameters for the function.

Table. 4.6.7 - 497. Indicator status.

Name	Range	Default	Description
Indicator name ("Ind. Name")	-	IndX	The user-set name of the object, at maximum 32 characters long.
IndicatorX Object status ("Ind.X Object Status")	• Intermediate • Open • Closed • Bad	-	Displays the status of the indicator object. Intermediate status is displayed when neither of the status conditions (open or close) are active. Bad status is displayed when both of the status conditions (open and close) are active.

Table. 4.6.7 - 498. Indicator I/O.

Signal	Range	Description
IndicatorX Open input ("Ind.X Open Status In")	Digital input or other logical signal selected by the user (SWx)	A link to a physical digital input. The monitored indicator's OPEN status. "1" refers to the active "Open" state of the monitored indicator.
IndicatorX Close input ("Ind.X Close Status In")	Digital input or other logical signal selected by the user (SWx)	A link to a physical digital input. The monitored indicator's CLOSE status. "1" refers to the active "Close" state of the monitored indicator.

Events

The indicator object monitoring function (abbreviated "CIN" in event block names) generates events from the status changes in the events listed below. The user can select which event messages are stored in the main event buffer: ON, OFF, or both. The events triggered by the function are recorded with a time stamp.

Table. 4.6.7 - 499. Event messages (instances 1 – 5).

Event block name	Event names
CIN1...5	Intermediate
CIN1...5	Open
CIN1...5	Close
CIN1...5	Bad

Table. 4.6.7 - 500. Event messages (instances 1-10).

Event block name	Event names
CIN1...10	Intermediate
CIN1...10	Open
CIN1...10	Close
CIN1...10	Bad

Table. 4.6.7 - 501. Event messages (instances 1-20).

Event block name	Event names
CIN1...20	Intermediate
CIN1...20	Open
CIN1...20	Close
CIN1...20	Bad

4.6.8 Auto-recloser (79)

Auto-reclosing means a coordinated de-energization and re-energization of overhead lines (both transmission and distribution). Its purpose is to clear transient and semi-permanent fault causes from the line and automatically restore the supply to the line. These types of faults account for approximately 80...95 % of all faults found in transmission and distribution networks. The majority of these fault types can be cleared with high-speed auto-reclosing, while the rest can be cleared with delayed auto-reclosing by de-energizing the faulty line for a longer period of time.

Only a minority of overhead line faults are of the permanent type which require maintenance or repair in the actual fault location. This type of fault include lightning striking the line, a tree branch touching the line, an arc caused by animals, and a short-circuit caused by some other object touching the line. If the fault is permanent (e.g. a broken insulator or a fallen tree leaning on the overhead line), the auto-recloser cannot clear the fault and the faulty feeder is locked and prevented from closing until the cause of the fault is repaired in the actual fault location. Also, when a fault cannot be cleared by auto-reclosing the line, any close-distance short-circuits should avoid initiating the auto-recloser because that would only cause unnecessary stress for the lines and the circuit breakers. Similar situations also rise in mixed networks since cable network faults cannot be cleared with the auto-recloser. The function must therefore be aware of the fault location before applying the auto-recloser to the faulty line.

Auto-recloser as application

The main principle of the auto-recloser is to de-energize the faulty line and the fault location so the cause of the fault can drop out from the line. When the line is energized and an object either touches the line or drops onto the line, the current starts to flow through the object either to the ground or between the phases. This causes the surrounding air to heat and ionize, and it starts to operate as a conductor between the energized phase(s) and the ground causing an arc to ignite.

© Arcteq Relays Ltd

When the breaker is opened (either by an auto-recloser command or by a protection function), the voltage in the line goes to zero. This extinguishes the arc and lets the fault-causing object to drop from the line, thus clearing the cause of the fault. Auto-reclosing closes the breaker after a set time (called 'dead time' during which the line is not energized) and the supply is restored to the line. If the fault is not cleared by the first auto-recloser cycle (called 'shot'), more shots can be applied to the line. Alternatively, the function can be set to initiate the final trip, locking the feeder closing. The decision between a single-shot and a multi-shot auto-recloser depends on the following: protection type, switchgear, circuit breaker, stability requirements, network type, consumer loads as well as local utility knowledge and network practices.

The user can select whether there is a set time delay (called 'arcing time') between shots to burn the fault-causing object from the line, or whether normal protection operating times are applied. When a fault is not present when the breaker is closed but reappears soons after (called 'discrimination time' and 'reclaim time'), the auto-recloser function can either arm another shot or give the final trip command and the feeder becomes locked. The user can select the preferred method in the function's settings.

It is difficult to define a typical auto-recloser scheme because the above-mentioned parameters (and thus the main parameters of a scheme) vary greatly in distribution and transmission networks. This is why there are no universally applicable answers from the number of shots and the duration of the dead times to which protection functions should trigger the auto-recloser.

The minimum times for the "Dead time" setting is mostly dependent on the voltage level of the protected network: the air needs enough time to de-ionize before the circuit breaker is opened. For medium-voltage networks (20...75 kV) a 200 ms dead time should be sufficient. High-voltage networks require a longer dead time: a 110 kV network needs 300 ms and a 400 kV network needs 400...500 ms. This minimum time is not, however, less straightforward than this as it is affected by other parameters as well (such as conductor spacing, wind speed, fault type, fault duration, etc.). The main purpose of the "Dead time" setting is to give enough time for the air surrounding the fault location to return to its isolating state before the line is re-energized and therefore prevent the arc from reignite due to the heated and ionized air. The circuit breaker's open-close-open cycle capacity is another restricting factor for the minimum "Dead time" setting in low-voltage networks. In high-voltage networks, the time de-ionizing requires puts additional limitations on the minimum "Dead time" setting.

The user can build different schemes for evolving faults (such as transient earth faults that become multi-phase short-circuits or overcurrent faults) by changing the priorities and behaviors requests have. The auto-recloser function has five (5) independent priority requests for reclosing: REQ1 has the highest priority and REQ5 the lowest. The function also has one (1) critical request which halts the reclosing in any position when the request is received.

Auto-recloser scheme in radial networks

A typical medium-voltage overhead network is usually radial in structure. This does not cause any additional requirements for the auto-recloser scheme apart from the above-mentioned limitations from the required air de-ionization time and the capacity of the circuit breaker. Also, a typical medium-voltage overhead line consists only of consumers and has no power generation; thus, the main objective of the structure is to provide a stable and continuous supply of electricity.

Figure. 4.6.8 - 228. Diagram of a typical radial medium-voltage network in rural areas.

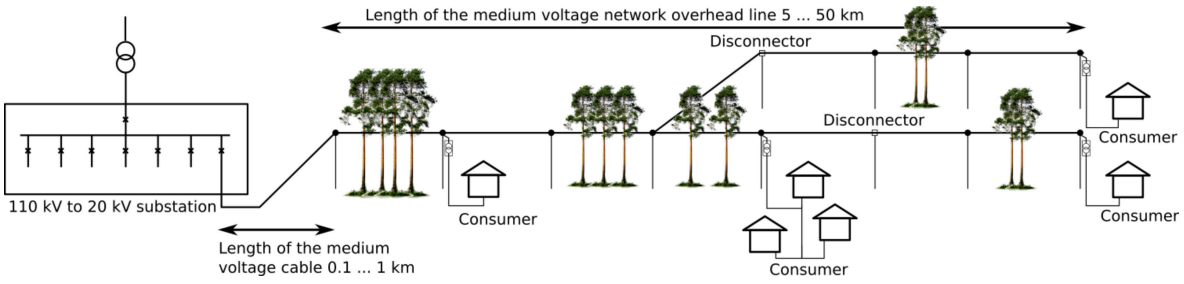

Usually, a radially built medium-voltage network in rural areas consists of a short cable connection from the substation to the overhead line, followed by a relatively long overhead line that normally ends with the consumer. The consumer (residence, farm, etc.) can connect to basically any point in the overhead line with a 20 kV/0.4 kV distribution transformer. The overhead line can have many branches, and it is not uncommon (especially in rural areas) that there are multiple forest areas the line runs through between the consumer connections. In longer lines in sparsely populated areas it is possible to isolate areas of the overhead line by dividing it up with disconnectors (at least in branches).

This type of application normally uses an auto-recloser with two shots (one high-speed and one delayed) which are triggered by earth fault protection or overcurrent protection. Short-circuit protection is used for interlocking the auto-recloser in case a clear short-circuit fault occurs in the line.

Figure. 4.6.8 - 229. Example of assigning request signals.

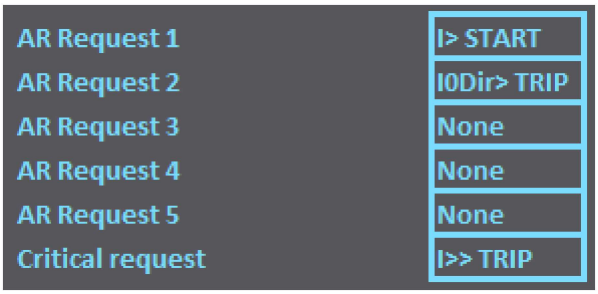

Figure. 4.6.8 - 230. Example of shot settings (two requests and two initialized shots).

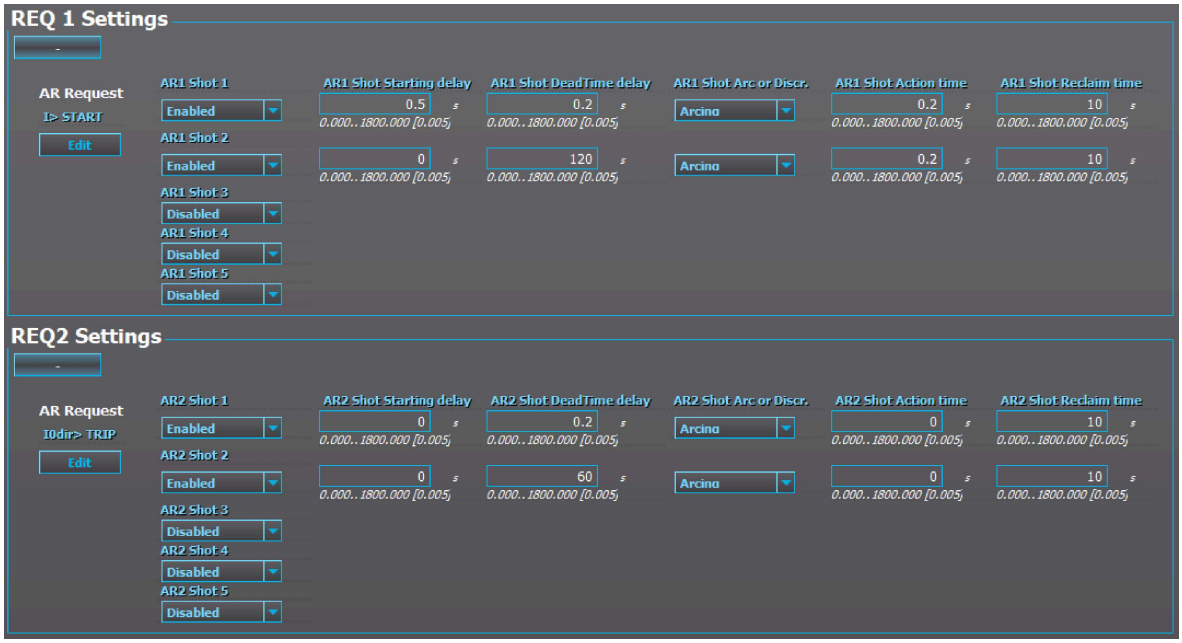

In this example, earth fault (REQ2) uses its own operating time settings, whereas the time delay for overcurrent (REQ1) comes from the auto-recloser's own settings. Both fault types can initialize both of the shots with different settings. If the fault evolves from earth fault into a multi-phase fault, the auto-recloser uses the AR1 settings for the reclosing. In this example, the dead time between the first and the second shot in REQ1 differs from the dead time in REQ2 because the air needs more time to cool and de-ionize after an overcurrent or a multi-phase fault than it does after an earth fault. If the high-set overcurrent stage activates in any situation, the auto-reclosing sequence is stopped, the final trip is issued and the feeder closing is locked by the auto-recloser. A manual reset of the auto-recloser's lock is required before one can attempt to close the breaker. A manual reset can be applied from SCADA or locally from the device's HMI.

© Arcteq Relays Ltd

Based on the example above, the following six (6) sections present the principle signaling of the auto-recloser function. These are the auto-recloser sequence variations that can occur with this setup:

- from Trip with two shots (both fail)
- from Trip with two shots (high-speed fails, time-delayed succeeds)
- from Trip with two shots (high-speed succeeds)
- from Start with two shots (both fail)
- from Start with two shots (high-speed fails, time-delayed succeeds)
- from Start with two shots (high-speed succeeds).

The signal status graphs describe the statuses of available requests, the statuses of the auto-recloser's internal signals, the statuses of the timers, the breaker controls from the auto-recloser function as well as the breaker status signals.

The auto-recloser function operates closely with the object control and monitoring function, and all breaker status and monitor signals are forwarded from the selected object to the auto-recloser function. The circuit breaker's "Open" and "Close" signals are also controlled through the dedicated object. When the breaker cannot be closed (because it is not ready or the closing is waiting for a Synchrocheck allowance), the wait state is forwarded to the auto-recloser function to wait for the object's acknowledgement either of a successful closing or of a failure time-out. A similar situation can arise in the circuit breaker's "Open" command, for example, if the command is blocked because of an SF_6 gas leakage. In failure acknowledgement situations the auto-recloser function is always put to a lock-out state with a requirement for resetting once the cause of the lock-out is cleared. Resetting is done by an external input to the function or by closing the breaker.

Auto-recloser sequence from Trip with two shots (both fail).

In this auto-recloser scheme, the TRIP signal from the directional eath fault protection function (I0dir> TRIP) was set up as the operation starter for Request 2 (REQ2). REQ2 has two shots (Shots 1 and 2) enabled with the setting detailed in the image below; the first one is a high-speed shot (0.2 s) that is then followed by a time-delayed shot (60 s).

Figure. 4.6.8 - 231. Settings for I0dir> with two shots.

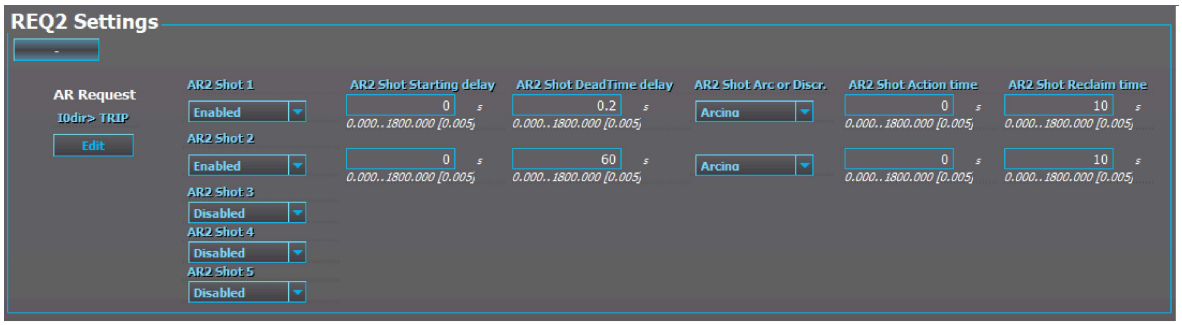

When the TRIP signal is used to initiate the auto-recloser sequence, no additional starting or discrimination times are needed as the protection stage's own operation takes care of the breaker opening timings directly. Therefore, the auto-recloser function only monitors the status of the directional earth fault stage's tripping before initiating requests and shots.

Figure. 4.6.8 - 232. Signal status graph of the permanent earth fault auto-recloser cycle.

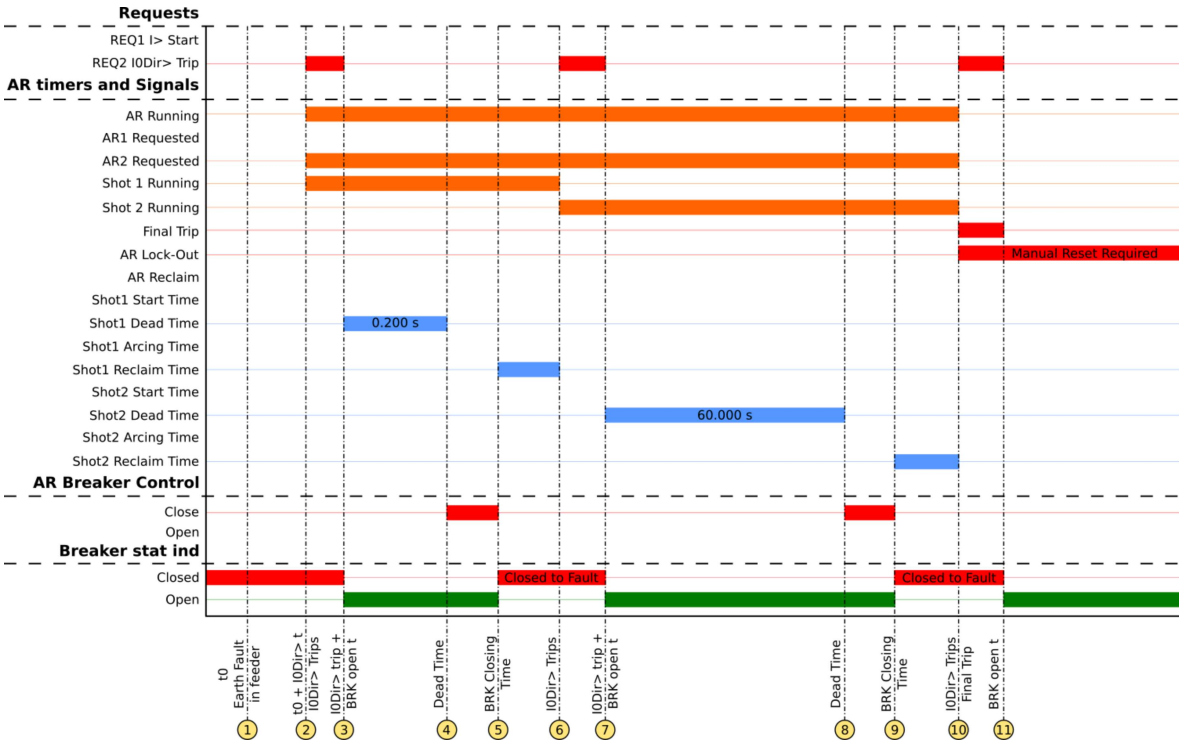

1. An earth fault is found in the protected line causing the I0Dir> protection to start calculating the operating time for a trip.
2. The I0Dir> trips and gives the "Open" command to the breaker's open coil. The auto-recloser function is initiated and the AR Running, AR2 Requested and Shot 1 Running signals are activated.
3. The circuit breaker is opened and the I0Dir> TRIP signal is released and simultaneously the REQ2 trip signal for the auto-recloser is released. The recloser starts calculating the Shot1 Dead Time to close the breaker.
4. The Shot1 Dead Time (200 ms) is exceeded and the function sends a "Close" request to the object breaker (AR Breaker): the conditions are met and the breaker's "Close" command is sent to the breaker's close coil.
5. The circuit breaker is closed towards the fault as it was not cleared by Shot 1 given the non-energized time. The I0dir> stage picks up and starts calculating the operating time for a trip. A "Close" command is dropped after the breaker's "Closed" indication is received and the auto-recloser function starts calculating Shot1 Reclaim Time.
6. The I0Dir> stage trips a second time and gives the REQ2 request to the function. However, as the function is in the process of calculating the Shot1 Reclaim Time when it receives this request, the function moves on to the next available shot (Shot 2) for the request. The Shot2 Running signal is set to active and the Shot1 Running is terminated.
7. The circuit breaker is opened and the I0Dir> TRIP signal is released and simultaneously REQ2 trip signal for auto-recloser is released. The recloser starts calculating the Shot2 Dead Time to close the breaker.
8. The Shot2 Dead Time (60 s) is exceeded and the function sends a "Close" request to the object breaker: the conditions are met and the breaker's "Close" command is sent to the breaker's close coil.
9. The circuit breaker is closed towards the fault since it was not cleared by Shot 2. The I0dir> stage picks up and starts calculating the operating time for a trip. A "Close" command is dropped after the breaker's "Closed" indication is received and the auto-recloser function starts calculating Shot2 Reclaim Time.

© Arcteq Relays Ltd
IM00099

10. The I0Dir> stage trips a third time and gives the REQ2 request to the function. However, as the function is in the process of calculating the Shot2 Reclaim Time when it receives this request, the function tries to move on to the next available shot. Alas, this scheme does not have any more available shots and so the function begins the Final Trip state and drops the AR Running, Shot2 Running and AR2 Requested signals. The function enters the AR Lock-out state to prevent any further requests for reclosing.
11. The circuit breaker is opened and the I0Dir> TRIP signal is released, and simultaneously the REQ2 trip signal for the auto-recloser is released. The function is now in a steady lock-out state and waits for the user to manually reset and re-initialize the function by closing the breaker.

Auto-recloser sequence from Trip with two shots (high-speed fails, time-delayed succeeds).

This auto-recloser scheme has the same starters and shots as the previous example. The setting and signals are also the same. However, in this example the fault persists the high-speed shot but is cleared by the time-delayed shot.

Figure. 4.6.8 - 233. Settings for I0dir> with two shots.

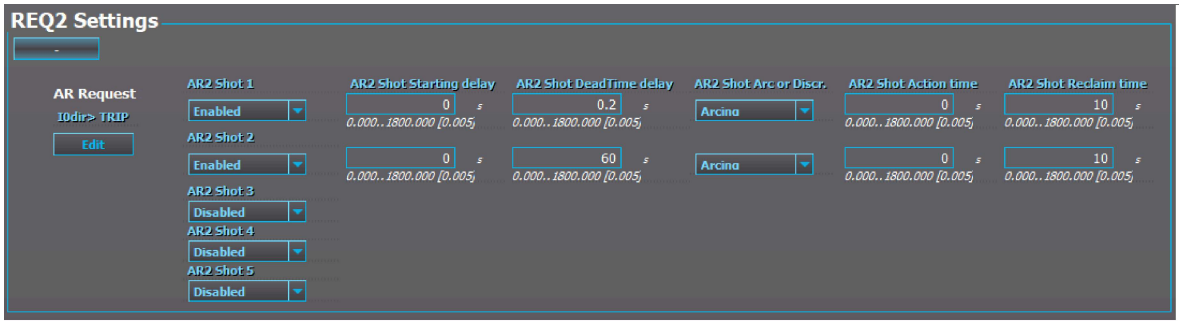

This type of sequence (i.e. two shots required to clear the fault) represents 10...15 % of all faults that occur in MV overhead line networks.

Figure. 4.6.8 - 234. Signal status graph of the semi-permanent earth fault auto-recloser cycle.

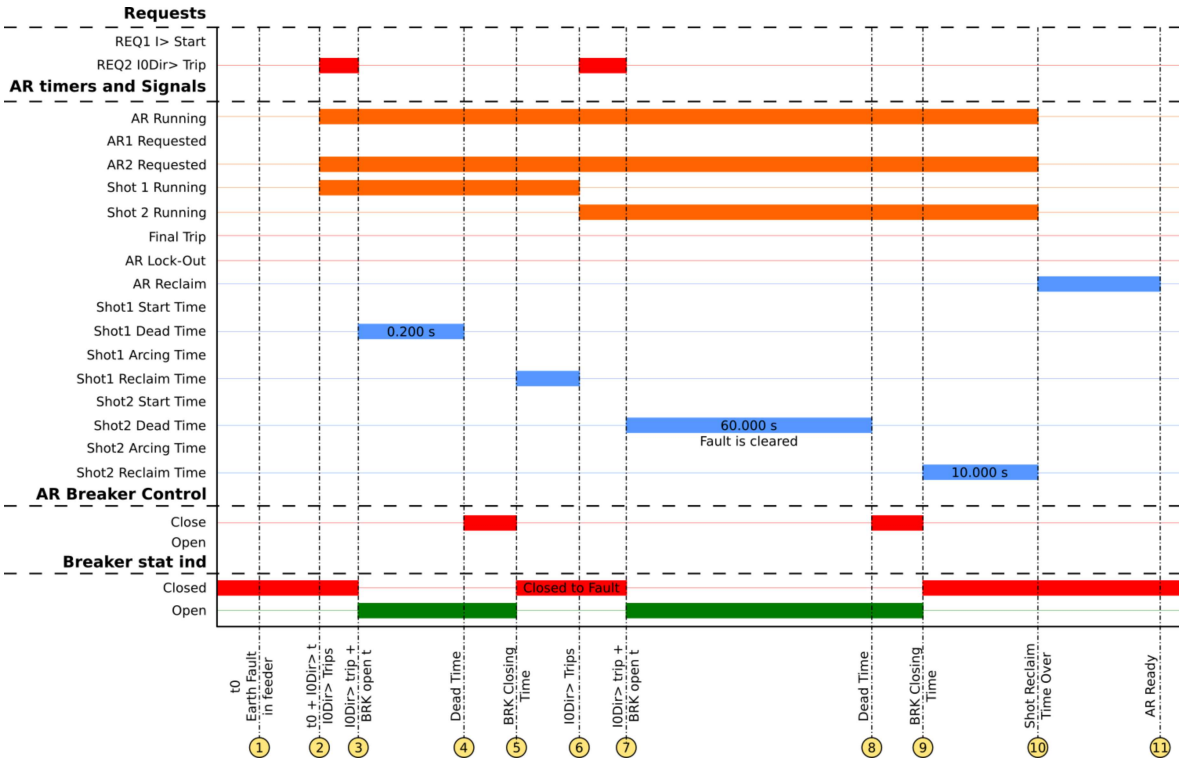

1. An earth fault is found in the protected line causing the I0Dir> protection to start calculating the operating time for a trip.
2. The I0Dir> trips and gives the "Open" command to the breaker's open coil. The auto-recloser function is initiated and the AR Running, AR2 Requested and Shot 1 Running signals are activated.
3. The circuit breaker is opened and the I0Dir> TRIP signal is released and simultaneously the REQ2 trip signal for the auto-recloser is released. The recloser starts calculating the Shot1 Dead Time to close the breaker.
4. The Shot1 Dead Time (200 ms) is exceeded and the function sends a "Close" request to the object breaker: the conditions are met and the breaker's "Close" command is sent to the breaker's close coil.
5. The circuit breaker is closed towards the fault as it was not cleared by Shot 1. The I0dir> stage picks up and starts calculating the operating time for a trip. A "Close" command is dropped after the breaker's "Closed" indication is received and the auto-recloser function starts calculating Shot1 Reclaim Time.
6. The I0Dir> stage trips a second time and gives the REQ2 request to the function. However, as the function is in the process of calculating the Shot1 Reclaim Time when it receives this request, the function moves on to the next available shot (Shot 2) for the request. The Shot2 Running signal is set to active and the Shot1 Running is terminated.
7. The circuit breaker is opened and the I0Dir> TRIP signal is released and simultaneously REQ2 trip signal for the auto-recloser is released. The recloser starts calculating the Shot2 Dead Time to close the breaker.
8. The fault is cleared during Shot2 Dead Time. After that time (60 s) is exceeded, the function sends a "Close" request to the object breaker: the conditions are met and the breaker's "Close" command is sent to the breaker's close coil.
9. The circuit breaker is closed and since the fault has been cleared, no pick-ups are detected. The "Close" command is dropped after the breaker's "Closed" indication is received and the auto-recloser function starts calculating Shot2 Reclaim Time.

© Arcteq Relays Ltd

10. The Shot2 Reclaim Time (10 s) is exceeded, and so the AR Running, Shot 2 Running and AR2 Requested signals are terminated, and the AR Reclaim calculation begins. The difference between auto-reclosing and shot-specific reclaim times is that the function jumps to the next available shot should the fault return. If a fault returns after a successful cycle and the function's AR Reclaim signal is active, the function jumps directly to the Final Trip state and then enters the lock-out state. The user can control this behavior through the function settings. Both reclaim times can be set to 0 s when they are not needed, and the function skips all timers that are set to zero.
11. The AR Reclaim time is exceeded and the function is set to "Ready" to wait for the next request.

Auto-recloser sequence from Trip with two shots (high-speed succeeds).

This auto-recloser scheme has the same starters and shots as the two previous examples. The setting and signals are also the same. However, in this example the fault is cleared by the high-speed shot.

Figure. 4.6.8 - 235. Settings for I0dir> with two shots.



This type of sequence (i.e. the first shot clears the fault) represents 75...85 % of all faults that occur in MV overhead line networks.

Figure. 4.6.8 - 236. Signal status graph of the transient earth fault auto-recloser cycle.

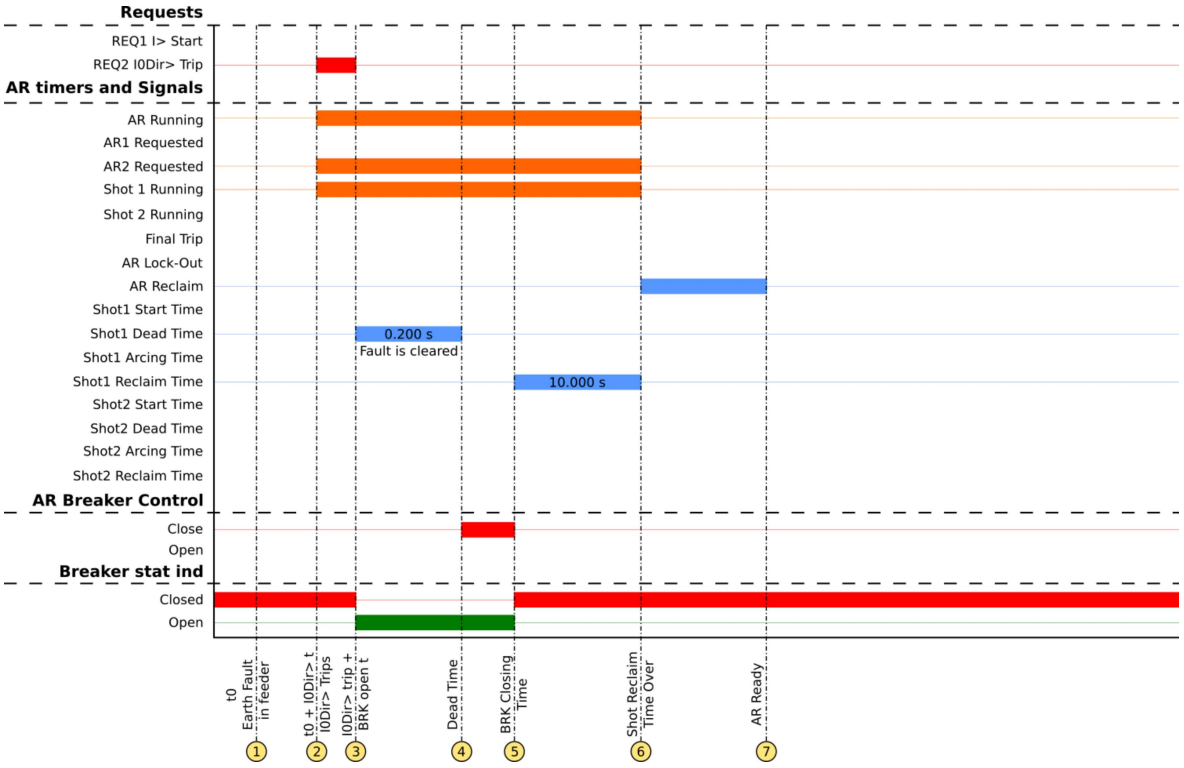

1. An earth fault is found in the protected line causing the I0Dir> protection to start calculating the operating time for a trip.
2. The I0Dir> trips and gives the "Open" command to the breaker's open coil. The auto-recloser function is initiated and the AR Running, AR2 Requested and Shot 1 Running signals are activated.
3. The circuit breaker is opened and the I0Dir> TRIP signal is released and simultaneously the REQ2 trip signal for the auto-recloser is released. The recloser starts calculating the Shot1 Dead Time to close the breaker.
4. The fault is cleared during Shot1 Dead Time calculation. When that time (200 ms) is exceeded and the function sends a "Close" request to the object breaker: the conditions are met and the breaker's "Close" command is sent to the breaker's close coil.
5. The circuit breaker is closed and since the fault was cleared, no pick-ups are detected. The "Close" command is dropped after the breaker's "Closed" indication is received and the auto-recloser function starts calculating Shot1 Reclaim Time.
6. The Shot1 Reclaim Time (10 s) is exceeded, and so the AR Running, Shot 2 Running and AR2 Requested signals are terminated, and the AR Reclaim calculation begins. The difference between auto-reclosing and shot-specific reclaim times is that the function jumps to the next available shot should the fault returns. If a fault returns after a successful cycle and the function's AR Reclaim signal is active, the function jumps directly to the Final Trip state and then enters the lock-out state. The user can control this behavior through the function settings. Both reclaim times can be set to 0 s when they are not needed, and the function skips all timers that are set to zero. The user can also set is so that AR Reclaim is not used at all after a successful reclosing cycle.
7. The AR Reclaim time is exceeded and the function is set to "Ready" to wait for the next request.

Auto-recloser sequence from Start with two shots (both fail).

In this auto-recloser scheme, the START signal from the non-directional overcurrent protection function (I> START) was set up as the operation starter for Request 1 (REQ1). REQ1 has two shots (Shots 1 and 2) enabled with the setting detailed in the image below; the first one is a high-speed shot (0.2 s) that is then followed by a time-delayed shot (120 s). In this scheme the starting delay time is longer that in REQ2's high-speed shot. The shot action time is also longer in REQ1. If the fault persists after both shots, the time determining how long the breaker stays closed is reduced.

Figure. 4.6.8 - 237. Settings for I> with two shots.

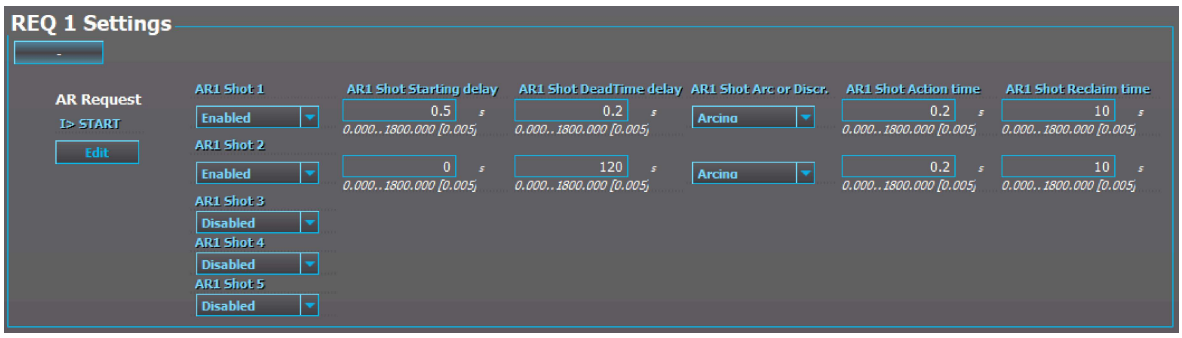

When the START signal is used to initiate the auto-recloser sequence, the fault duration timings are overseen by the auto-recloser function and thus both the starting time and the arcing time need to be set accordingly. The protection's main operating time settings should be longer than the values set to the auto-recloser function; this way the state changes work properly with this function.

© Arcteq Relays Ltd

Figure. 4.6.8 - 238. Signal status graph of the permanent overcurrent auto-recloser cycle.

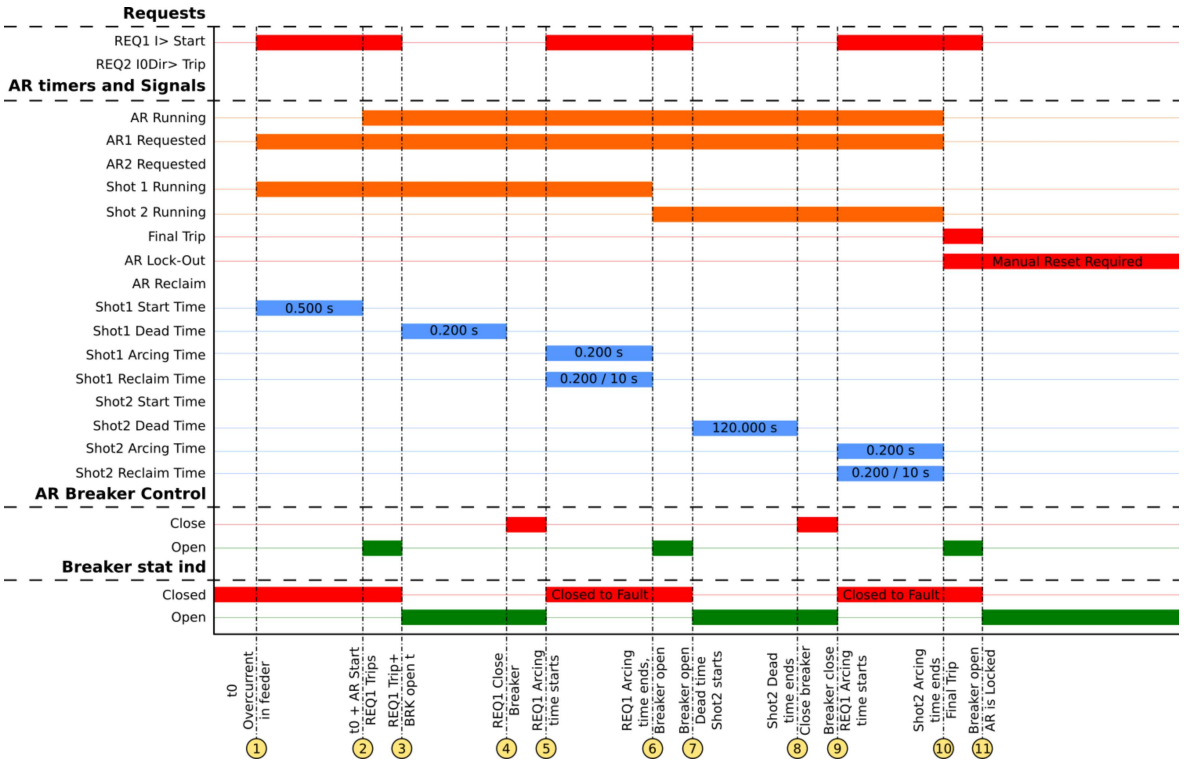

1. An overcurrent is found in the protected line causing the I> protection to pick up. This activates the AR1 Requested signal to begin to calculate the Shot1 Start Time. This activates the Shot 1 Running signal even though the auto-recloser function is not yet running.
2. The Shot1 Start Time (500 ms) for has elapsed and the auto-recloser function starts running (AR Running). This sends an "Open" command to the breaker.
3. The circuit breaker is opened and the I> stage's START signal is released and simultaneously REQ1 trip signal for auto-reclosing is released. The auto-recloser function starts calculating the Shot1 Dead Time to close the breaker.
4. The Shot1 Dead Time (200 ms) is exceeded and the auto-recloser function sends a "Close" request to the object breaker: the conditions are met and the breaker's "Close" command is sent to the breaker's close coil.
5. The circuit breaker is closed and since fault was not cleared, a new pick-up of I> is detected. A "Close" command is dropped after the breaker's "Closed" indication is received and the auto-recloser function starts calculating the Shot1 Reclaim Time simultaneously with the Shot1 Arcing Time.
6. The Shot1 Arcing Time (200 ms) is exceeded which means that the fault is not cleared and the function sends an "Open" command to the breaker. The function deactivates the Shot1 Running signal and instead activates the Shot2 Running signal.
7. The circuit breaker opens and the Shot2 Dead Time calculation begins.
8. The Shot2 Dead Time (120 s) is exceeded and the auto-recloser function sends a "Close" command to the breaker.
9. The circuit breaker is closed towards the fault since it was not cleared by Shot 2. The I> stage picks up and starts calculating the Shot2 Arcing Time for the Final Trip. The "Close" command is dropped after the the breaker's "Closed" indication is received. The auto-recloser function also starts calculating the Shot2 Reclaim Time.
10. The Shot2 Arcing Time (200 ms) is exceeded and and the REQ1 request is given to the function. However, as the function is in the process of calculating the Shot2 Reclaim Time when it receives this request, the function tries to move on to the next available shot. Alas, this scheme does not have any more available shots and so the function begins the Final Trip state and drops the AR Running, Shot2 Running and AR1 Requested signals. The function enters the AR Lock-out state to prevent any further requests for reclosing.

11. The circuit breaker is opened and the I> function's START signal is released, and simultaneously the REQ1 trip signal for auto-reclosing is released. The function is now in a steady lock-out state and waits for the user to manually reset and re-initialize the function by closing the breaker.

Auto-recloser sequence from Start with two shots (high-speed fails, time-delayed succeeds).

This auto-recloser scheme has the same starters and shots as the previous example. The setting and signals are also the same. However, in this example the fault persists the high-speed shot but is cleared by the time-delayed shot.

Figure. 4.6.8 - 239. Settings for I> with two shots.

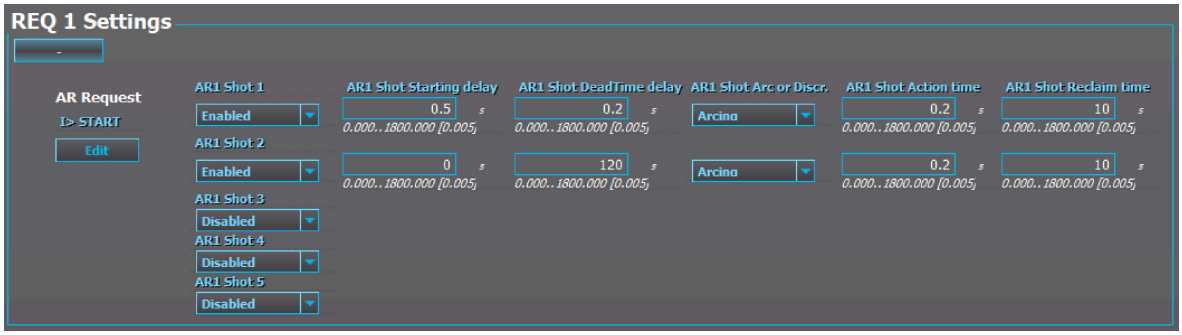

This type of sequence (i.e. two shots required to clear the fault) represents 10...15 % of all faults that occur in MV overhead line networks.

Figure. 4.6.8 - 240. Signal status graph of the semi-permanent overcurrent auto-recloser cycle.

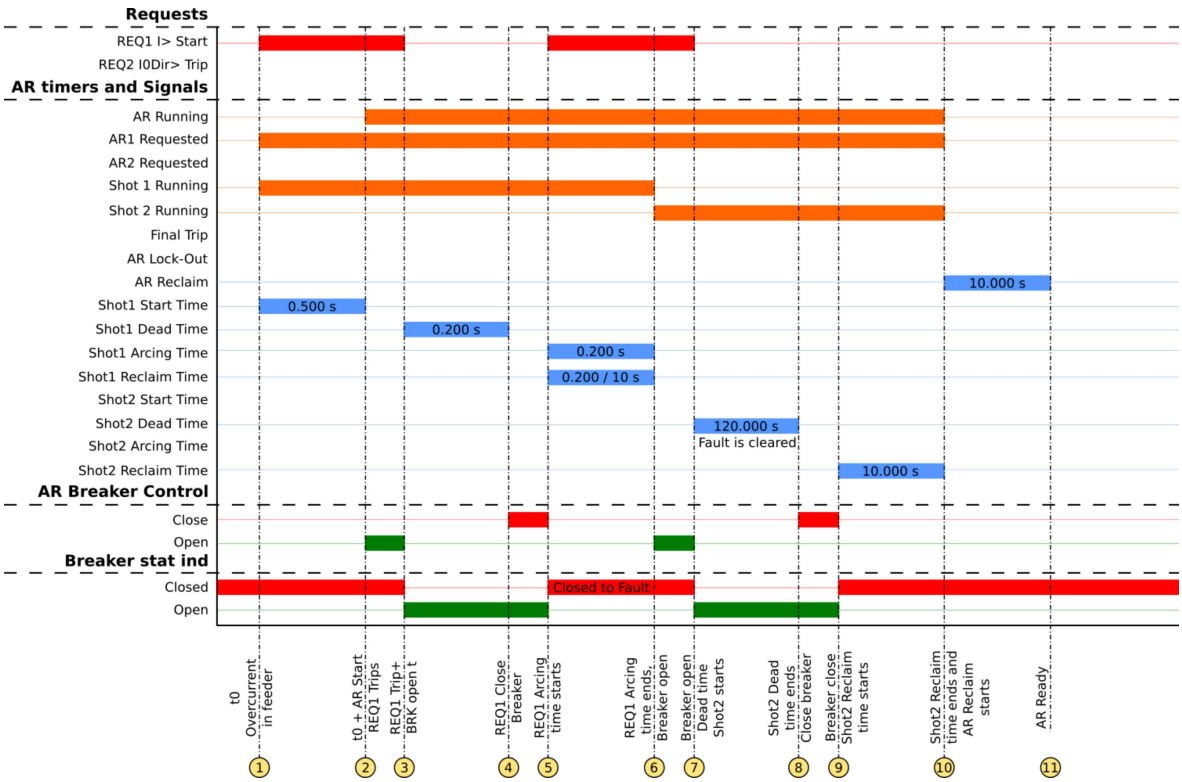

1. An overcurrent is found in the protected line causing the I> protection to pick up. This activates the AR1 Requested signal to begin to calculate the Shot1 Start Time. This activates the Shot 1 Running signal eventhough the auto-recloser function is not yet running.

© Arcteq Relays Ltd

2. The Shot1 Start Time (500 ms) for has elapsed and the auto-recloser function starts running (AR Running). This sends an "Open" command to the breaker.
3. The circuit breaker is opened and the I> stage's START signal is released and simultaneously REQ1 trip signal for auto-reclosing is released. The auto-recloser function starts calculating the Shot1 Dead Time to close the breaker.
4. The Shot1 Dead Time (200 ms) is exceeded and the auto-recloser function sends a "Close" request to the object breaker: the conditions are met and the breaker's "Close" command is sent to the breaker's close coil.
5. The circuit breaker is closed and since fault was not cleared, a new pick-up of I> is detected. A "Close" command is dropped after the breaker's "Closed" indication is received and the auto-recloser function starts calculating the Shot1 Reclaim Time simultaneously with the Shot1 Arcing Time.
6. The Shot1 Arcing Time (200 ms) is exceeded which means that the fault is not cleared and the function sends an "Open" command to the breaker. The function deactivates the Shot1 Running signal and instead activates the Shot2 Running signal.
7. The circuit breaker opens and the Shot2 Dead Time calculation begins.
8. The fault is cleared during the Shot2 Dead Time (120 s). When that time is exceeded, the auto-recloser function sends a "Close" command to the breaker.
9. The circuit breaker is closed and since the fault was cleared by Shot 2, no more pick-ups are detected. The "Close" command is dropped after the the breaker's "Closed" indication is received. The auto-recloser function also starts calculating the Shot2 Reclaim Time.
10. The Shot2 Reclaim Time (10 s) is exceeded, and so the AR Running, Shot2 Running and AR1 Requested signals are terminated and the AR Reclaim calculation begins. The difference between auto-reclosing and shot-specific reclaim times is that the function jumps to the next available shot should the fault returns. If a fault returns after a successful cycle and the function's AR Reclaim signal is active, the function jumps directly to the Final Trip state and then enters the lock-out state. The user can control this behavior through the function settings. Both reclaim times can be set to 0 s when they are not needed, and the function skips all timers that are set to zero. The user can also set is so that AR Reclaim is not used at all after a successful recloser cycle.
11. The AR Reclaim time is exceeded and the function is set to "Ready" to wait for the next request.

Auto-recloser sequence from Start with two shots (high-speed succeeds).

This auto-recloser scheme has the same starters and shots as the two previous examples. The setting and signals are also the same. However, in this example the fault is cleared by the high-speed shot.

Figure. 4.6.8 - 241. Settings for I> with two shots.

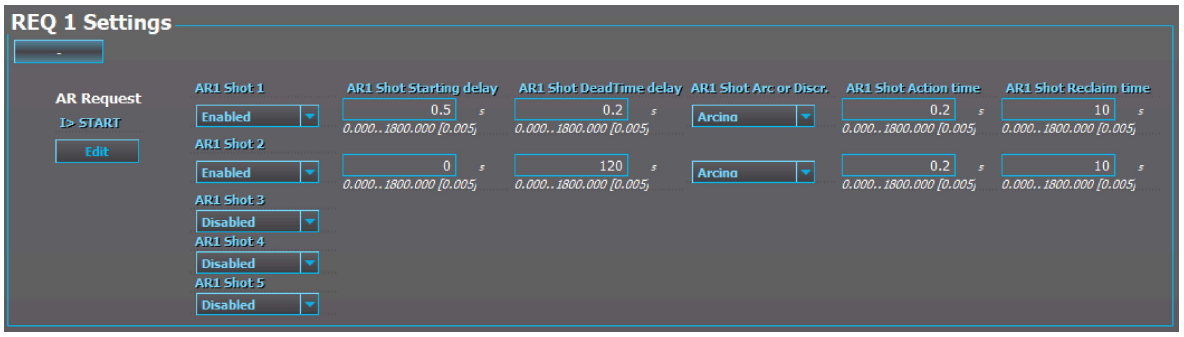

This type of sequence (i.e. the first shot clears the fault) represents 75...85 % of all faults that occur in MV overhead line networks.

Figure. 4.6.8 - 242. Signal status graph of the transient overcurrent auto-recloser cycle.

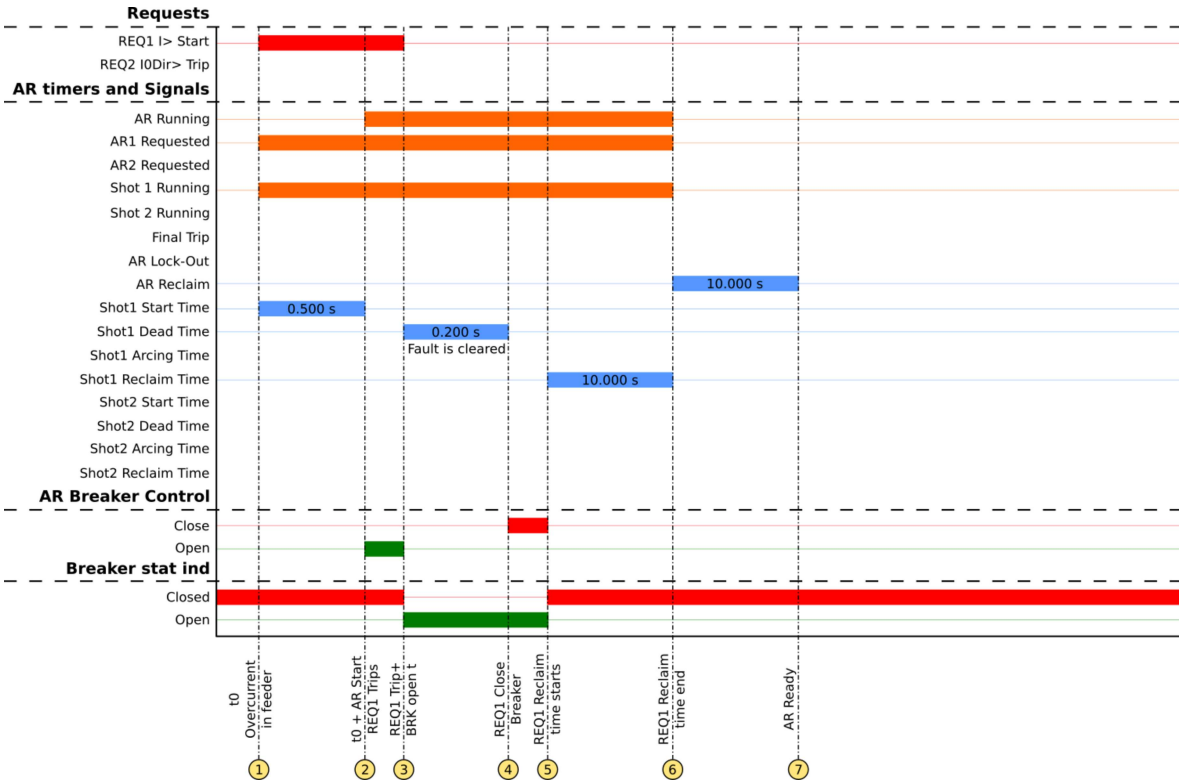

1. An overcurrent is found in the protected line causing the I> protection to pick up. This activates the AR1 Requested signal to begin to calculate the Shot1 Start Time. This activates the Shot 1 Running signal eventhough the auto-recloser function is not yet running.
2. The Shot1 Start Time (500 ms) for has elapsed and the auto-recloser function starts running (AR Running). This sends an "Open" command to the breaker.
3. The circuit breaker is opened and the I> stage's START signal is released and simultaneously REQ1 trip signal for auto-reclosing is released. The auto-recloser function starts calculating the Shot1 Dead Time to close the breaker.
4. The fault is cleared during the Shot1 Dead Time (200 ms). When this time is exceeded, the auto-recloser function sends a "Close" request to the object breaker: the conditions are met and the breaker's "Close" command is sent to the breaker's close coil.
5. The circuit breaker is closed and since the fault was cleared, no pick-ups are detected. A "Close" command is dropped after the breaker's "Closed" indication is received and the auto-recloser function starts calculating the Shot1 Reclaim Time.
6. The Shot1 Reclaim Time (10 s) is exceeded, and so the AR Running, AR1 Requested and Shot 1 Running signals are terminated and the AR Reclaim calculation begins. The difference between auto-reclosing and shot-specific reclaim times is that the function jumps to the next available shot should the fault returns. If a fault returns after a successful cycle and the function's AR Reclaim signal is active, the function jumps directly to the Final Trip state and then enters the lock-out state. The user can control this behavior through the function settings. Both reclaim times can be set to 0 s when they are not needed, and the function skips all timers that are set to zero. The user can also set is so that AR Reclaim is not used at all after a successful recloser cycle.
7. The AR Reclaim time is exceeded and the function is set to "Ready" to wait for the next request.

© Arcteq Relays Ltd

Auto-recloser in meshed or ring networks

A typical auto-recloser scheme cannot be applied directly to an overhead line network that has a distributed generation (DG) component; this situation will become more common as renewable power sources become more widespread. Instead, this requires a two-end auto-recloser scheme where the two relays at both ends of the line function in a master–follower operation. The DG power plant must be disconnected from the rest of the network before the breaker's "Close" command is applied; otherwise the plant keeps the fault on during the auto-recloser's dead time and thus fails the reclosing. Additionally, when the main grid is disconnected from the DG power plant, the closing of the breaker is likely to cause phase shifting issues during the dead time.

Figure. 4.6.8 - 243. Auto-reclosing with distributed generation in the line.

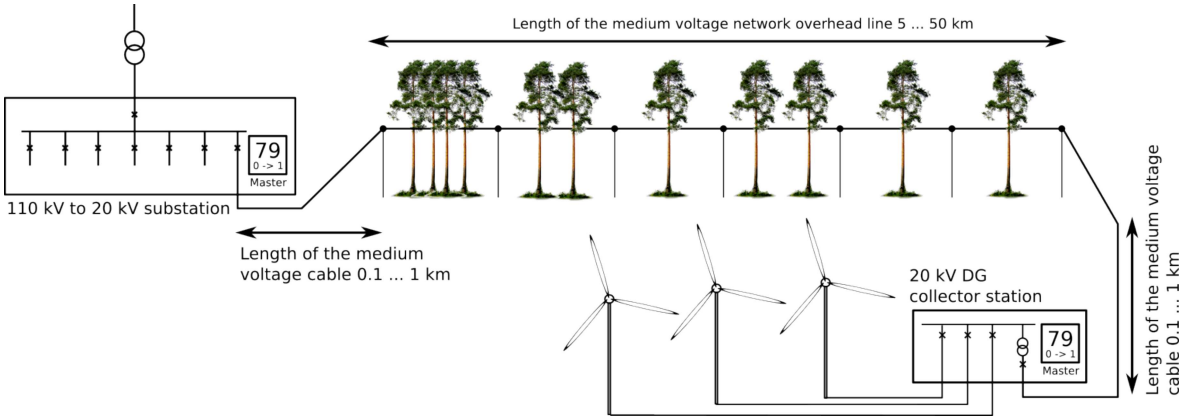

This operation requires a link between the 110/20 kV substation's master relay and the 20 kV collector substation's follower relay. When the auto-recloser function is initiated, the collector station's breaker is opened and remains open until the auto-recloser sequence is over as there is no reason to close the breaker until the auto-recloser cycle has successfully cleared the fault. When the sequence is succesful, the collector substation's breaker is given permission to close after the reclaim time; the breaker should be closed with the Synchrocheck function.

Once the collector substation is disconnected, the previously described basic principles of auto-reclosing apply. This method applies to all meshed or ring networks where the same line is fed power from multiple directions. This problem does not exist for typical consumer (radial) networks.

Arcing time and discrimination time

Generally, after the dead time has elapsed and the breaker is closed by the auto-recloser, this happens: the reclaim time starts calculating and if the process is interrupted by a new reclosing request, the function continues to the next state (the next available shot, or the Final Trip if no more shots are available). However, the user can use the "Shot action time" setting to contol this behavior. The two settings are mutually exclusive: when "Arcing" is selected for a shot, "Discrimination" cannot be selected for the same shot.

The "Arcing" setting is used to control the auto-recloser when the START signal of a stage makes the requests. If the request (e.g. I> START) activates during the reclaim time, an arcing time calculation begins. If the fault persists, the function continues to the next state. If an arcing time calculation begins but stops before the set time has passed, the reclaim calculation continues normally. When that time has elapsed, the auto-recloser function returns either to the general reclaim time or to the Ready mode; the shot is considered successful. The arcing time counter does not reset when the reclaim calculation continues: every time it activates, it continues from where it left off. This means that the time set to the "ARx Shot action time" parameter is a cumulative counter of time allowed before deciding whether a shot is failed or successful.

The auto-recloser is sometimes used in time-coordinated, IDMT-protected networks that have old mechanical relays with current-dependent release times. In these cases the operation of the protection selectivity must be guaranteed by allowing all relay timing devices to completely reset during dead time to maintain the correct time discrimination after reclosing to the fault. Some mechanical IDMT relays can require up to ten seconds (10 s) to reset. When short dead times are required, the relays should reset almost immediately for the current-dependent time grading to operate as expected, and set the discrimination time (instead of the arcing time) to start simultaneously with the reclaim time. If new reclosing requests are made during this discrimination time, the function halts and lets the protection devices operate based on their own settings, and does not interfere with the protection functions' or the breaker's operation. However, this means that the auto-recloser has to be manually reset and the breaker manually closed before further reclosing requests can be made.

Auto-recloser I/O

The main outputs of the auto-recloser function are the control signals OBJECT OPEN and OBJECT CLOSE. The function also reports the recloser status information which is used in the logics, LED indications, and applied operations.

The inputs of the function are the following:

- binary recloser request signals
- blockings
- controlling signals
- the controlled object's monitoring and status signals.

The function generates general time-stamped ON/OFF events to the common event buffer from each of the two (2) output signal as well as from several operational event signals. The time stamp resolution is 1 ms. The function also a resettable cumulative counter for each of the applied reclosing events and requests.

The auto-recloser function can be divided into the starter, shot selector state machine, sorter and shot blocks which operate dynamically during the recloser sequences according to the given settings and input signal monitoring. The behavior of the function can be changed even during sequences that are based on programmed reclosing schemes and on active requests.

As the diagram above shows, the auto-recloser function is tied to and dependent on the block status information and configuration of the object control and monitoring function. This is why the controlled object must be configured before the auto-recloser function can be used. The object control block supervises all breaker operations: this means that breaker-related functionalitites (e.g. synchrocheck, breaker status monitoring) are not noted separately by the auto-recloser function. If any of these fail during the circuit breaker opening or closing, the object control function reports the event to the auto-recloser function which then takes the corresponding action.

In addition to the previously mentioned cases, the manual control of the breaker (whether open or close during the auto-recloser sequence) also always causes a reset of the auto-recloser. For example, if a breaker is closed manually during dead time towards a fault, the auto-recloser function enters the general reclaim mode and causes a lock-out of the function.

The auto-recloser function gives exhaustive information about its operations and statuses through online indications, events, registered data as well as output signals which can be configured to any output or logical input in the device. If the network configuration is altered during an auto-reclosing sequence, the operation of the auto-recloser function can also be modified accordingly by switching to a setting group that matches the changed network situation.

© Arcteq Relays Ltd

Input signals of the auto-recloser function

The required auto-recloser scheme determines how many and which setting parameters are needed. All status changes in the input signals (inc. the requests) always cause recorded events, also in the object's registers and the object's continuous status indications. Events can be enabled or disabled according to the application requirements.

Table. 4.6.8 - 502. AR input signals.

Signal	Range	Description
AR On/ Off	Any binary signal in the device	Enables or disables the auto-recloser function with any binary signal selected by the user. The parameter "Use AR On/Off signals" defines whether this input signal is in use or not.
AR Manual reset	Any binary signal in the device	Allows for the manual resetting of the recloser if locked (e.g. due to Final Trip).
AR Locking	Any binary signal in the device	Locks the auto-recloser so that it requires a manual reset before its operation can be set to "Ready".
AR Critical request	Any binary signal in the device	Defines the critical request for the function. If this signal is activated, the auto-recloser goes directly to the locked state the moment the request is received.

Table. 4.6.8 - 503. Request signals.

Signal	Range	Description
AR Request 1 (REQ1)	Any binary signal in the device	The request with the highest priority, it overrides all auto-reclosing requests with lower priorities. When this request signal is activated and other conditions for reclosing are met, a shot is applied.
AR Request 2 (REQ2)	Any binary signal in the device	The request with the second highest priority, it overrides all auto-reclosing requests with lower priorities. When this request signal is activated and other conditions for reclosing are met, a shot is applied.
AR Request 3 (REQ3)	Any binary signal in the device	The request with the third highest priority, it overrides all auto-reclosing requests with lower priorities. When this request signal is activated and other conditions for reclosing are met, a shot is applied.
AR Request 4 (REQ4)	Any binary signal in the device	The request with the fourth highest (and second lowest) priority, it overrides all auto-reclosing requests with lower priorities. When this request signal is activated and other conditions for reclosing are met, a shot is applied.
AR Request 5 (REQ5)	Any binary signal in the device	The request with the lowest priority, it is overridden by all other auto-reclosing requests. When this request signal is activated and other conditions for reclosing are met, a shot is applied.

Output signals of the auto-recloser function

The outputs of the function are only indication signals (*Control → Control functions → Auto-recloser → I/O*). The breaker's "Open" and "Close" commands are controlled by the object control and monitoring function.

Table. 4.6.8 - 504. AR output signals.

Signal	Description
AR ON AR OFF	The signal "AR ON" is displayed when the auto-recloser function is enabled. The signal "AR OFF" is displayed if the "Use AR On/Off signals" is set to "Yes" and the input of the AR On/Off is inactive.
AR In progress	The signal "AR In progress" is activated and displayed when the function has opened the breaker and is calculating the time towards closing it.
AR1 Request ON	The signal "AR1 Request ON" is activated and displayed when the function is executing a shot requested by REQ1.
AR2 Request ON	The signal "AR2 Request ON" is activated and displayed when the function is executing a shot requested by REQ2.
AR3 Request ON	The signal "AR3 Request ON" is activated and displayed when the function is executing a shot requested by REQ3.
AR4 Request ON	The signal "AR4 Request ON" is activated and displayed when the function is executing a shot requested by REQ4.
AR5 Request ON	The signal "AR5 Request ON" is activated and displayed when the function is executing a shot requested by REQ5.
AR Running	The signal "AR Running" is activated and displayed when the function is in Running mode.
AR Shot 1 Running	The signal "AR Shot 1 Running" is activated and displayed when the function is executing Shot 1.
AR Shot 2 Running	The signal "AR Shot 2 Running" is activated and displayed when the function is executing Shot 2.
AR Shot 3 Running	The signal "AR Shot 3 Running" is activated and displayed when the function is executing Shot 3.
AR Shot 4 Running	The signal "AR Shot 4 Running" is activated and displayed when the function is executing Shot 4.
AR Shot 5 Running	The signal "AR Shot 5 Running" is activated and displayed when the function is executing Shot 5.
AR Sequence finished	The signal "AR Sequence finished" is activated and displayed when the function has closed the breaker after the last shot and is waiting for the Final Trip to occur or for the reclaim time to run out.
AR Final Trip	The signal "AR Final Trip" is activated and displayed when the function has executed the Final Trip command.

© Arcteq Relays Ltd
IM00099

Signal	Description
AR Dead time ON	The signal "AR Dead time ON" is activated and displayed when the function has opened the breaker and is calculating the time towards closing it.
AR Arcing time ON	The signal "AR Arcing time ON" is activated and displayed when the function is calculating the arcing time.
AR Reclaim time ON	The signal "AR Reclaim time ON" is activated and displayed when the function is calculating the reclaim time.
AR Ready	The signal "AR Ready" is activated and displayed when the function is ready to execute the auto-reclosing sequence if a fault is detected.
AR Lockout after successful sequence	The signal "AR Reclaim time ON" is activated and displayed when the auto-recloser sequence has been successful but a new fault was detected before the lock-out time was depleted. No new sequence will be started while this signal is active, instead the function goes into the locked mode.
AR Operation inhibit	The signal "AR Operation inhibit" is activated and displayed when the function is in Inhibit mode.
AR Locked	The signal "AR Locked" is activated and displayed when the function is in Locked mode.

Setting parameters

The auto-recloser function has settings that the user can freely configure. The setting cover all areas of the function so that the user can control the operational details of the function as needed. The function's operation can be static or dynamic depending on the setting group that is in use. The function has both general settings and active settings concerning requests and shots. The general settings control the desired object selection as well as the general behavior of the function in different operating schemes.

Table. 4.6.8 - 505. AR Status and basic settings.

Setting	Range	Default	Description
Auto-recloser [79] Mode	• Disabled • Enabled	Disabled	Enables and disables the auto-recloser function in the configuration.
AR LN mode	• On • Blocked • Test • Test/Blocked • Off	On	Set mode of AR block. This parameter is visible only when *Allow setting of individual LN mode* is enabled in *General* menu.
AR LN behaviour	• On • Blocked • Test • Test/Blocked • Off	-	Displays the mode of AR block. This parameter is visible only when *Allow setting of individual LN mode* is enabled in *General* menu.
Use AR On/Off signals	• Yes • No	No	Selects whether or not the AR ON and AR OFF signals are used. If set to "No" the auto-recloser is always in use. If set to "Yes" binary signal set to "AR ON/OFF" has to be active for the auto-recloser to be enabled.

Setting	Range	Default	Description
AR Status	• AR is inhibit • AR is ready • AR is locked • AR is running • AR is not running • Lock out delay is running • Reclaim time counting • Start time counting • Dead time counting • Arcing or discr. time counting • Reclaim time counting • AR1 Requested • AR2 Requested • AR3 Requested • AR4 Requested • AR5 Requested • Executing Shot1 • Executing Shot2 • Executing Shot3 • Executing Shot4 • Executing Shot5 • Shot Clear	-	When clicked open, displays the status of the function.

© Arcteq Relays Ltd

Setting	Range	Default	Description
AR force status to	• AR is inhibit • AR is ready • AR is locked • AR is running • AR is not running • Lock out delay is running • Gen. reclaim time counting • Start time counting • Dead time counting • Arcing or discr time counting • Shot reclaim time counting • AR1 requested • AR2 requested • AR3 requested • AR4 requested • AR5 requested • Executing shot1 • Executing shot2 • Executing shot3 • Executing shot4 • Executing shot5 • Shot clear	-	Force the status of the function. Visible only when *Enable stage forcing* parameter is enabled in *General* menu.
Timer active	• - • AR Lockout • AR Reset Reclaim • AR Start Delay • AR Dead Time • AR Discrimination • AR Shot Reclaim	-	When the function is counting down towards any action, this parameter displays what is the next expected action when the "AR Timer value" reaches zero.
AR Timer value	0...1800.00s	0s	When the function is counting down towards any action, this parameter displays how much time is left until the action is executed. The "Timer active" setting displays what is the action when this timer reaches zero.

Table. 4.6.8 - 506. AR General settings.

Setting	Range	Step	Default	Description
Object for AR	• Object 1 • Object 2 • Object 3 • Object 4 • Object 5	-	Object 1	Defines the monitored and/or controlled object, and the monitoring and/or controlling signals issued. This selection can be changed via the device's setting group selection in real time.
AR Enabled in SG	• Disabled • Enabled	-	Disabled	Enables and disables the auto-recloser in the current setting group. Can be enabled and disabled in each setting group independently. This selection can be changed via the device's setting group selection in real time.
Require manual resetting	• Required • Obj Close CMD resets	-	Required	Defines the auto-recloser resetting after locking (Final trip, error condition). Resetting can be set to be only done manually with a user defined signal, or it can be reset by a general breaker "Close" command (from any source). This selection can be changed via the device's setting group selection in real time.
Successful reclose start general reclaim	• Only shot reclaim • Shot reclaim and general reclaim	-	Only shot reclaim	Defines whether the auto-recloser runs after a successful reclose (inc. shot reclaim time), or whether it enters the locked state after a request for auto-reclosing is applied. If "Shot reclaim and general reclaim" is selected, this selection defines the minimum time allowed between auto-reclosing cycles without changing the shot-specific reclaim times. This selection can be changed via the device's setting group selection in real time.
Lock-out time ("Lockout after successful AR")	0.000…1800.000s	0.005s	0.000s	Defines the lock-out time after a successful reclosing. When set to 0.00 s, the recloser goes directly into the "Ready" state after a successful reclosing. If this time is running while a new reclosing request is applied, the auto-recloser opens the breaker and enters the locked state to prevent further reclosing attempts. This selection can be changed via the device's setting group selection in real time.
Object close reclaim time	0.000…1800.000s	0.005s	10.000s	Defines the "Close" reclaim time of the object. This time starts when the object is manually closed or when the general reclaim time is selected after a successful auto-reclosing. If an auto-reclosing request is applied during this time, the auto-recloser enters the locked state to prevent further reclosing attempts. This selection can be changed via the device's setting group selection in real time.

Table. 4.6.8 - 507. Auto-recloser shot settings.

Setting	Range	Step	Default	Description
ARx Shot x	• Disabled • Enabled	-	Disabled	Enables/disables Shot x for request ARx. If "Disabled", the ARx request skips Shot 1 and moves on to the next enabled shot. If "Enabled", the ARx request executes a shot according to Shot 1 settings. This selection can be changed via the device's setting group selection in real time.

© Arcteq Relays Ltd

Setting	Range	Step	Default	Description
ARx Shot starting delay	0.000…1800.000s	0.005s	0.000s	Defines the starting delay of the shot, i.e. the minimum time an ARx request has to be active before openign the breaker and entering the dead time delay counting. This setting is used only when the ARx request comes from the function's START signal. If the function's TRIP request starting delay in not 0.000 s, the auto-recloser is prevented from starting. Whenever the shot is not the first one, this setting should be set to 0.000 s. This selection can be changed via the setting group selection in real time.
ARx Shot dead time delay	0.000…1800.000s	0.005s	0.000s	Defines the dead time delay of the shot, i.e. the breaker's "Open" time before the auto-recloser closes the breaker. The time calculation starts from the breaker's "Open" signal. This selection can be changed via the device's setting group selection in real time.
ARx Shot Arc or Discr.	• Arcing • Discrimination	-	Arcing	Determines what happens when a fault persists after a dead time when the breaker is closed. Can be chosen between arcing and discrimination behavior; the selection depends on the application. When "Arcing" time is selected, the auto-recloser keeps the breaker closed until Action time is spent (also with Discrimination time). If a new request received during the Action time calculation, the auto-recloser locks out during the reclaim time. This selection can be changed via the device's setting group selection in real time.
ARx Shot action time	0.000…1800.000s	0.005s	0.000s	Defines the action time for the shot after dead time and after the breaker is closed, i.e. the maximum arcing time or discrimination time when the reclaim time is running. When set to 0.000 s, the "Arcing" or "Discrimination" time is disabled in the auto-recloser scheme. This setting can be changed via the device's setting group selection in real time.
ARx Shot reclaim time	0.000…1800.000s	0.0005s	0.000s	After the dead time has elapsed and the breaker is closed by the auto-recloser, the reclaim time starts calculating. If the process is interrupted by a new reclosing request, the function continues to the next shot.

Figure. 4.6.8 - 244. Auto-recloser shot setting parameters.



The auto-recloser function's shot settings are grouped into corresponding rows to make the setting of each shot straightforward. From the settings the user can see how the reclosing cycle is executed by each request, which functions initiate requests, and which shots and requests are in use.

© Arcteq Relays Ltd

The setting example in the image above presents a two-shot auto-recloser. One can see that the REQ1 is started by I> START signal. The starting delay is 500 ms, followed by a 200 ms dead time; after a 200 ms "Arcing" time and a 10 s reclaim time Shot 1 is executed. If Shot 1 fails, there is a 120 s dead time, a 200 ms "Arcing" time and a 10 s reclaim time before Shot 2 is executed. If Shot 2 fails, the auto-recloser initiates the Final Trip. In REQ2, the settings are otherwise the same, except I> TRIP and I0dir> TRIP are used to activate the request, Shot 1 does not have a starting delay, the dead time delay for Shot 2 is different and the action time for both shots is zero. REQ3 has just one shot with a 60 second dead time and a 30 ms shot reclaim. If REQ4 or REQ5 are activated, no shots are executed as none are set.

Inhibit and Locked states of the auto-recloser function

The auto-recloser function can have several reasons to go into "Lock-out" and "Inhibit" states where reclosing cannot be allowed for some reason. When the function enters the "Not ready" state, it gives an indication of the reason why it cannot be in the "Ready" state in order to quickly rectify whatever is causing the problem of the functions operation. The reason is indicated in the auto-recloser function's *Registers* menu.

The Inhibit reasons for the auto-recloser are the following:

- AR is blocked (from Blocking input)
- AR is not enabled (signal connected to "AR ON/OFF" is not active)
- AR is calculating the lock-out delay
- The object "Open" or "Close" command is blocked
- The object status is not known ("intermediate" or "bad" status)
- General reclaim time is running
- AR is locked

When the auto-recloser function is in the "Inhibit" state, it returns to the "Ready" state when the reason for the inhibition is removed.

The Lock-out reasons for the auto-recloser are the following:

- The "AR Locked" signal is initiated (from "AR Locking" input)
- The Final Trip signal is given
- The "object not ready" failed within a given time (from Object)
- The "object no sync" failed within a given time (from Object)
- The object's "Open" timeout (from Object)
- The object's "Close" timeout (from Object)
- AR request initiated during General reclaim time
- AR request was not released during Dead Time
- Critical request initated in any state of the auto-reclosing cycle

When the auto-recloser function is in the "Locked" state, it can be recovered only through by reset input, or by manually resetting the breaker. This depends on what the "Require manual resetting" parameter's setting is.

Displaying auto-reclosing timers in MIMIC view

The user can enable timers to be displayed in the MIMIC view. Enable the AR timer value at *Tools* → *Events and logs* → *Set alarm events* (see the image below). The timer displays the reclaim time and the dead time delay.

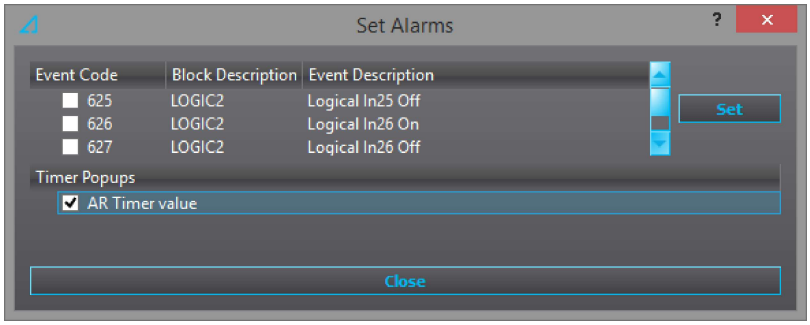

Events and registers

The auto-recloser function (abbreviated "AR" in event block names) generates events and registers from the status changes in the events listed below. The user can select which event messages are stored in the main event buffer: ON, OFF, or both. The events triggered by the function are recorded with a time stamp.

Table. 4.6.8 - 508. Event messages.

Event block name	Event names
AR1	AR Ready ON/OFF
AR1	AR Locked reset
AR1	AR Reclosing request rejected ON/OFF
AR1	AR Reclosing request ON/OFF
AR1	User-operated Object AR halted and reset
AR1	Object failure, AR locked
AR1	Shot failed
AR1	AR cycle ends due to a discrimination request
AR1	AR Shot clear
AR1	Object "Close" request ON/OFF
AR1	Object "Open" request
AR1	Inhibit condition ON/OFF
AR1	Locking condition ON/OFF
AR1	AR1 Request ON/OFF
AR1	AR2 Request ON/OFF
AR1	AR3 Request ON/OFF
AR1	AR4 Request ON/OFF
AR1	AR5 Request ON/OFF
AR1	Critical request ON/OFF
AR1	AR Running ON/OFF

© Arcteq Relays Ltd

Event block name	Event names
AR1	Shot 1 Execute ON/OFF
AR1	Shot 2 Execute ON/OFF
AR1	Shot 3 Execute ON/OFF
AR1	Shot 4 Execute ON/OFF
AR1	Shot 5 Execute ON/OFF
AR1	Seqeunce finished, the Final trip armed
AR1	Final trip executed ON/OFF
AR1	Lock-out time ON/OFF
AR1	General reclaim time ON/OFF
AR1	Shot start time ON/OFF
AR1	Dead time ON/OFF
AR1	Arc Discr time ON/OFF
AR1	Shot reclaim time ON/OFF
AR1	Sequence finished OFF
AR1	AR ON/OFF
AR1	AR Running (DT) ON/OFF

The function registers its operation into the last twelve (12) time-stamped registers. The register of the function records the ON event process data from statuses, commands, etc.

The table below presents the structure of the auto-recloser function's register content.

Table. 4.6.8 - 509. Register content.

Register	Description
Date and time	dd.mm.yyyy hh:mm:ss.mss
Event	Event name
Setting group in use	1...8
Inhibit condition active	Inhibit reason ON
Inhibit condition release	Inhibit reason OFF
Locked condition active	Locked reason ON
Locked condition release	Locked reason OFF
AR status	The status code of the auto-recloser function
Active timer	Timer ON

Register	Description
Active time	The value of the timer

Auto-recloser operation counters

The auto-recloser function keeps statistical track of the operated auto-reclosing cycles as well as of successful and failed shots.

The function records the following counters:

- Shot 1…5 started
- Shot 1…5 requested by AR1…5
- Shots failed
- Final trips
- Shots cleared
- AR started

The counters are cumulative and they update automatically according to the operations of the auto-recloser function. They can be found in the *Statistics* tab at *Control* → *Auto-recloser* → *Registers*.

4.6.9 Zero sequence recloser (U0> RECL; 79N)

When earth fault current is so low that it is not possible for directional earth fault protection functions to detect the direction of the fault, zero sequence recloser control function can be used together with neutral overvoltage (59N) function as a backup for finding an outgoing feeder with a fault while disconnecting as few healthy feeders as possible and reconnecting them back as quickly as possible. Feeders are set up to trip one by one in small time increments. If the fault was not cleared by tripping the feeder the breaker will be closed and the next feeder will be opened. This will go on until faulty feeder is disconnected. No communication between needed between the feeder protection relays.

The blocking signal and the setting group selection control the operating characteristics of the function, i.e. the user or user-defined logic can change function parameters while the function is running. The function has a total of eight (8) setting groups available.

General settings

The following general settings define the general behavior of the function. These settings are static i.e. it is not possible to change them by editing the setting group.

Table. 4.6.9 - 510. General settings of the function.

Name	Range	Default	Description
U0> RECL [79] LN mode	• On • Blocked • Test • Test/Blocked • Off	On	Set mode of NJK block. This parameter is visible only when *Allow setting of individual LN mode* is enabled in *General* menu.

© Arcteq Relays Ltd

Name	Range	Default	Description
U0> RECL force status to	• Normal • Block On • Requested On • BK clo cmd On • Bk Closed.U0> blocked On	Normal	Force the status of the function. Visible only when *Enable stage forcing* parameter is enabled in *General* menu.

Table. 4.6.9 - 511. U0> recloser activation inputs.

Name	Description
Enable input	Input defined here must be active for the recloser to be enabled.
Function trip input	Detection of neutral overvoltage trip (U0> TRIP). Starts the reclosing sequence.
Function blocked input	Detection of neutral overvoltage protection being blocked (U0> BLOCKED). When this input is activated the breaker will be closed after time set to "Reclose time for U0> RECL" has passed. See *Application example* section for more detail.

Operating time characteristics

When zero sequence recloser function detects neutral overvoltage trip it activates a circuit breaker close command after a set time delay. Please note that the zero sequence recloser function actually follows the "Function blocked input" status when counting down towards reclosing. See *Application example* for more details.

Setting group selection controls the operating characteristics of the function, i.e. the user or user-defined logic can change function parameters while the function is running.

Table. 4.6.9 - 512. Operating time characteristics setting parameters.

Name	Range	Step	Description
Reclose time for U0> RECL	0.000...1800.000 s	0.005 s	Breaker reclosing time delay after neutral overvoltage trip. "Function blocked input" signal must stay active for the duration of time delay.

Function outputs

Zero sequence recloser generates output signals listed in the table below. These signals are used together with neutral overvoltage function (59N) inputs and outputs to control the reclosing sequence.

Table. 4.6.9 - 513. Outputs of the zero sequence recloser function.

Name	Description
U0> RECL Blocked	Zero sequence recloser function does not have "Enable input" active. The function will not generate reclosing command.
U0> RECL Active	Zero sequence recloser function has detected a neutral overvoltage trip. Stays active until fault is cleared.
U0> RECL CLOSE	Close command for circuit breaker. Activated after neutral overvoltage trip and time delay set to "Reclose time for U0> RECL" parameter has passed.
U0> RECL BLKU0	Connect to neutral overvoltage protection U0> BLOCK input. Blocks neutral overvoltage protection from opening the breaker after reclosing. Stays active until the fault is cleared.

Application example

Figure. 4.6.9 - 245. Example application of zero sequence recloser. Each feeder has slighly longer operation time delay than the previous one.

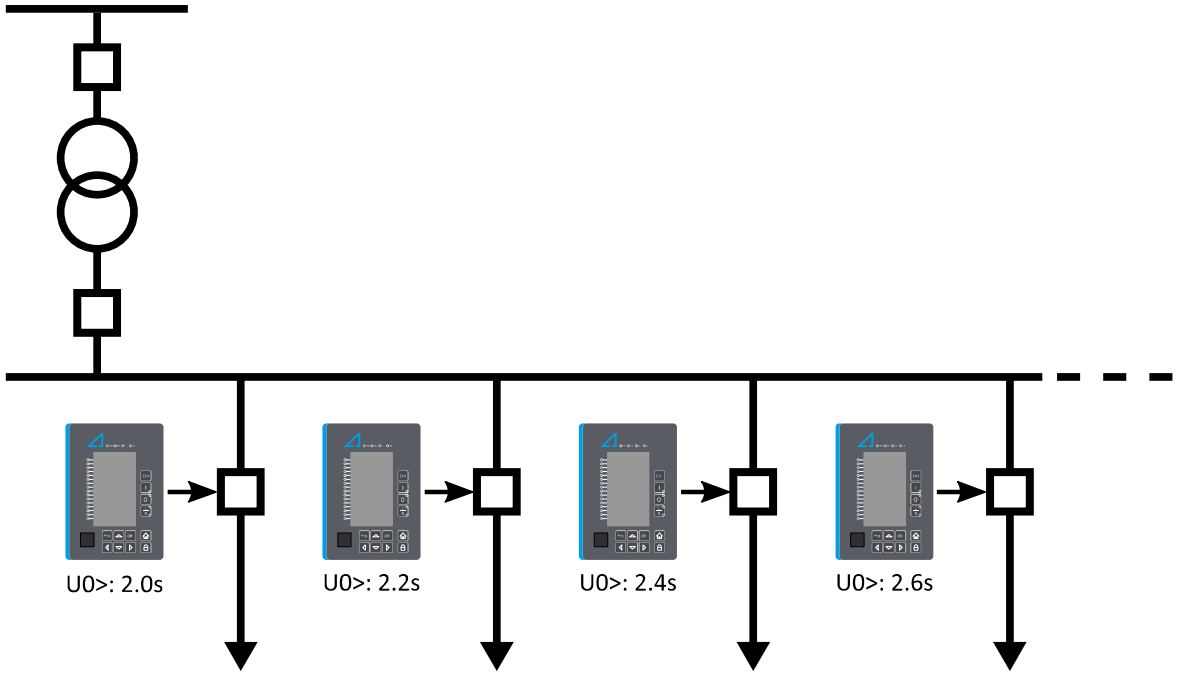

Table. 4.6.9 - 514. Common settings for each feeder.

Setting	Connection
U0> BLOCK input	U0> RECL BLKU0 Circuit breaker open status
U0> TRIP output	Digital output connected to circuit breaker open coil
U0 RECL Enable input	Programmable control switch, digital input or other binary signal

© Arcteq Relays Ltd

Setting	Connection
U0 RECL Function trip input	U0> TRIP signal
U0 RECL Function blocked input	U0> BLOCKED signal

From the point of view of first feeder, with the settings used above, if the fault is in the first feeder the following sequence happens:

1. Neutral overvoltage function trips the breaker.
2. Neutral voltage drops. Fault is cleared.

If the fault is not in the first feeder, the following sequence happens:

1. Neutral overvoltage function trips the breaker.
2. Neutral voltage doesn't drop → U0> BLOCKED is activated from fault being still present and circuit breaker being opened → U0> RECL BLKU0 is activated from U0> BLOCKED.
3. Breaker is closed after "Reclose time for U0> RECL" has passed.
4. Both neutral overvoltage protection function and zero sequence reclosing function are blocked until fault is cleared.

Read-only parameters

The function's *Info* page displays useful, real-time information on the state of the protection function. It is accessed either through the device's HMI display, or through the setting tool software when it is connected to the device and its Live Edit mode is active.

Table. 4.6.9 - 515. Information displayed by the function.

Name	Range	Description
U0> RECL LN behaviour	• On • Blocked • Test • Test/Blocked • Off	Displays the mode of NJK block. This parameter is visible only when *Allow setting of individual LN mode* is enabled in *General* menu.
U0> RECL condition	• Normal • Requested • Blocked • Active • BK clo cmd • Bk Closed.U0> blocked	Displays status of the control function.

Events and registers

The zero sequence recloser function (abbreviated "NJK" in event block names) generates events and registers from the status changes in the events listed below. The user can select which event messages are stored in the main event buffer: ON, OFF, or both. The events triggered by the function are recorded with a time stamp.

Table. 4.6.9 - 516. Event messages.

Event block name	Event names
NJK1	U0RECL Request ON/OFF
NJK1	U0RECL Blocked ON/OFF
NJK1	U0RECL Active ON/OFF
NJK1	U0RECL Breaker close request ON/OFF
NJK1	U0RECL U0 Blocking ON/OFF

The function registers its operation into the last twelve (12) time-stamped registers; this information is available for all provided instances separately. The register of the function records the ON event process data for CLOSE and BLOCKED. The table below presents the structure of the function's register content.

Table. 4.6.9 - 517. Register content.

Register	Description
Date and time	dd.mm.yyyy hh:mm:ss.mss
Event	Event name
Setting group in use	1...8
U0> RECL time before close	-
U0> RECL been active	-

4.6.10 Cold load pick-up (CLPU)

The cold load pick-up function is used for detecting so-called cold load situations, where a loss of load diversity has occured after distribution has been re-energized. The characteristics of cold load situations vary according to the types of loads individual feeders have. This means that this function needs to be set specifically according to the load type of the feeder it is monitoring. For example, in residential areas there are relatively many thermostat-controlled devices (such as heating and cooling machinery) which normally run in asynchronous cycles. When restoring power after a longer power outage, these devices demand the full start-up power which can cause the inrush current to be significantly higher than what the load current was before the outage. This is uncommon in industrial environments since the restoring of the production process takes several hours, or even days, and the power level goes back to the level it was before the outage. However, some areas of the industrial network may find the cold load pick-up function useful.

Measured input

The function block uses fundamental frequency component of phase current measurement values.

Table. 4.6.10 - 518. Measurement inputs of the cold load pick-up function.

Signal	Description
I_{L1}RMS	Fundamental frequency component of phase L1 (A) current

© Arcteq Relays Ltd
IM00099

Signal	Description
I_{L2}RMS	Fundamental frequency component of phase L2 (B) current
I_{L3}RMS	Fundamental frequency component of phase L3 (C) current

General settings

The following general settings define the general behavior of the function. These settings are static i.e. it is not possible change them by editing the setting group.

Table. 4.6.10 - 519. General settings.

Name	Range	Default	Description
CLPU LN mode	• On • Blocked • Test • Test/ Blocked • Off	On	Set mode of CLP block. This parameter is visible only when *Allow setting of individual LN mode* is enabled in *General* menu.
Measurement side	• Side 1 • Side 2 • Side 3	Side 1	Defines which current measurement module is used by the function. Only visible when there is more than one module.
Condition	• Normal • Curr low • Overcurrent On • CLPU On • CLPU blocked	Normal	Displays the status of the function.

Pick-up settings

The I_{low}, I_{high} and I_{over} setting parameters control the the pick-up and activation of the cold load pick-up function. They define the maximum and minimum allowed measured current before action from the function. The function constantly calculates the ratio between the setting values and the measured magnitude (I_m) for each of the three phases. The reset ratio of 97 % is built into the function and is always relative to the setting value. The setting value is common for all measured phases. When the I_m exceeds the setting value (in single, dual or all phases) it triggers the pick-up operation of the function.

Setting group selection controls the operating characteristics of the function, i.e. the user or user-defined logic can change function parameters while the function is running.

Table. 4.6.10 - 520. Pick-up settings.

Name	Range	Step	Default	Description
I_{low}	0.01…40.00×In	0.01×In	0.20×In	The pick-up setting for low current detection. All measured currents must be below this setting in order for the cold load pick-up signal to be activated.
I_{high}	0.01…40.00×In	0.01×In	1.20×In	The pick-up setting for high current detection. All measured currents must exceed this setting in order for the cold load pick-up signal to be activated.

Name	Range	Step	Default	Description
I_{over}	0.01…40.00×In	0.01×In	2.00×In	The pick-up setting for overcurrent detection. If this setting is exceeded by any of the measured currents, the cold load pick-up signal is released immediately.

Read-only parameters

The function's *Info* page displays useful, real-time information on the state of the protection function. It is accessed either through the device's HMI display, or through the setting tool software when it is connected to the device and its Live Edit mode is active.

Table. 4.6.10 - 521. Information displayed by the function.

Name	Range	Description
CLPU LN behaviour	• On • Blocked • Test • Test/ Blocked • Off	Displays the mode of CLP block. This parameter is visible only when *Allow setting of individual LN mode* is enabled in *General* menu.
CLP condition	• Normal • Curr low • Overcurrent On • CLPU On • CLPU blocked	Displays status of the control function.

Function blocking

The blocking signal is evaluated at the start of each program cycle. The blocking signals are connected to the function's dedicated input, which can be configured in the *IO → Blocking Input Control* tab of the function.

- When the pick-up element activates and the blocking signal is not active, a CLPU ACT signal is generated, and the function starts or continues with the trip time countdown.
- When the pick-up element activates and the blocking signal is active, a BLOCKED signal is generated, and the function does not process the event further.
- When CLPU ACT signal is already active and the blocking input signal becomes active, the CLPU ACT signal is reset and BLOCKED signal is generated. The release time characteristics are then processed in the same way as when the pick-up signal is reset.

The blocking signal needs to reach the device minimum of 5 ms before the set operating delay has passed in order for the blocking to activate in time.

Operating time characteristics

The behavior of the function's operating timers can be set for activation as well as for the situation monitoring and release of the cold load pick-up.

The table below presents the setting parameters for the function's time characteristics.

© Arcteq Relays Ltd
IM00099

Table. 4.6.10 - 522. Setting parameters for operating time characteristics.

Name	Range	Step	Default	Description
T_{set}	0.000…1800.000s	0.005s	10.000s	The function's start timer which defines how long the I_{low} condition has to last before the cold load pick-up is activated.
T_{max}	0.000…1800.000s	0.005s	30.000s	The function's maximum timer which defines how long the starting condition can last and for how long the current is allowed to be over I_{high}.
T_{min}	0.000…1800.000s	0.005s	0.040s	The function's minimum timer which defines how long the starting condition has to last at the minimum. If the start-up sequence includes more than one inrush situation, this parameter may be used to prolong the cold load pick-up time over the first inrush. Additionally, this parameter operates as the "reclaim" time for the function in case the inrush current is not immediately initiated in the start-up sequence.

The six examples below showcase some typical cases with the cold load pick-up function.

Figure. 4.6.10 - 246. Example of timers and pick-up parameters (normal CLPU situation).

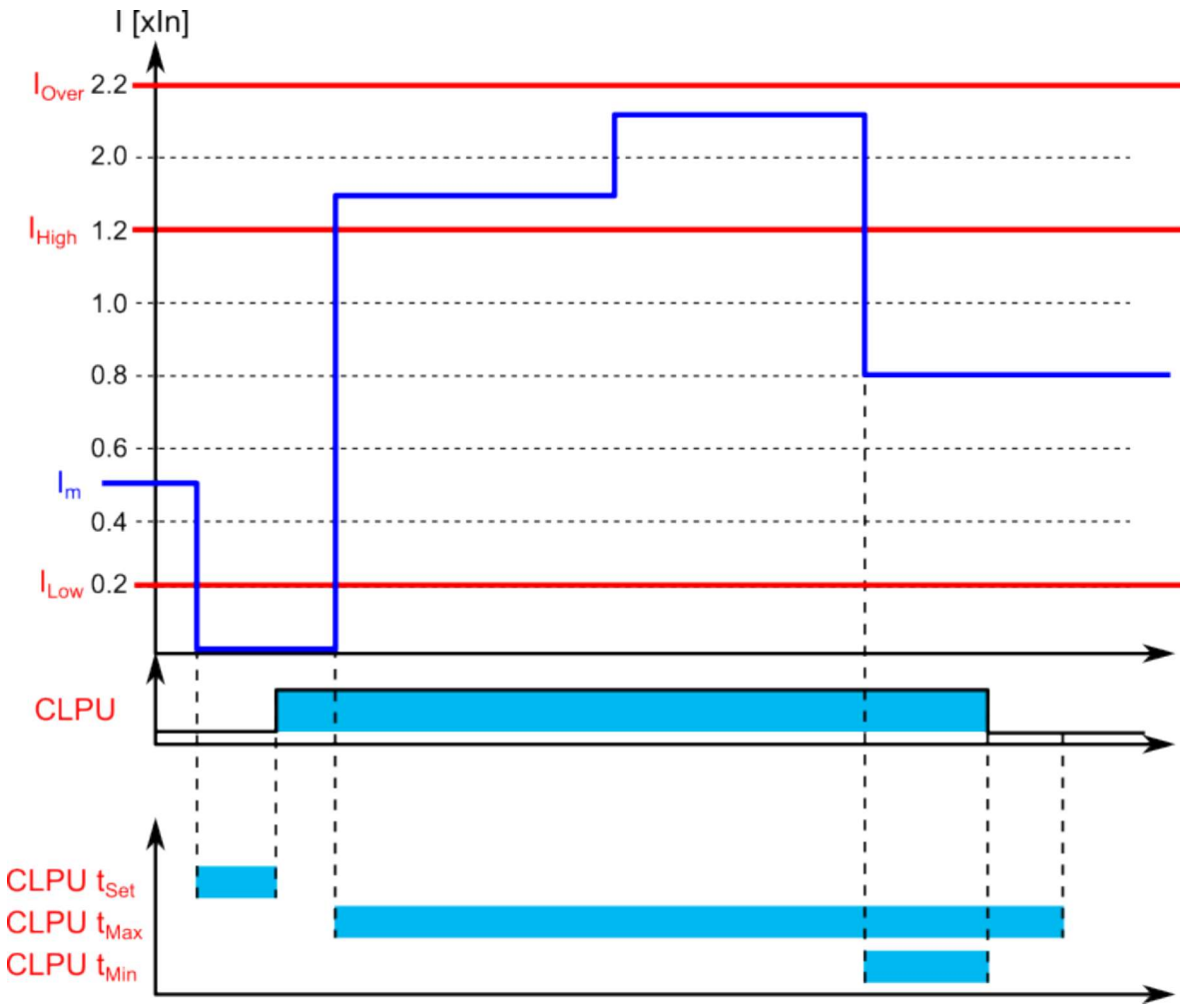

In the example above, the cold load pick-up function activates after the measured current dips below the I_{low} setting and has been there for T_{set} amount of time. When the current exceeds the I_{high} setting value, a timer starts counting towards the T_{max} time. The pick-up current is cleared before the the counter reaches the T_{max} time, when the measured current goes between of I_{low} and the I_{high}. This is when the start-up condition is considered to be over. The cold load pick-up signal can be prolonged beyond this time by setting the T_{min} to a value higher than 0.000 s.

Figure. 4.6.10 - 247. Example of timers and pick-up parameters (no cold load pick-up, I_{low} too short).

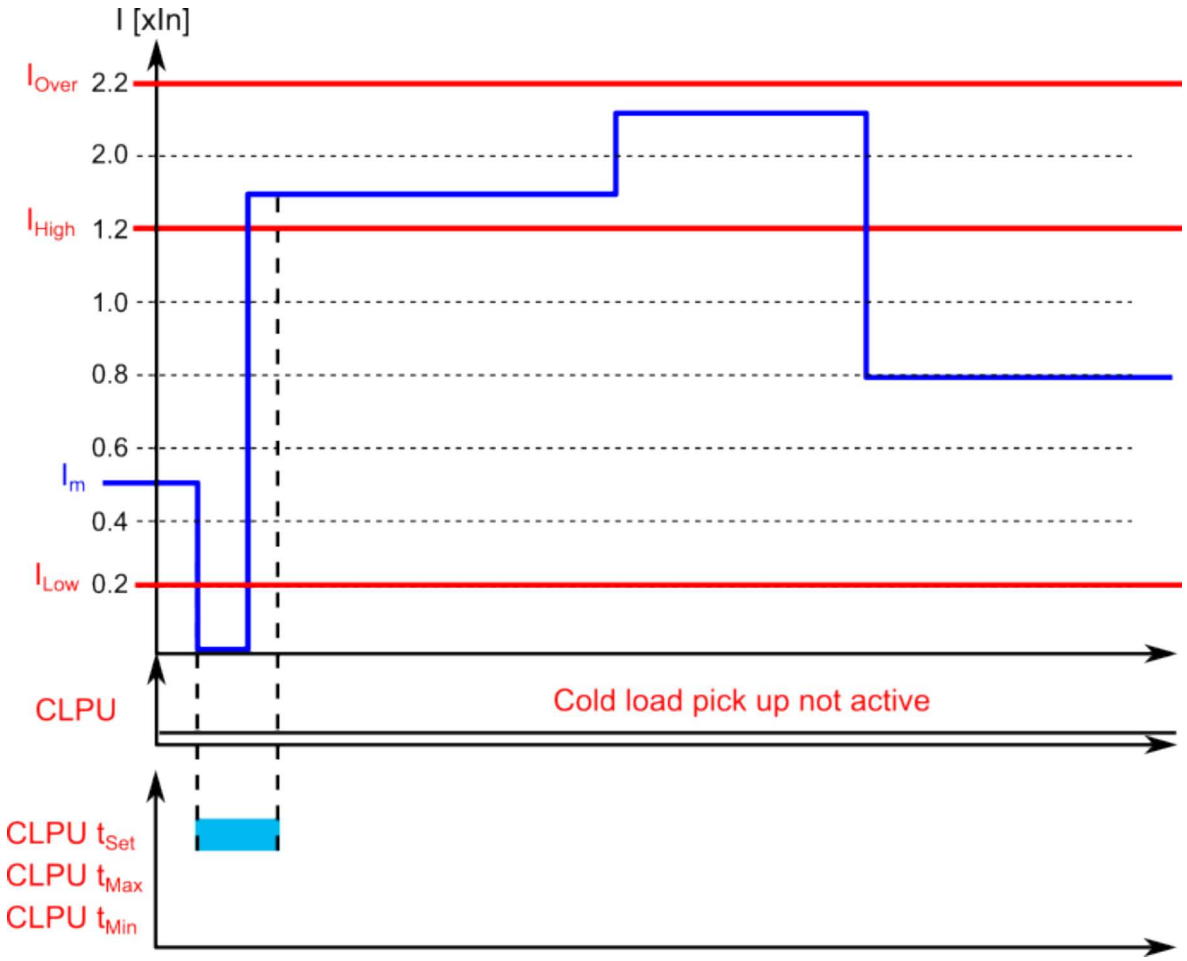

In the example above, the cold load pick-up function does not activate even when the measured current dips below the I_{low} setting, because the T_{set} is not exceeded and therefore no cold load pick-up signal is issued. If the user wants the function to activate within a shorter period of time, the T_{set} parameter can be se to a lower value. If the user wants no delay, the T_{set} can be zero seconds and the operation will be immediate.

© Arcteq Relays Ltd

Figure. 4.6.10 - 248. Example of timers and pick-up parameters (activated pick-up and instant release due to overcurrent).

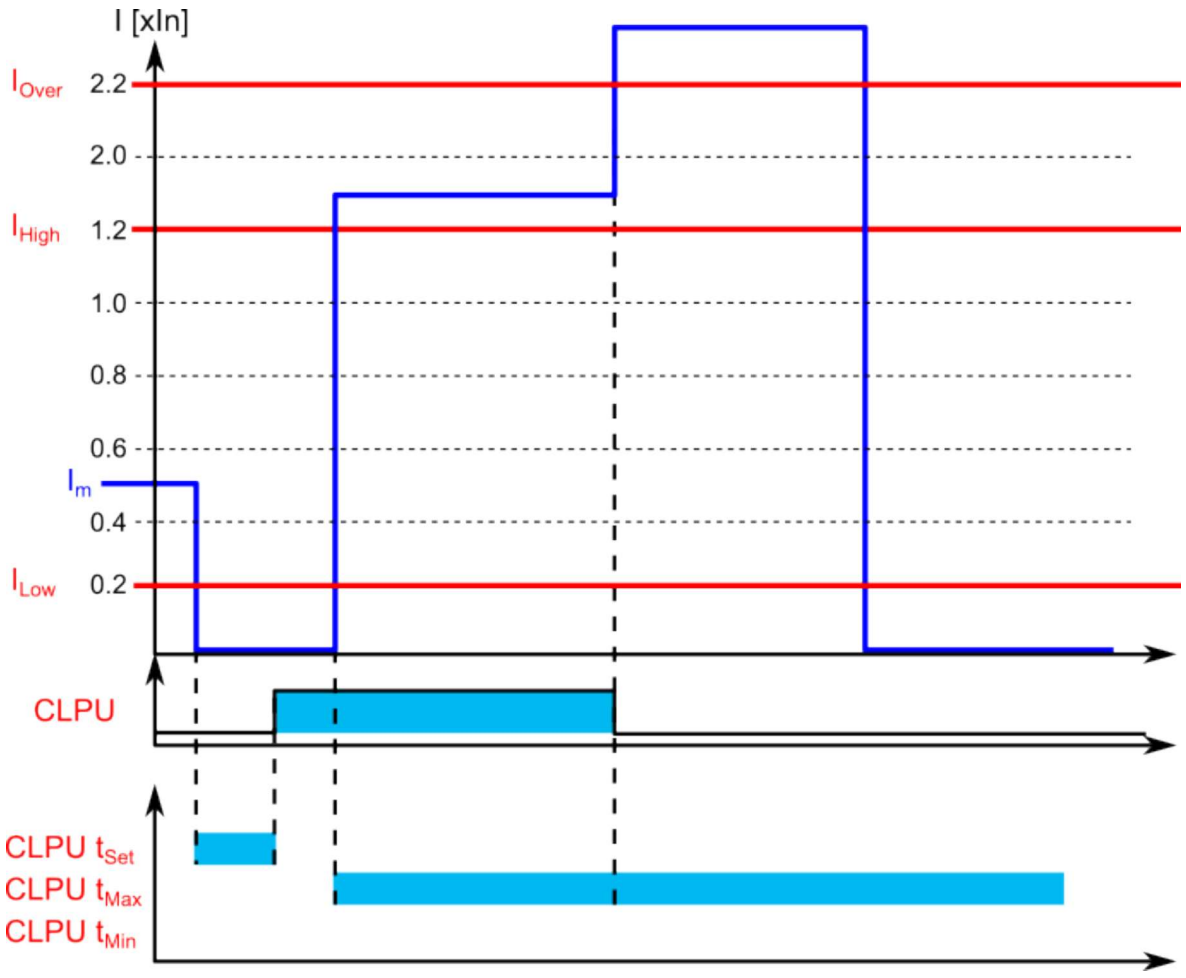

In the example above, the cold load pick-up function activates after the measured current dips below the I_{low} setting and has been there for T_{set} amount of time. When the I_m exceeds the I_{high} setting, a counter starts counting towards the T_{max} time. The measured current exceeds the I_{over} setting during the start-up situation and causes the cold load pick-up signal to be released immediately.

Figure. 4.6.10 - 249. Example of timers and pick-up parameters (activated pick-up and instant release due to too long starting).

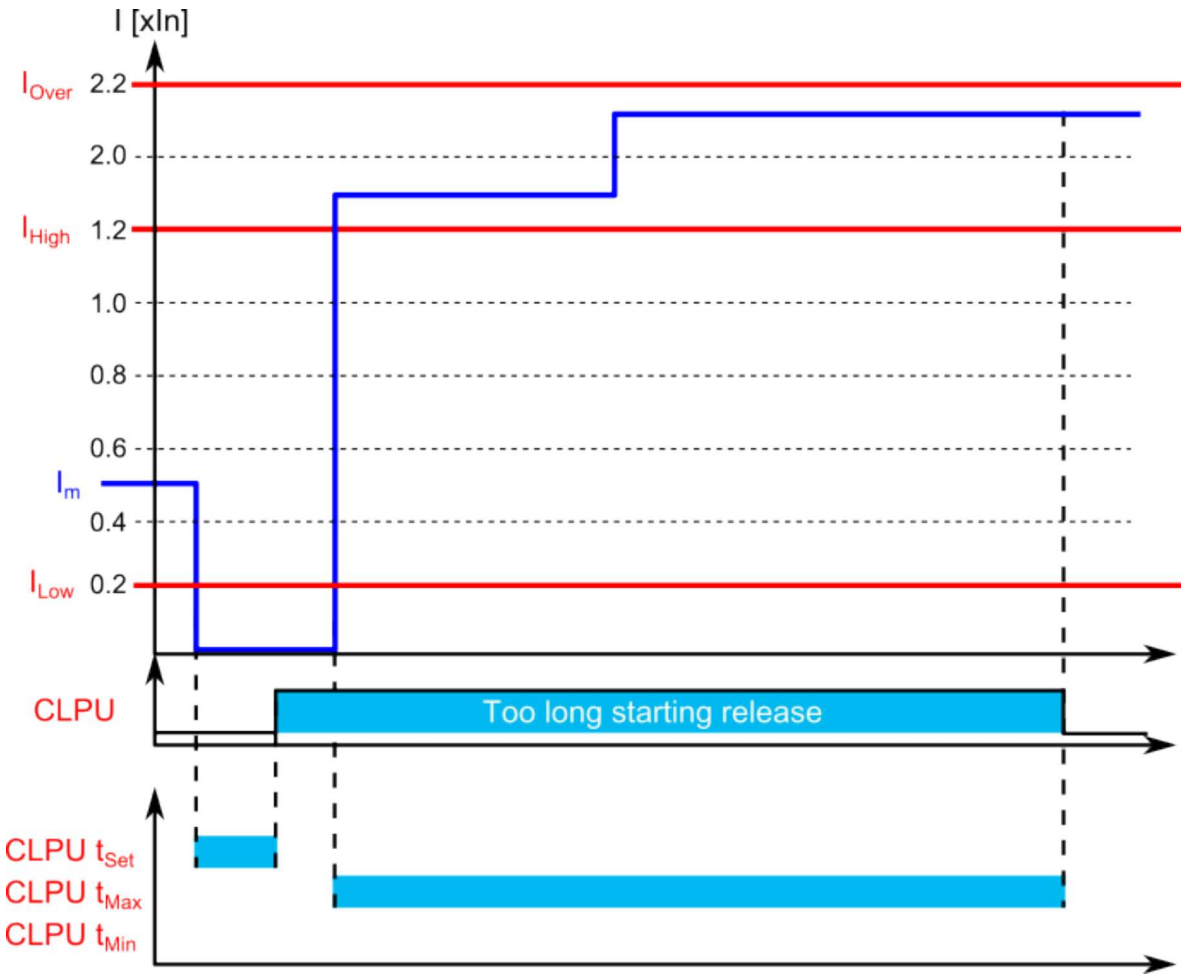

In the example above, the cold load pick-up function activates after the measured current has stayed below the I_{low} setting for a T_{set} amount of time. When the current exceeds the I_{high} setting, a timer starts counting towards the T_{max} time. The measured current stays above the I_{high} setting until the T_{max} is reached, which causes the release of the cold load pick-up signal.

© Arcteq Relays Ltd

Figure. 4.6.10 - 250. Example of timers and pick-up parameters (no inrush current detected in the starting).

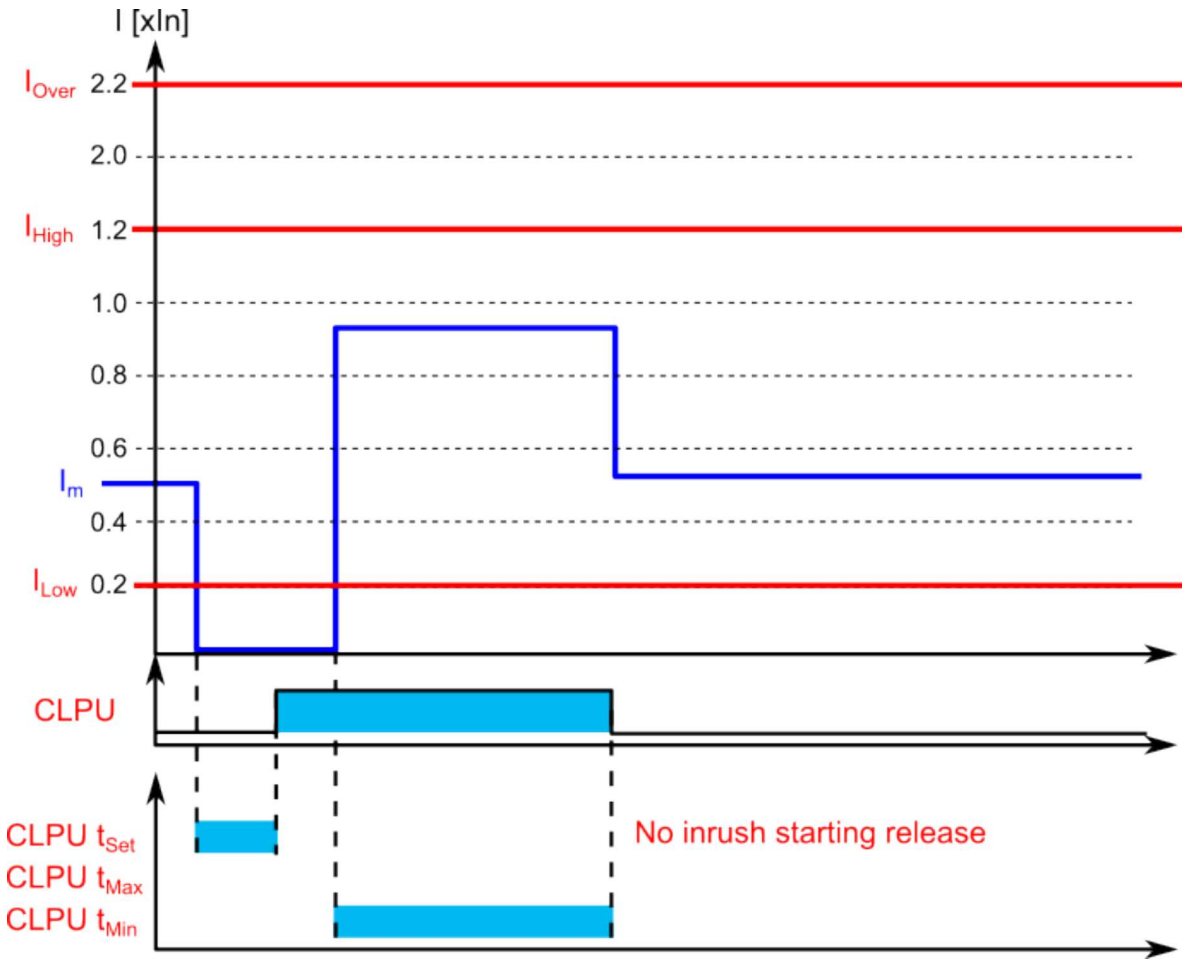

In the example above, the cold load pick-up function activates after the measured current has stayed below the I_{low} setting for a T_{set} amount of time. The current stays between the I_{low} setting and the I_{high} setting, so the cold load pick-up signal is active for T_{min} time. As no inrush current is detected during that time, the signal is released.

Figure. 4.6.10 - 251. Example of timers and pick-up parameters (an inrush current detected during T_{min} time).

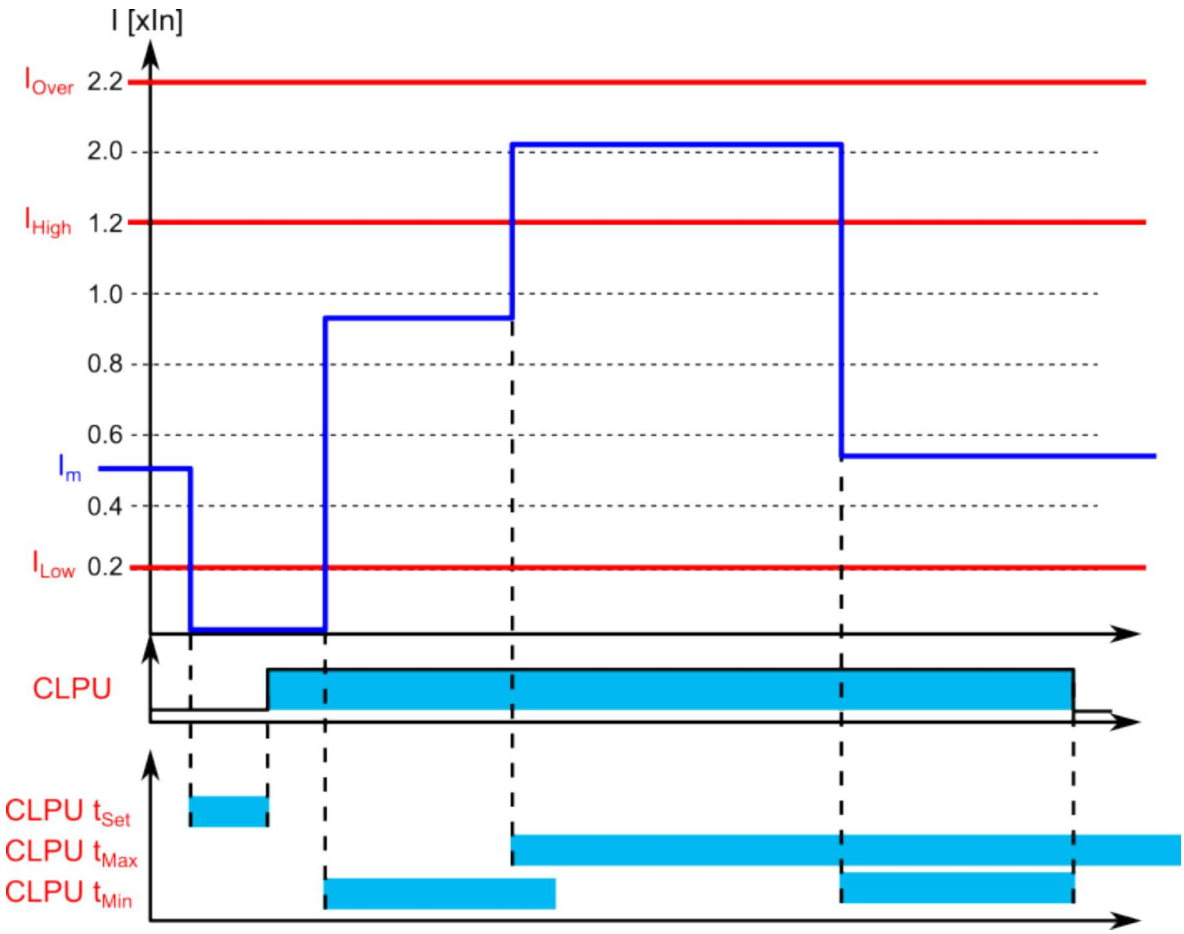

In the example above, the cold load pick-up function activates after the measured current has stayed below the I_{low} setting for a T_{set} amount of time. The current increases to between the I_{low} setting and the I_{high} setting, which causes a counter to start counting towards the T_{min} time. Before the counter reaches T_{min}, the current exceeds the I_{high} setting, which causes a counter to start counting towards the T_{max} time. The cold load pick-up signal remains active until the T_{max} has been reached, or until the start-up is over and the T_{min} time is over.

Events and registers

The cold load pick-up function (abbreviated "CLP" in event block names) generates events and registers from the status changes in the events listed below. The user can select which event messages are stored in the main event buffer: ON, OFF, or both. The events triggered by the function are recorded with a time stamp.

The function's outputs can be used for direct I/O controlling and user logic programming. The function also provides a resettable cumulative counter for the CLPU ACT and BLOCKED events.

Table. 4.6.10 - 523. Event messages.

Event block name	Event names
CLP1	LowStart ON/OFF
CLP1	HighStart ON/OFF
CLP1	LoadNormal ON/OFF

© Arcteq Relays Ltd

Event block name	Event names
CLP1	Overcurrent ON/OFF
CLP1	CLPUActivated ON/OFF
CLP1	Block ON/OFF

The function registers its operation into the last twelve (12) time-stamped registers. The register of the function records the ON event process data for ACTIVATED, BLOCKED, etc. The table below presents the structure of the function's register content.

Table. 4.6.10 - 524. Register content.

Register	Description
Date and time	dd.mm.yyyy hh:mm:ss.mss
Event	Event name
L1/L2/L3 current	Phase currents on trigger time
Time to CLPUact	Time remaining before the function is active
CLPU active time	The time the function has been active before starting
Start-up time	Recorded starting time
Releasing time of CLPU	Reclaim time counter
Setting group in use	Setting group 1...8 active

4.6.11 Switch-on-to-fault (SOTF)

The switch-on-to-fault (SOTF) function is used for speeding up the tripping when the breaker is closed towards a fault or forgotten earthing to reduce the damage in the fault location. The function can be used to control protection functions, or it can be used to directly trip a breaker if any of the connected protection functions starts during the set SOTF time. The operation of the function is instant after the conditions are met and any one signal connected to the "*Function input*" input activates.

The function can be initiated by a digital input, or by a circuit breaker "Close" command connected to the "*SOTF activate input*" input. The duration of the SOTF-armed condition can be set by the "Release time for SOTF" setting parameter; it can be changed if the application so requires through setting group selection.

Input signals

The function block does not use analog measurement inputs. Instead, its operation is based entirely on binary signal statuses.

Table. 4.6.11 - 525. Input signals.

Input	Description
Activate input	The digital input or logic signal for the function to arm and start calculating the SOTF time. Any binary signal can be used to activate the function and start the calculation. The rising edge of the signal is considered as the start of the function.

Input	Description
Block input	The input for blocking the function. Any binary signal can be used to block the function from starting.
Function input	The function input activates the function's instant trip if applied when the function is calculating the SOTF time.

Settings

The switch-on-to-fault function has one setting and it determines how long the function remains active after it has been triggered. If the inputs receive any of the set signals during this time, the function's trip is activated.

Setting group selection controls the operating characteristics of the function, i.e. the user or user-defined logic can change function parameters while the function is running.

Table. 4.6.11 - 526. Settings of the function.

Name	Range	Default	Description
SOTF LN mode	• On • Blocked • Test • Test/Blocked • Off	On	Set mode of SOF block. This parameter is visible only when *Allow setting of individual LN mode* is enabled in *General* menu.
SOTF force status to	• Normal • Blocked • Active • Trip	Normal	Force the status of the function. Visible only when *Enable stage forcing* parameter is enabled in *General* menu.
Release time for SOTF	0.000…1800.000s	1.000s	The time the function is active after triggering.

Read-only parameters

The function's *Info* page displays useful, real-time information on the state of the protection function. It is accessed either through the device's HMI display, or through the setting tool software when it is connected to the device and its Live Edit mode is active.

Table. 4.6.11 - 527. Information displayed by the function.

Name	Range	Description
SOTF LN behaviour	• On • Blocked • Test • Test/ Blocked • Off	Displays the mode of SOF block. This parameter is visible only when *Allow setting of individual LN mode* is enabled in *General* menu.
SOTF condition	• Normal • Init • Active • Trip • Blocked	Displays status of the control function.

© Arcteq Relays Ltd

Function blocking

The function can be blocked by activating the BLOCK input. This prevents the function's active time from starting.

Events and registers

The switch-on-to-fault function (abbreviated "SOF" in event block names) generates events and registers from the status changes in the events listed below. The user can select which event messages are stored in the main event buffer: ON, OFF, or both. The events triggered by the function are recorded with a time stamp.

The function's outputs can be used for direct I/O controlling and user logic programming. The function also provides a resettable cumulative counter for the INIT, BLOCKED, ACTIVE and TRIP events.

Table. 4.6.11 - 528. Event messages.

Event block name	Event names
SOF1	SOTF Init ON/OFF
SOF1	SOTF Block ON/OFF
SOF1	SOTF Active ON/OFF
SOF1	SOTF Trip ON/OFF

The function registers its operation into the last twelve (12) time-stamped registers. The register of the function records the ON process data of ACTIVATED events. The table below presents the structure of the function's register content.

Table. 4.6.11 - 529. Register content.

Register	Description
Date and time	dd.mm.yyyy hh:mm:ss.mss
Event	Event name
Used SG	Setting group 1...8 active
SOTF remaining time	The time remaining of the set release time.
SOTF been active time	The time the function has been active.

4.6.12 Vector jump (Δφ; 78)

Distribution systems may include different kinds of distributed power generation sources, such as wind farms and diesel or fuel generators. When a fault occurs in the distribution system, it is usually detected and isolated by the protection system closest to the faulty point, resulting in the electrical power system shutting dow either partially or completely. The remaining distributed generators try to deliver the power to the part of the distribution system that has been disconnected from the grid, and usually an overload condition can be expected. Under such overload conditions, it is normal to have a drop in voltage and frequency. This overload results in the final system disconnection from the islanding generator(s). The disconnection depends greatly on the ratio between the power generation and the demand of the islanded system. When any power is supplied to a load only from distributed generators, (due to the opening of the main switch), the situation is called an isolated island operation or an islanded operation of the electrical distribution network.

The vector jump control function is suitable to detect most islanding situations and to switch off the mains breaker in order to let the generator only supply loads according to their rated power value. Therefore, an overload does not cause any mechanical stress to the generator unit(s). The vector jump function should be located either on the mains side of the operated breaker or on the islanding generator side.

The vector jump function is used for instant tripping and has only one operating stage. The function has an algorithm which follows the samples of chosen measured voltages (64 samples/cycle). The reference voltage used can be all or any of the phase-to-phase or phase-to-neutral voltages.

Measured input

The function block uses phase-to-phase or phase-to-neutral voltages and always uses complex measurement from samples.

Table. 4.6.12 - 530. Measurement inputs of the vector jump function.

Signal	Description
U_1 CMPLX	The complex vector of U_1/V voltage channel
U_2 CMPLX	The complex vector of U_2/V voltage channel
U_3 CMPLX	The complex vector of U_3/V voltage channel
U_4 CMPLX	The complex vector of U_4/V voltage channel

Pick-up settings

Setting group selection controls the operating characteristics of the function, i.e. the user or user-defined logic can change function parameters while the function is running.

When a fault appears in the power system and some areas are disconnected, normally the remaining generators connected to the network must supply the area disconnected from the utility side supply. This results in an instantaneous demand of power that the generators must tackle. The excitation and the mechanical systems cannot answer such a huge demand of power quickly even if there were enough reserve power. The worst of the situation is received by the rotors of the generator units: they suffer a torsion torque that can even break the rotor and cause subsequent damage not only for the generator but for the entire power plant too.

© Arcteq Relays Ltd
IM00099

Figure. 4.6.12 - 252. Generator islanding.

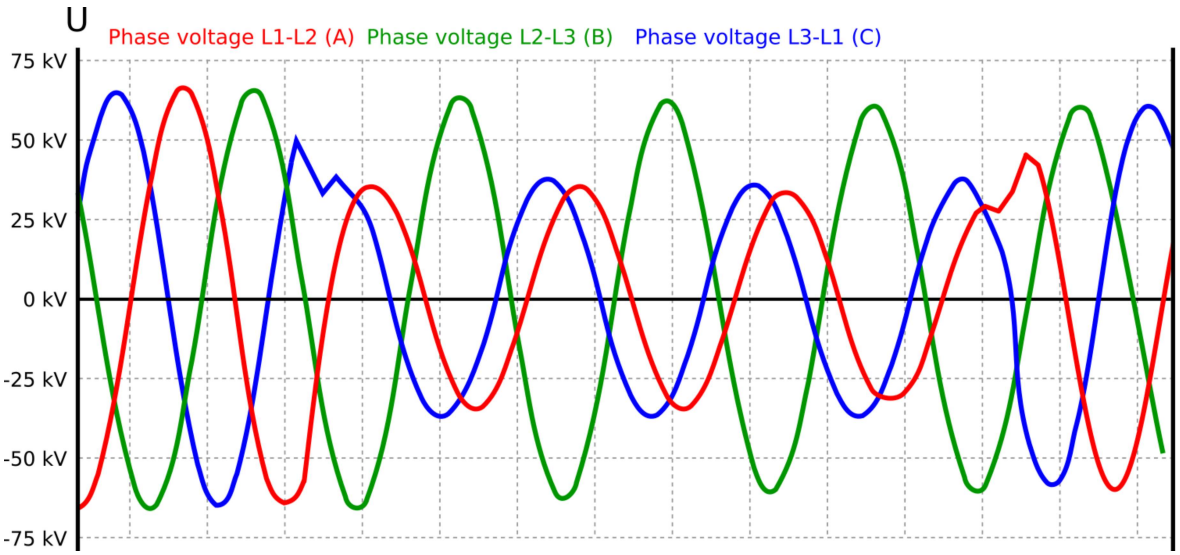

As can be seen in the example above, only phase-to-phase voltages L1-L2 and L3-L1 have been reduced, while voltage L2-L3 remains the same. This means that the problem occured in phase L1 of the network. The voltage level is not reduced to zero, nor is the voltage in any phase is totally lost. The phases without the fault condition remain normal with the same value. On the other hand, the frequency can sag as can be seen in the figure above.

The *Δα* setting parameter controls the pick-up of the vector jump function. This defines the minimum allowed rapid measured voltage angle change before action from the function. The function constantly calculates the ratio between the $\Delta\alpha_{set}$ and the measured magnitude ($\Delta\alpha_m$) for each of the selected voltages. The function's stage trip signal lasts for 20 ms and automatically resets after that time has passed. The setting value is common for all measured amplitudes.

Figure. 4.6.12 - 253. Vector jump from the function's point of view.

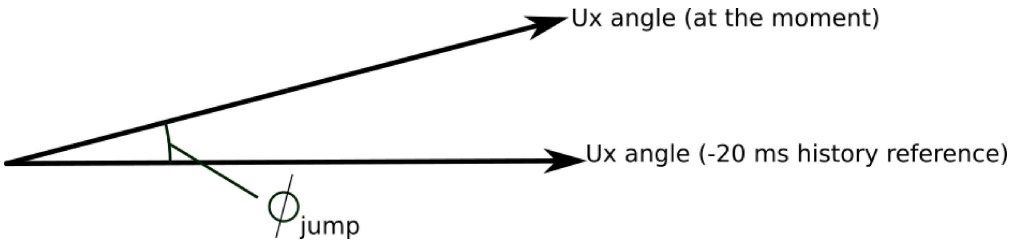

The following general settings define the general behavior of the function. These settings are static i.e. it is not possible to change them by editing the setting group.

Table. 4.6.12 - 531. General settings of the function.

Name	Range	Default	Description
Δα LN mode	• On • Blocked • Test • Test/ Blocked • Off	On	Set mode of VJP block. This parameter is visible only when *Allow setting of individual LN mode* is enabled in *General* menu.

Name	Range	Default	Description
Δα force status to	• Normal • Blocked • Trip • Alarm	Normal	Force the status of the function. Visible only when *Enable stage forcing* parameter is enabled in *General* menu.
Available stages	• Trip • Trip and alarm	Trip	Defines if alarm is included with trip or not.
Monitored voltages	• System all P-P Voltages • System any P-P Voltage • System L12 Voltage • System L23 Voltage • System L31 Voltage • System all P-E voltages • System any P-E voltage • System L1 Voltage • System L2 Voltage • System L3 Voltage • U4 Voltage	System any P-P Voltage	Defines the monitored voltage channel(s)

Table. 4.6.12 - 532. Pick-up settings.

Name	Range	Step	Default	Description
Pick-up setting Δα (lead or lag) Trip	0.05…30.00°	0.01°	5°	Pick-up setting for trip signal
Pick-up setting Δα (lead or lag) Alarm	0.05…30.00°	0.01°	5°	Pick-up setting for alarm signal
Undervoltage block limit % < Un	0.01…100.00%U_n	0.01%U_n	95%U_n	Block setting. When measured voltage is below this setting the function is blocked.

Read-only parameters

The function's *Info* page displays useful, real-time information on the state of the protection function. It is accessed either through the device's HMI display, or through the setting tool software when it is connected to the device and its Live Edit mode is active.

© Arcteq Relays Ltd

Table. 4.6.12 - 533. Information displayed by the function.

Name	Range	Step	Description
Δα > LN behaviour	• On • Blocked • Test • Test/ Blocked • Off	-	Displays the mode of UEX block. This parameter is visible only when *Allow setting of individual LN mode* is enabled in *General* menu.
Δα > condition	• Normal • Blocked • Trip • Alarm	-	Displays status of the protection function.
Voltage meas selected	• Selection Ok • Selection not available	-	Displays validity of the voltage channel(s) selected in "Monitored voltages" parameter.
Δα > U1 Angle difference	-360...360deg	0.01deg	Displays the angle difference between present time and 20 ms ago.
Δα > U2 Angle difference			
Δα > U3 Angle difference			
Δα > U1meas/ set	-360...360p.u.	0.01p.u.	Displays the ratio between the measured voltage and undervoltage block limit setting.
Δα > U2meas/ set			
Δα > U3meas/ set			

Function blocking

The blocking signal is evaluated at the start of each program cycle. The blocking signals are connected to the function's dedicated input, which can be configured in the *IO → Blocking Input Control* tab of the function.

- When the pick-up element activates and the blocking signal is not active, a ALARM or TRIP signal is generated, and the function starts or continues with the trip time countdown.
- When the pick-up element activates and the blocking signal is active, a BLOCKED signal is generated, and the function does not process the event further.
- When an ALARM or TRIP signal is already active and the blocking input signal becomes active, the signal is reset and BLOCKED signal is generated. The release time characteristics are then processed in the same way as when the pick-up signal is reset.

The blocking signal needs to reach the device minimum of 5 ms before the set operating delay has passed in order for the blocking to activate in time.

Events and registers

The vector jump function (abbreviated "VJP" in event block names) generates events and registers from the status changes in the events listed below. The user can select which event messages are stored in the main event buffer: ON, OFF, or both. The events triggered by the function are recorded with a time stamp.

The function's outputs can be used for direct I/O controlling and user logic programming. The function also provides a resettable cumulative counter for the ALARM, TRIP and BLOCKED events.

Table. 4.6.12 - 534. Event messages.

Event block name	Event names
VJP1	Block ON/OFF
VJP1	Trip ON/OFF
VJP1	Alarm ON/OFF

The function registers its operation into the last twelve (12) time-stamped registers. The register of the function records the ON event process data for ALARM, TRIP or BLOCKED. The table below presents the structure of the function's register content.

Table. 4.6.12 - 535. Register content.

Register	Description
Date and time	dd.mm.yyyy hh:mm:ss.mss
Event	Event name
Fault type	L1(2), L2(3), L3(1) and U4
Trip Δα meas / dataset	Trip angle difference
Alarm Δα meas / dataset	Alarm angle difference
Setting group in use	Setting group 1...8 active

4.6.13 Synchrocheck (ΔV/Δa/Δf; 25)

Checking the synchronization is important to ensure the safe closing of the circuit breaker between two systems. Closing the circuit breaker when the systems are not synchronized can cause several problems such as current surges which damage the interconnecting elements. The synchrocheck function has three stages: SYN1, SYN2 and SYN3. Their function and availability of these stages depend on which voltage channels are set to "SS" mode or not. Voltage measurement settings are located at *Measurements → Transformers → VT module*. When synchroswitching is used, the function automatically closes the breaker when both sides of the breaker are synchronized.

When only U3 or U4 voltage measurement channel has been set to "SS" mode:

- SYN1 – Supervises the synchronization condition between the channel set to "SS" mode and the selected system voltage (UL1, UL2, UL3, UL12, UL23 or UL31).
- SYN2 – Not active and not visible.
- SYN3 – Not active and not visible.

© Arcteq Relays Ltd
IM00099

When both U3 and U4 have been set to "SS" mode:

- SYN1 – Supervises the synchronization condition between the U3 channel and the selected system voltage (UL12, UL23 or UL31).
- SYN2 – Supervises the synchronization condition between the U4 channel and the selected system voltage (UL12, UL23 or UL31).
- SYN3 – Supervises the synchronization condition between the channels U3 and U4.

The seven images below present three different example connections and four example applications of the synchrocheck function.

Figure. 4.6.13 - 254. Example connection of the synchrocheck function (3LN+U4 mode, SYN1 in use, UL1 as reference voltage).

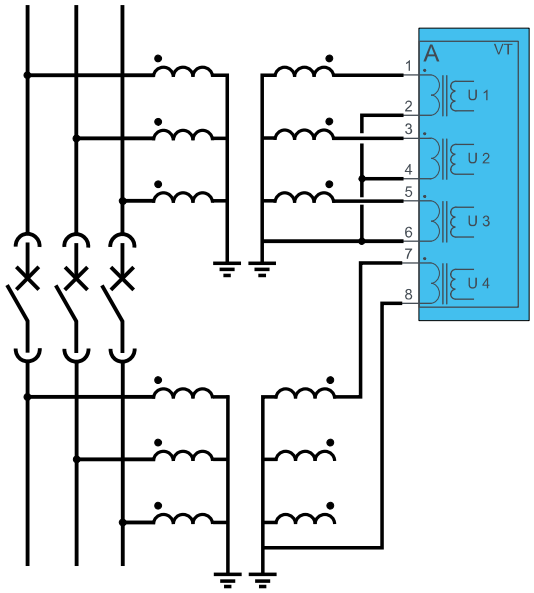

Figure. 4.6.13 - 255. Example connection of the synchrocheck function (2LL+U0+U4 mode, SYN1 in use, UL12 as reference voltage).

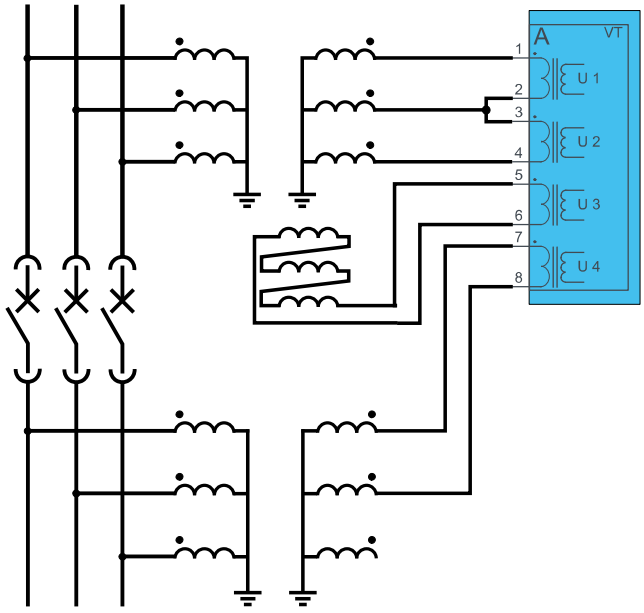

Figure. 4.6.13 - 256. Example connection of the synchrocheck function (2LL+U3+U4 mode, SYN3 in use, UL12 as reference voltage).

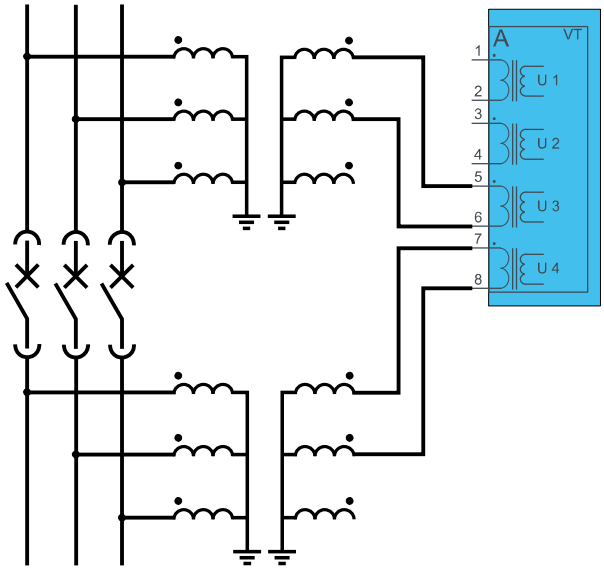

Figure. 4.6.13 - 257. Example application (synchrocheck over one breaker, with 3LL and 3LN VT connections).

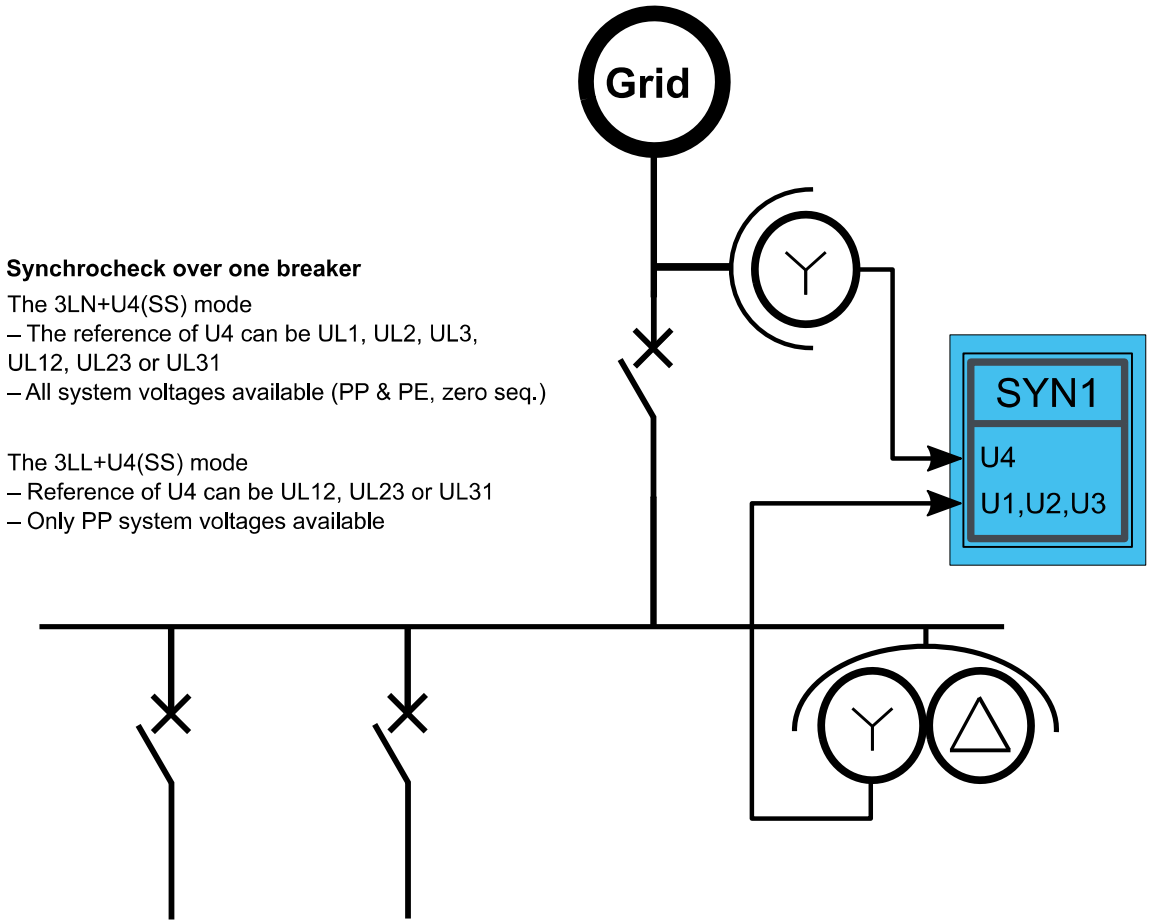

© Arcteq Relays Ltd

Figure. 4.6.13 - 258. Example application (synchrocheck over one breaker, with 2LL VT connection).

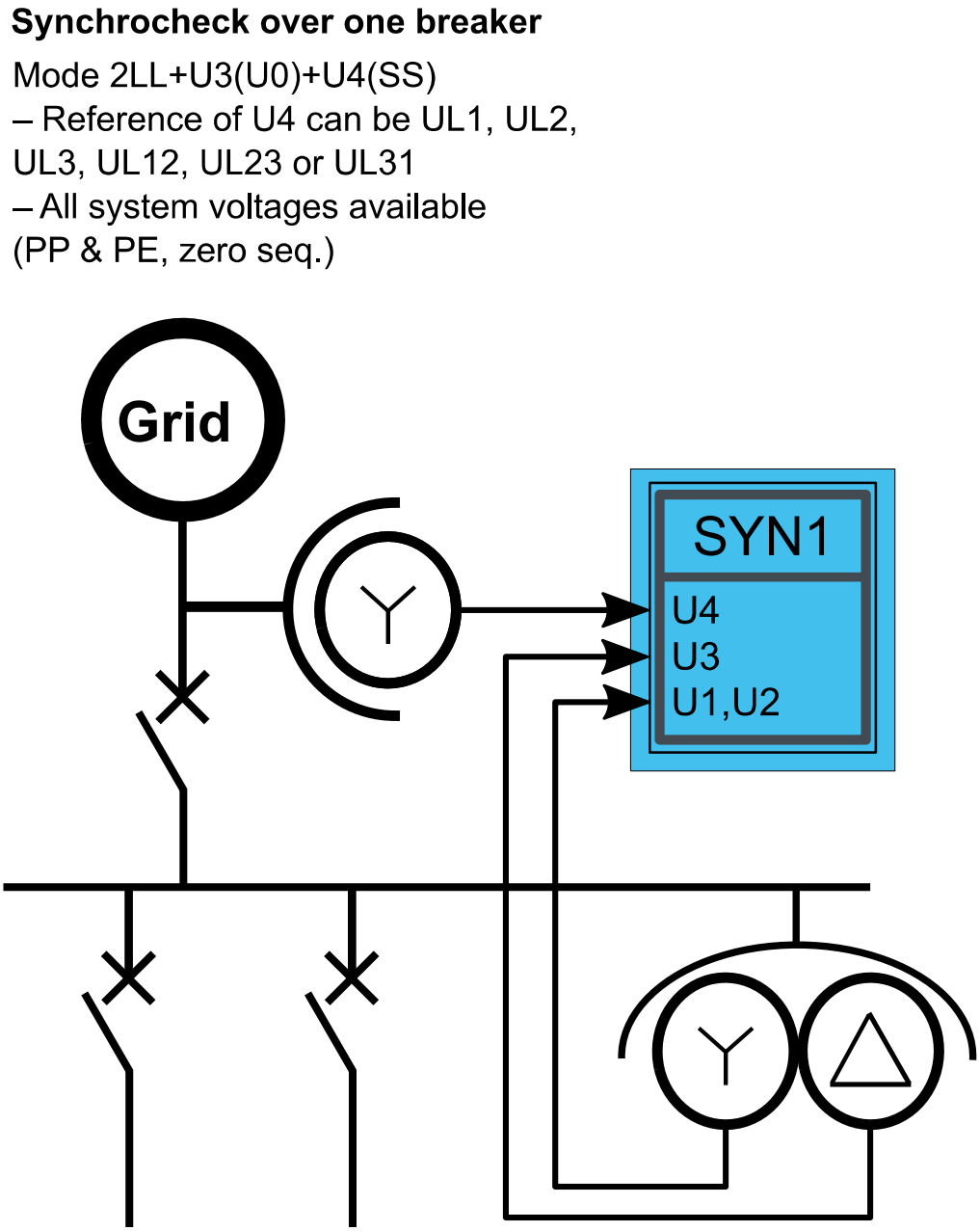

Figure. 4.6.13 - 259. Example application (synchrocheck over two breakers, with 2LL VT connection).

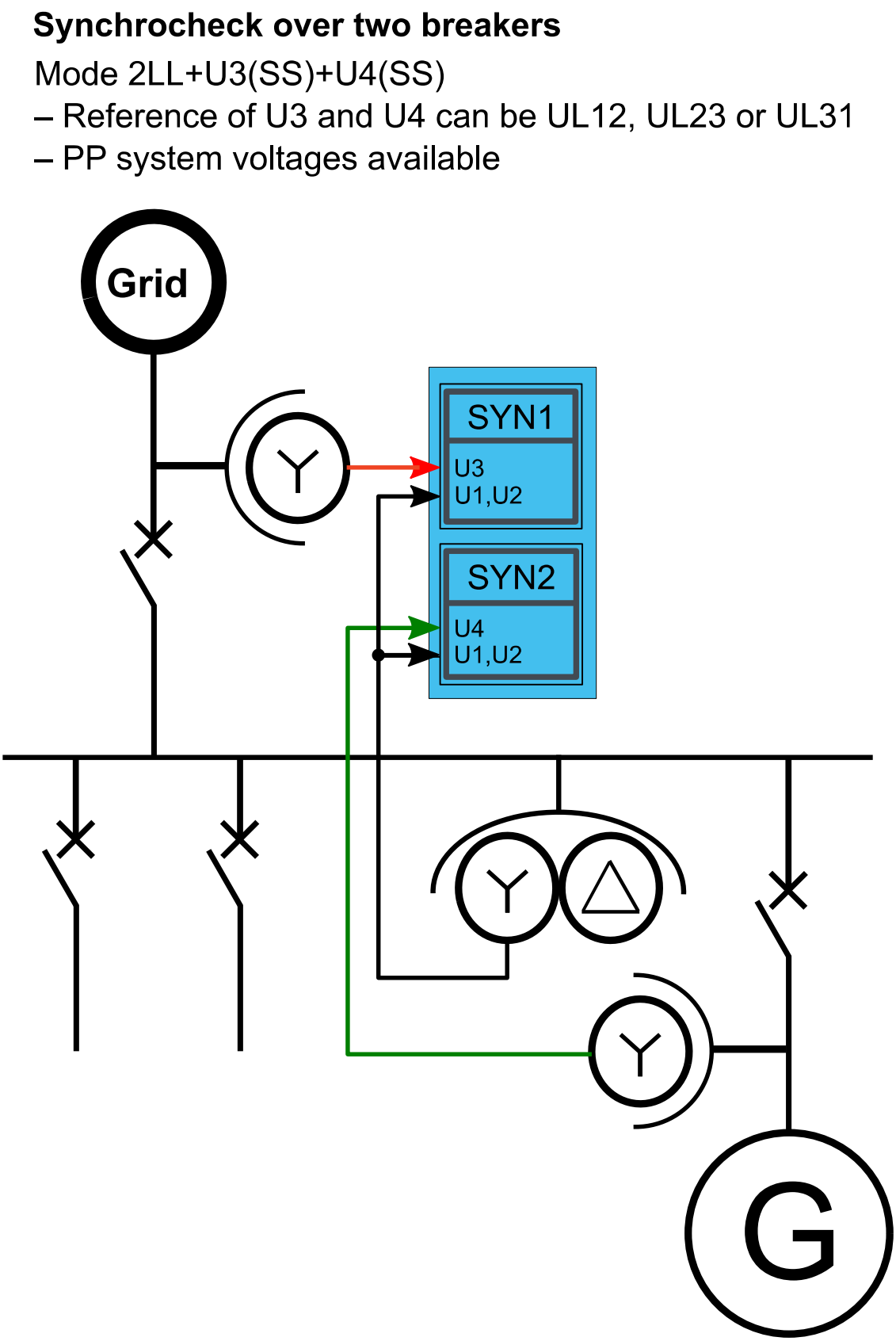

© Arcteq Relays Ltd
IM00099

Figure. 4.6.13 - 260. Example application (synchrocheck over three breakers, with 2LL+U3+U4 connection).

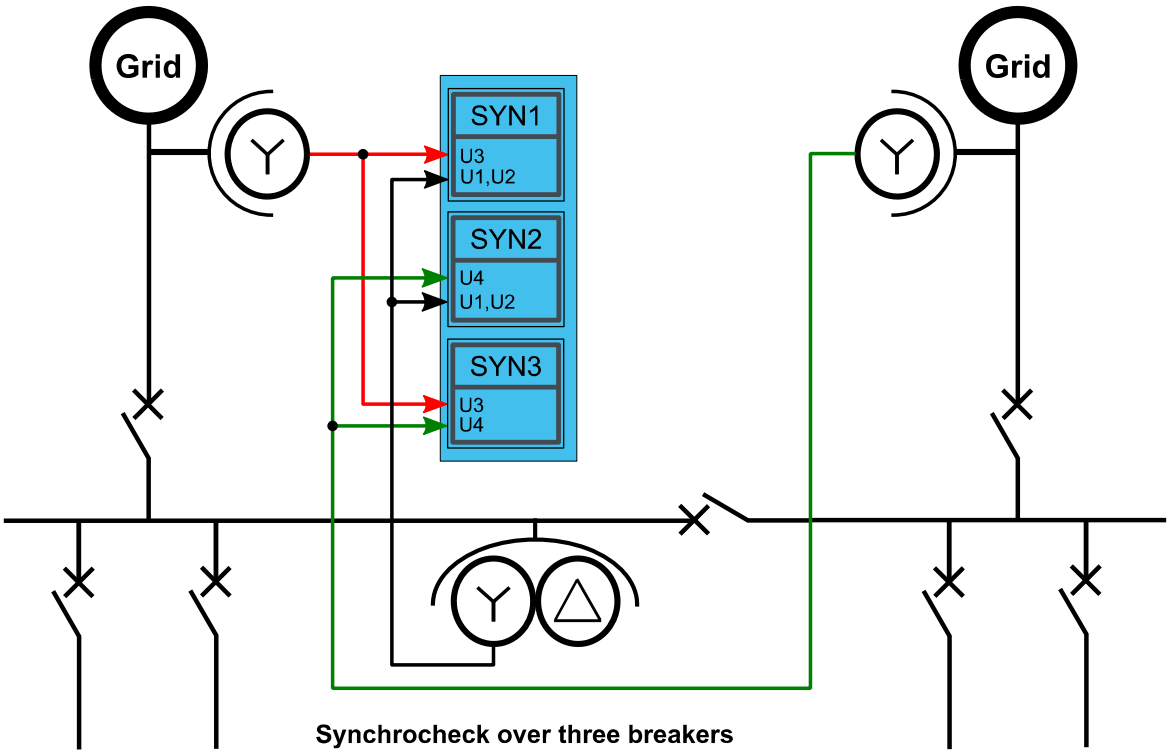

Synchrocheck over three breakers
Mode 2LL+U3(SS)+U4(SS)
– Reference of U3 and U4 can be UL12, UL23 or UL31.
U3 and U4 References must be the same
– PP system voltages available

NOTICE!
When synchrocheck is used over three breakers, SYN1 and SYN2 must have the same reference voltage.

The following aspects of the compared voltages are used in synchorization:

- voltage magnitudes
- voltage frequencies
- voltage phase angles

The two systems are synchronized when these three aspects are matched. All three cannot, of course, ever be exactly the same so the function requires the user to set the maximum difference between the measured voltages.

Depending on how the measured voltage compares to the set *U live>* and *U dead<* parameters, either system can be in a "live" or a "dead" state. The parameter *SYNx U conditions* is used to determine the conditions (in addition to the three aspects) which are required for the systems to be considered synchronized.

The image below shows the different states the systems can be in.

Figure. 4.6.13 - 261. System states.

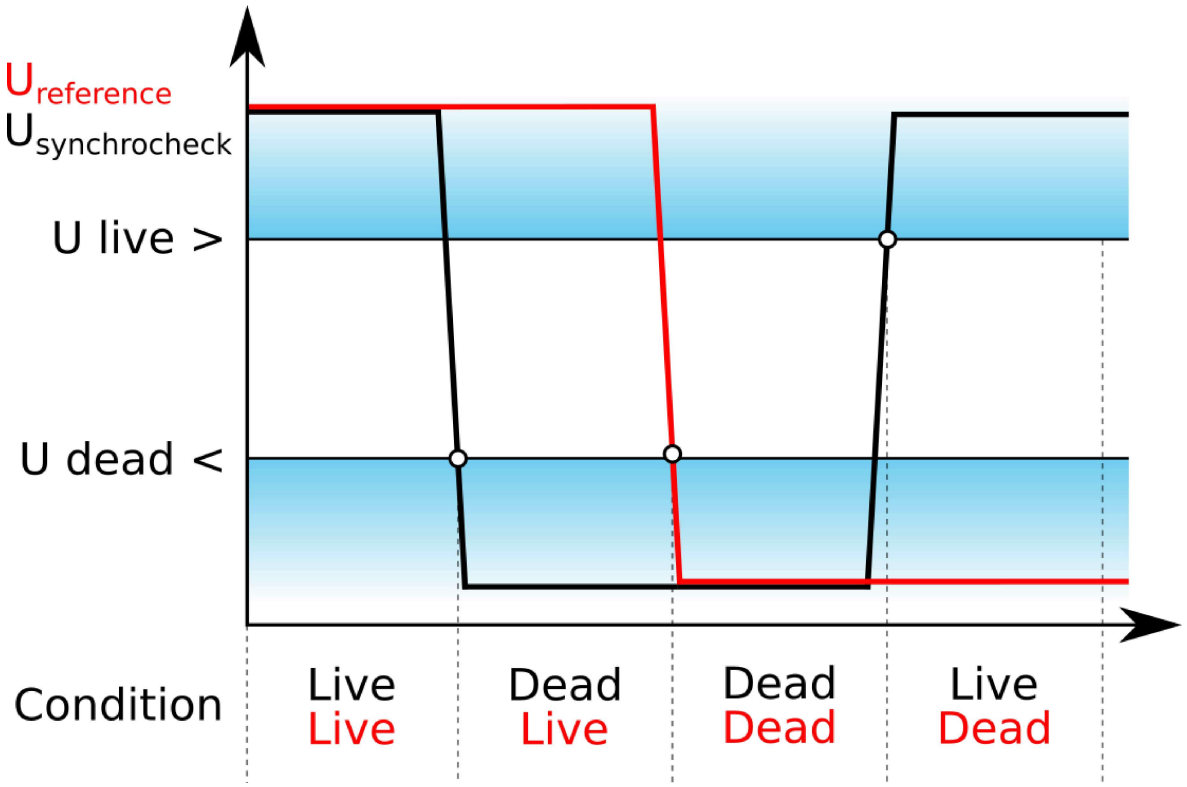

Measured input

The function block uses user selected voltage channels. The function monitors frequency, angle and fundamental frequency component value of the selected channels.

Table. 4.6.13 - 536. Measurement inputs of the synchrocheck function.

Signal	Description
U_1RMS	Fundamental frequency component of U_1/V voltage channel
U_2RMS	Fundamental frequency component of U_2/V voltage channel
U_3RMS	Fundamental frequency component of U_3/V voltage channel
U_4RMS	Fundamental frequency component of U_4/V voltage channel

Read-only parameters

The function's *Info* page displays useful, real-time information on the state of the protection function. It is accessed either through the device's HMI display, or through the setting tool software when it is connected to the device and its Live Edit mode is active.

© Arcteq Relays Ltd
IM00099

Table. 4.6.13 - 537. Information displayed by the function.

Name	Range	Step	Description
dV / da / df LN behaviour	• On • Blocked • Test • Test/ Blocked • Off	-	Displays the mode of SYN block. This parameter is visible only when *Allow setting of individual LN mode* is enabled in *General* menu.
SYN condition	• SYN1 Blocked • SYN1 Ok • SYN1 Bypass • SYN1 Vcond Ok • SYN1 Vdiff Ok • SYN1 Adiff Ok • SYN1 fdiff Ok	-	Displays status of the control function.
SYN volt status	• Dead Dead • Live Dead • Dead Live • Live Live • Undefined • Not monitored	-	Displays the voltage status of both sides.
SYN Mag diff	-120...120%Un	0.01%Un	Displays voltage difference between the two measured voltages.
SYN Ang diff	-360'...360deg	0.01deg	Displays angle difference between the two measured voltages.
SYN Freq diff	-75...75Hz	0.001Hz	Displays frequency difference between the two measured voltages.
SYN Switch status	• Still • Departing • Enclosing	-	Displays the synchroswitching status. This parameter is visible when "SYN Switching" parameter has been set to "Use SynSW".
Estimated BRK closing time	0...360s	0.005s	Estimated time left to breaker closing.
Networks rotating time	0...360s	0.005s	Estimated time how long it takes for the network to rotate fully.
Networks placement atm	-360...360deg	0.001deg	Networks placement in degrees.

Function blocking

The block signal is checked in the beginning of each program cycle. The blocking signal is received from the blocking matrix in the function's dedicated input. If the blocking signal is not activated when the synchronization is OK, a SYN OK signal is generated.

If the blocking signal is active when the SYN OK activates, a BLOCKED signal is generated and the function does not process the situation further. If the SYN OK function has been activated before the blocking signal, it resets.

Setting parameters

NOTE! Before these settings can be accessed, a voltage channel (U3 or U4) must be set into the synchrocheck mode ("SS") in the voltage transformer settings (*Measurements → VT Module*).

The general settings can be found at the synchrocheck function's *INFO* tab, while the synchrocheck stage settings can be found in the *Settings* tab (*Control → Control functions → Synchrocheck*).

Table. 4.6.13 - 538. General settings.

Name	Range	Step	Default	Description
dV / da / df LN mode	• On • Blocked • Test • Test/Blocked • Off	-	On	Set mode of SYN block. This parameter is visible only when *Allow setting of individual LN mode* is enabled in *General* menu.
SYN(1,2,3) Status Force to	• Normal • SYN1 Blocked • SYN1 Ok • SYN2 Blocked • SYN2 Ok • SYN3 Blocked • SYN3 Ok	-	Normal	Force the status of the function. Visible only when *Enable stage forcing* parameter is enabled in *General* menu.
System voltages are measured on	• Bus, Line is reference • Line, Bus is reference	-	Bus, Line is reference	Defines which voltage is the reference when determining dead/live status of voltages.
SYN OK signal behaviour	• Continuous • Delayed continuous • Delayed pulse	-	Continuous	Defines the "SYN OK" signal behaviour. When set to "Delayed continuous" there is a user defined delay before the "SYN OK" signal is activated after synchronization is achieved. When set to "Delayed pulse" the "SYN OK" signal is deactivated after user defined delay.
SYN OK delay	0.000…1800.000 s	0.005 s	0.050 s	
SYN OK pulse length	0.000…1800.000 s	0.005 s	0.050 s	
Use SYNx	• No • Yes	-	No	Activated/de-activates the individual stages (SYN1, 2, and 3) of the synchrocheck function. Activating a stage reveals the parameter settings for the configuration.
SYNx Start check	• Always • On start	-	Always	Selects synchrocheck start behaviour. If "On start" is selected "SYNx START" input must be active for synchrochecking to begin. "SYNx START" input signal can be defined at *IO → Input control* menu. If "Always" is selected "SYNx START" input is not needed for synchrochecking to start.

© Arcteq Relays Ltd

Name	Range	Step	Default	Description
SYN1 V Reference	• Not in use • UL12 • UL23 • UL31 • UL1 • UL2 • UL3	-	Not in use	Selects the reference voltage of the stage. Please note that the available references depend on the selected mode. All references available: - 3LN+U4(SS) - 2LL+U3(U0)+U4(SS) - 2LL+U3(SS)+U4(U0) Reference options 0...3 available: - 3LL+U4(SS) - 2LL+U3(Not in use)+U4(SS) - 2LL+U3(SS)+U4(Not in use)
SYN2 V Reference	• Not in use • UL12 • UL23 • UL31	-	Not in use	Selects the reference voltage of the stage. SYN2 is available when both U3 and U4 have been set to SS mode.
SYN3 V Reference	• Not in use • U3–U4	-	Not in use	Enables and disables the SYN3 stage. Operable in the 2LL+U3+U4 mode, with references UL12, UL23 and UL31 can be connected to the channels.
SYNx Switching	• Not in use • Use SynSW	-	Not in use	Disables or enables synchroswitching. Synchroswitching is available only for SYN1. When synchroswitching is used, the function automatically closes the breaker when both sides of the breaker are synchronized. This setting is only visible when "Use SYN1" is activated.
SYNx Switch bk time	0.000...1800.000s	0.005s	0.05s	Estimated time between a close command given to a breaker and the breaker entering the closed state. This setting is used to time the closing of the breaker so that both sides are as synchronized as possible when the breaker is actually closed. This setting is only visible when "SYN1 switching" is activated.
SYNx Switching object	• Object 1 • Object 2 • Object 3 • Object 4 • Object 5	-	Object 1	When synchroswitching is enabled, this parameter defines which object receives the breaker's closing command. This setting is only visible when "SYNx Switching" is activated.
Estimated BRK closing time	0.000…360.000s	0.005s	-	Displays the estimated time until networks are synchronized.
Networks rotating time	0.000…360.000s	0.005s	-	Displays the time it takes for both sides of the network to fully rotate.
Networks placement atm	-360.000…360.000deg	0.001deg	-	Indicates the angle difference between the two sides of the breaker at the moment.

Setting group selection controls the operating characteristics of the function, i.e. the user or user-defined logic can change function parameters while the function is running.

Table. 4.6.13 - 539. Synchrocheck stage settings.

Name	Range	Step	Default	Description
SYNx U conditions	• LL only • LD only • DL only • LL & LD • LL & DL • LL & DD • LL & LD & DL • LL & LD & DD • LL & DL & DD • Bypass	-	LL only	Determines the allowed states of the supervised systems. L = Live D = Dead
SYNx U live >	0.10…100.00%Un	0.01%Un	20%Un	The voltage limit of the live state.
SYNx U dead <	0.00…100.00%Un	0.01%Un	20%Un	The voltage limit of the dead state. Not in use when set to 0%Un
SYNx U diff <	2.00…50.00%Un	0.01%Un	2.00%Un	The maximum allowed voltage difference between the systems.
SYNx angle diff <	3.00…90.00deg	0.01deg	3deg	The maximum allowed angle difference between the systems.
SYNx freq diff <	0.05…0.50Hz	0.01Hz	0.1Hz	The maximum allowed frequency difference between the systems.

Events and registers

The synchrocheck function (abbreviated "SYN" in event block names) generates events and registers from the status changes in the events listed below. The user can select which event messages are stored in the main event buffer: ON, OFF, or both. The events triggered by the function are recorded with a time stamp.

The function's outputs can be used for direct I/O controlling and user logic programming.

The function offers three (3) independent stages; the events are segregated for each stage operation.

Table. 4.6.13 - 540. Event messages.

Event block name	Event names
SYN1	SYN1 Blocked ON/OFF
SYN1	SYN1 Ok ON/OFF
SYN1	SYN1 Bypass ON/OFF
SYN1	SYN1 Volt condition OK
SYN1	SYN1 Volt cond not match
SYN1	SYN1 Volt diff Ok
SYN1	SYN1 Volt diff out of setting
SYN1	SYN1 Angle diff Ok

© Arcteq Relays Ltd

Event block name	Event names
SYN1	SYN1 Angle diff out of setting
SYN1	SYN1 Frequency diff Ok
SYN1	SYN1 Frequency diff out of setting
SYNX1	SYN1 Voltage difference Ok ON/OFF
SYNX1	SYN1 Angle difference Ok ON/OFF
SYNX1	SYN1 Frequency difference Ok ON/OFF
SYNX1	SYN1 Live Live Condition ON/OFF
SYNX1	SYN1 Live Dead Condition ON/OFF
SYNX1	SYN1 Dead Live Condition ON/OFF
SYNX1	SYN1 Dead Dead Condition ON/OFF
SYNX1	SYN1 Voltage Difference too high Vbus > Vline ON/OFF
SYNX1	SYN1 Voltage Difference too high Vline > Vbus ON/OFF
SYNX1	SYN1 Frequency Difference too high fbus > fline ON/OFF
SYNX1	SYN1 Frequency Difference too high fline > fbus ON/OFF
SYNX1	SYN1 Angle Difference too high a bus leads a line ON/OFF
SYNX1	SYN1 Angle Difference too high a line leads a bus ON/OFF
SYNX1	SYN1 Bus voltage Live ON/OFF
SYNX1	SYN1 Bus voltage Dead ON/OFF
SYNX1	SYN1 Line voltage Live ON/OFF
SYNX1	SYN1 Line voltage Dead ON/OFF

The function registers its operation into the last twelve (12) time-stamped registers. The table below presents the structure of the function's register content.

Table. 4.6.13 - 541. Register content.

Name	Range
Date and time	dd.mm.yyyy hh:mm:ss.mss
Event	Event name
SYNx Ref1 voltage	The reference voltage of the selected stage.
SYNx Ref2 voltage	The reference voltage of the selected stage.
SYNx Volt Cond	The voltage condition of the selected stage.
SYNx Volt status	The voltage status of the selected stage.

Name	Range
SYNx Vdiff	The voltage difference of the selected stage.
SYNx Vdiff cond	The set condition of the voltage difference of the selected stage.
SYNx Adiff	The angle difference of the selected stage.
SYNx Adiff cond	The set condition of the angle difference of the selected stage.
SYNx fdiff	The frequency difference of the selected stage.
SYNx fdiff cond	The set condition of the frequency difference of the selected stage.
Setting group in use	Setting group 1...8 active.

4.6.14 Synchronizer (ΔV/Δa/Δf; 25)

The synchronizer function is used to automatically synchronize generators to power grids. Proper synchronizing is essential to avoid inrush currents, power system oscillations as well as thermal and mechanical stress on the generator when connecting a synchronous generator to a grid.

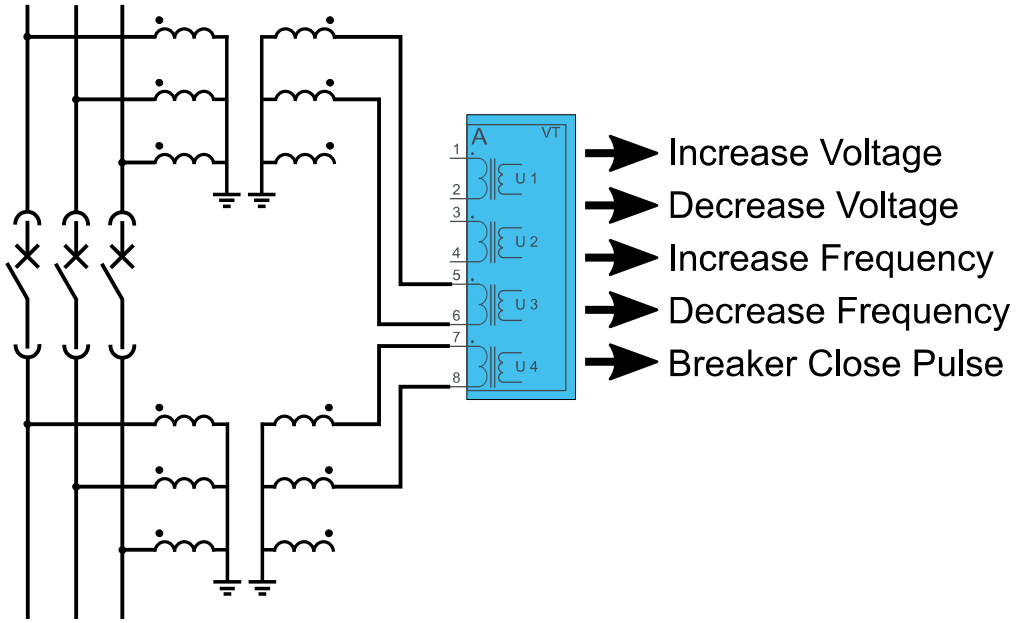

© Arcteq Relays Ltd

Figure. 4.6.14 - 262. Simplified presentation of synchronizer operation

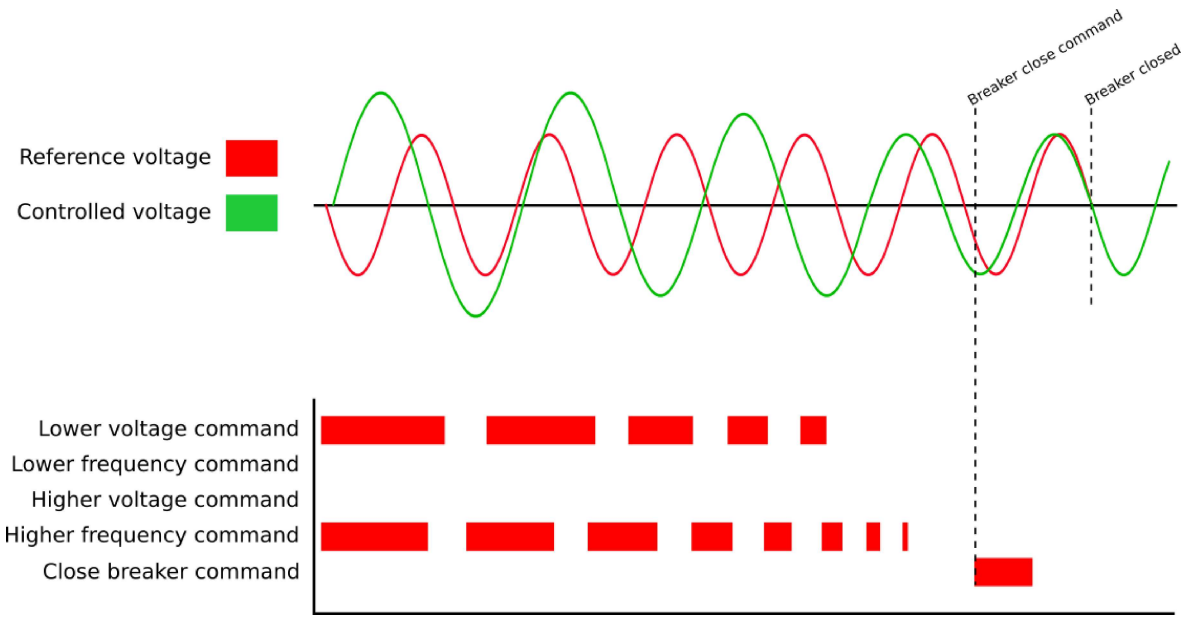

The synchronizing function uses voltage signals from each side of the circuit breaker to be closed.

- The amplitude difference between the two voltages is used to send "Increase" and "Decrease" commands to the generator's voltage regulator. The pulse length for these commands can be set, and it is automatically adjusted depending on the difference between the two measured signals.
- The frequency difference between the two voltages (the slip frequency) is used to send "Increase" and "Decrease" commands to the turbine's speed governor. The pulse length for these commands can be adjusted individually to take into account turbine governors with different speeds. The pulse length is automatically adjusted depending on the difference between the two measured signals.
- Settings can be adjusted to only allow positive slip to avoid reverse power at synchronizing.
- When the amplitude, the speed, and the phase-angle between the two voltages match (within pre-set limits), a "Close" command signal is sent to the generator's circuit breaker.

Pre-closing time can be used to allow for delay time in a circuit breaker and any auxiliary relays. The pre-closing angle is adjusted automatically depending on the slip frequency.

The outputs of the function are the following signals:

- Voltage Magnitude Difference Ok
- Voltage Frequency Difference Ok
- Voltage Angle Difference Ok
- Blocked
- Running
- Increase Voltage
- Decrease Voltage
- Increase Frequency
- Decrease Frequency
- Breaker Close Pulse
- Long Sync Time
- Nets Standstill
- Nets Departing
- Nets Enclosing

The inputs of the function are the following signals:

- Start synchronizer
- Stop synchronizer
- DeadBus synchronizing
- BlackStart synchronizing
- Block and interrupt synchronizing
- Breaker closed
- Open synchronizer HMI
- Manual increase voltage
- Manual decrease voltage
- Manual increase frequency
- Manual decrease frequency
- Manual close breaker

Measured input

The function block uses user selected voltage channels. The function monitors frequency, angle and fundamental frequency component value of the selected channels.

Table. 4.6.14 - 542. Measurement inputs of the synchronizer function.

Signal	Description
U_1RMS	Fundamental frequency component of U_1/V voltage
U_2RMS	Fundamental frequency component of U_2/V voltage
U_3RMS	Fundamental frequency component of U_3/V voltage
U_4RMS	Fundamental frequency component of U_4/V voltage

Setting and indication parameters

Table. 4.6.14 - 543. General setting and status indication parameters.

Name	Range	Step	Default	Description
Synchronizing by	• System voltages to U3/U4 input • Between U3/U4 input	-	System voltages to U3/U4 input	Determines if the voltages are synchronized between one of the system voltages and either U3 or U4 channel or if the voltage is synchronized between U3 and U4 channel. Visible if both U3 and U4 channel have been set to "SS" mode in *Measurement → VT Module (4U)* menu.
Synchronizer reference voltage input	• U3 input • U4 input	-	U4 input	Determines reference voltage. Visible if both U3 and U4 voltage channels have been set to "SS" mode in *Measurement → VT Module (4U)* menu.

© Arcteq Relays Ltd

Name	Range	Step	Default	Description
Voltage difference calculation mode	• System is reference • U3/U4 input is reference	-	System is reference	Determines if the voltage channel that has been set to "SS" mode (U3 or U4) is the reference or if one of the phase-to-phase or phase-to-neutral voltages (U_{L1}, U_{L2}, U_{L3}, U_{L12}, U_{L23}, U_{L31}) is the reference.
Synchronizer voltage reference	• UL12 • UL23 • UL31 • UL1 • UL2 • UL3	-	UL12	Determines reference voltage. Visible if "Synchronizing by" has been set to "System voltages to U3/U4".
Synchronizer measurement settings	• Meas.Conf.Incorrect • PP and PE voltages • PP Voltages	-	-	Displays used voltage: phase-to-phase voltages, phase-to-earth voltages or incorrect settings.
Synchronizer status	• Conf.Error • Idle Ready • Synchronizing • Blocked	-	-	Displays the status of the function.
Synchronizing by	• Autosynchronizer • Manual commands	-	Autosynchronizer	When set to "Manual commands" synchronizer allows manual commands given to "Manual increase voltage", "Manual decrease voltage", "Manual increase frequency" and "Manual decrease frequency inputs.
Manual switching mode	• Assisted synchroswitch • I know what I am doing	-	Assisted synchroswitch	Visible if "Synchronizing by" has been set to "Manual commands"
Synchroswitch status	• Standstill • Departing • Enclosing	-	-	Displays the status of synchroswitch.
Force control signals on	• None • Blocked On • Running On • Increase U On • Decrease U On • Increase F On • Decrease F On • CB Close On • LongSyncTime On	-	None	Visible when “Enable stage forcing” is enabled in “General” menu. Bypasses functions internal logic and forces control signals.
Enable on-screen synchronizer view	• Disabled • Enabled	-	Disabled	Enables synchronizer view in HMI.
Magnitude difference	-200.000...200.000%Un	0.001%Un	0%Un	Voltage magnitude difference between the two measured voltages.

Name	Range	Step	Default	Description
Frequency difference	-100.000...100.000Hz	0.001Hz	0Hz	Frequency difference between the two measured voltages.
Angle difference	-360.000...360.000deg	0.001deg	0deg	Angle difference between the two measured voltages.
Magnitude difference on closing BRK	-200.000...200.000%Un	0.001%Un	0%Un	Recorded difference on magnitude when breaker was closed.
Frequency difference on closing BRK	-100.000...100.000Hz	0.001Hz	0Hz	Recorded difference on frequency when breaker was closed.
Angle difference on closing BRK	-360.000...360.000deg	0.001deg	0deg	Recorded difference on angle when breaker was closed.
Estimated BRK Closing time	0.000...360.000s	0.005s	0s	Estimated time left to breaker closing.
Networks rotating time	0.000...360.000s	0.005s	0s	Estimated time how long it takes for the network to rotate fully.
Networks placement atm	-360.000...360.000deg	0.001deg	0deg	Networks placement in degrees.
Synchronizing time left	0.000...1800.000s	0.005s	0s	Time left for synchronizing from the start of synchronizing command given.
Get measurement errors for fine tuning	- Get errors	-	-	When in synchronized state, it is possible to read measurement error with this parameter.
Magnitude difference fine tune	-200.000...200.000%	0.001%	0%	Shows magnitude difference when “Get errors” command has been given. This value can then be set to “Adjustment for measurement inaccuracy or set of desired volt. Offset” to fine tune measurement.
Frequency difference fine tune	-100.000...100.000Hz	0.001Hz	0Hz	Shows frequency difference when “Get errors” command has been given. This value can then be set to “Adjustment for measurement inaccuracy or set of desired freq. offset” to fine tune measurement.
Angle difference fine tune	-360.000...360.000deg	0.001deg	0deg	Shows frequency difference when “Get errors” command has been given. This value can then be set to “Adjustment for measurement inaccuracy or set of desired angular offset” to fine tune measurement.

© Arcteq Relays Ltd

Table. 4.6.14 - 544. Synchronizing settings.

Name	Range	Step	Default	Description
Minimum voltage allowed for synchronizing	0.00…105.00 %Un	0.01 %Un	80.00 %Un	If the measured voltages are below this value, synchronizing is not allowed.
Maximum voltage allowed for synchronizing	0.00…200.00 %Un	0.01 %Un	120.00 %Un	If the measured voltages are above this value, synchronizing is not allowed.
Maximum zero voltage allowed for synchronizing (100% disabled)	0.00…100.00 %Un	0.01 %Un	5.00 %Un	If the measured zero sequence voltage is above this value, synchronizing is not allowed. If set to 100% this parameter is disabled.
Maximum allowed voltage difference	0.10...50.00%Un	0.01%Un	2.00%Un	If voltage difference between the two measured voltages are higher than determined here, synchronizing is not allowed.
Maximum allowed overfrequency difference to allow synchronizing	0.00...2.00Hz	0.01Hz	0.2Hz	If overfrequency exceeds value determined here, synchronizing is not allowed.
Maximum allowed underfrequency difference to allow synchronizing	0.00...2.00Hz	0.01Hz	0Hz	If underfrequency exceeds value determined here, synchronizing is not allowed.
Maximum time for synchronizing	0.000...1800.000s	0.005s	300.000s	If synchronizing takes longer than the value determined here, synchronizing will be cancelled.
Maximum allowed angular disposition to allow synchronizing	-25.00...25.00deg	0.01deg	10.00deg	If angle difference between the two measured voltages exceeds the value determined here, synchronizing is not allowed.
Adjustment for measurement inaccuracy or set of desired volt. offset	-95.0000...95.0000%Un	0.0001%Un	0%Un	If voltage magnitude difference is measured even in perfectly synchronized state, this parameter can be used for fine tuning the measurement. Value suggested by “Magnitude difference fine tune” can be used.
Adjustment for measurement inaccuracy or set of desired angular offset	-60.0000...60.0000deg	0.0001deg	0deg	If frequency difference is measured even in perfectly synchronized state, this parameter can be used for fine tuning the measurement. Value recommended by “Angle difference fine tune” can be used.

Name	Range	Step	Default	Description
Adjustment for measurement inaccuracy or set of desired freq. offset	-0.5000...2.0000Hz	0.0001Hz	-0.1000Hz	If angle difference is measured even in perfectly synchronized state, this parameter can be used for fine tuning the measurement. Value suggested by “Frequency difference fine tune” can be used.
Voltage adjustment slope	0.00...25.00%/s	0.01%/s	0.20%/s	Speed of voltage adjustment. Lower value is slower and higher is faster. Depends on used excitation device and its settings.
Volt. Max. adjustment pulse length	0.000...1800.000s	0.005s	3.000s	Maximum time voltage adjustment pulse is allowed to be active.
Volt. Min. adjustment pulse length	0.000...1800.000s	0.005s	0.100s	Minimum time voltage adjustment pulse is allowed to be active.
Volt. Min. Resting time between pulses	0.000...1800.000s	0.005s	2.500s	Minimum time between each voltage adjustment pulse.
Freq. Max. adjustment pulse length	0.000...1800.000s	0.005s	3.000s	Maximum time frequency adjustment pulse is allowed to be active.
Freq. Min. adjustment pulse length	0.000...1800.000s	0.005s	0.100s	Minimum time frequency adjustment pulse is allowed to be active.
Freq. Min. Resting time between pulses	0.000...1800.000s	0.005s	2.500s	Minimum time between each frequency adjustment pulse.
Frequency adjustment slope when increasing	0.00...10.00Hz/s	0.01Hz/s	0.10Hz/s	Determines how many Hz per second frequency increases with frequency increasing command.
Frequency adjustment slope when decreasing	-10.00...0.00Hz/s	0.01Hz/s	-0.10Hz/s	Determines how many Hz per second frequency decreases with frequency decreasing command.
Circuit breaker pre-closing time incl auxiliary relays	0.000...1800.000s	0.005s	0.100s	Estimated delay from close signal initiation to breaker actually reaching full closed state including aux contacts.
Lenght of circuit breaker closing pulse	0.000...1800.000s	0.005s	0.250s	Breaker close pulse lenght.
Multiple On pulses	• Single On pulse • Multiple pulses	-	Single On pulse	Selection whether the synchronizer tries to synchronize and close breaker for the full given maximum time with multiple tries or in case if the first attempt fails also synchronizing sequence is disrupted.

© Arcteq Relays Ltd

Table. 4.6.14 - 545. Synchronizer internal parameters.

Name	Range	Step	Default	Description
Maximum allowed voltage difference to start synchronizing	0.00...50.00%Un	0.01%Un	20.00%Un	Maximum voltage difference on sides of the synchronizing breaker. If the difference is too high, synchronizing sequence is not starting.
Block voltage up commands over	0.00...50.00%Un	0.01%Un	20.00%Un	Blocking of the controlled side voltage maximum value.
Block voltage down commands under	-50.00...50.00%Un	0.01%Un	-20.00%Un	Blocking of the controlled side voltage minimum value.
Integrator sum when voltage adjustment pulse is generated	0.00...50.00%	0.01%	10.00%	Controls the given raise/lower pulse rate for the voltage control pulses. Lower value gives pulses more frequently. Setting depends on the used voltage regulator and its settings.
Voltage adjustment pulse length constant	0.00...5000.00	0.01	1000.00	Base value for voltage pulse length.
Maximum allowed frequency difference to start synchronizing	0.00...25.00Hz	0.01Hz	5.00Hz	Maximum frequency difference on sides of the synchronizing breaker.
Integrator sum when frequency adjustment pulse is generated	0.00...50.00Hz	0.01Hz	1.00Hz	Controls the given raise/lower pulse rate for the frequency control pulses. Lower value gives pulses more frequently. Setting depends on the used application and its properties.
Frequency adjustment pulse length constant	0.00...5000.00	0.01	1000.00	Base value for frequency pulse length.
Filter time for angle derivative	0.000...1800.000s	0.005s	1.000s	Angle estimation fine tuning, higher value gives more accurate result but may lead to longer synchronizing total time.
Circuit breaker pre-closing adjustment constant	0.00...10.00	0.01	0.10	Fine tuning of the synchroswitch function for the breaker close command.

Function blocking

The block signal is checked in the beginning of each program cycle. The blocking signal is received from the blocking matrix in the function's dedicated input. If the blocking signal is not activated when the pick-up element activates, a BREAKER CLOSE PULSE signal is generated and the function proceeds to the time characteristics calculation.

If the blocking signal is active when the pick-up element activates, a BLOCKED signal is generated and the function does not process the situation further.

The variables the user can set are binary signals from the system. The blocking signal needs to reach the device minimum of 5 ms before the set operating delay has passed in order for the blocking to activate in time.

Events

The synchronizing function (abbreviated "GSYN" in event block names) generates events and registers from the status changes in the events listed below. The user can select which event messages are stored in the main event buffer: ON, OFF, or both. The events triggered by the function are recorded with a time stamp.

The function's output signals can be used for direct I/O controlling and user logic programming.

Table. 4.6.14 - 546. Event messages.

Event block name	Event names
GSYN	Synchronizing Blocked ON/OFF
GSYN	Synchronizing Running ON/OFF
GSYN	Synchr. Increase Voltage ON/OFF
GSYN	Synchr. Decrease Voltage ON/OFF
GSYN	Synchr. Increase Frequency ON/OFF
GSYN	Synchr. Decrease Frequency ON/OFF
GSYN	Synchronizer BRK Close ON/OFF
GSYN	Synchronizer Long Sync. Time ON/OFF
GSYN	Synchroswitch Close fail Re-init ON/OFF
GSYN	Synchroswitching requested ON/OFF
GSYN	Voltage Mag.Difference Ok/Not Ok
GSYN	Voltage Freq.Difference Ok/Not Ok
GSYN	Voltage Ang.Difference Ok/Not Ok
GSYN	Nets Standstill ON/OFF
GSYN	Nets Departing ON/OFF
GSYN	Nets Enclosing ON/OFF

4.6.15 Milliampere output control

The milliamp current loop is the prevailing process control signal in many industries. It is an ideal method of transferring process information because a current does not change as it travels from a transmitter to a receiver. It is also much more simple and cost-effective.

The benefits of 4...20 mA loops:

- the dominant standard in many industries
- the simplest option to connect and configure
- uses less wiring and connections than other signals, thus greatly reducing initial setup costs
- good for travelling long distances, as current does not degrade over long connections like voltage does
- less sensitive to background electrical noise

© Arcteq Relays Ltd
IM00099

- detects a fault in the system incredibly easily since 4 mA is equal to 0 % output.

Milliampere (mA) outputs

The device supports up to two (2) independent mA option cards. Each card has four (4) mA output channels and one (1) mA input channel. If the device has an mA option card, enable mA outputs at *Control → Device IO → mA outputs*. The outputs are activated in groups of two: channels 1 and 2 are activated together, as are channels 3 and 4.

Table. 4.6.15 - 547. Main settings (output channels).

Name		Range	Default	Description
mA option card 1	Enable mA output channels 1 and 2	• Disabled • Enabled	Disabled	Enables and disables the outputs of the mA output card 1.
	Enable mA output channels 3 and 4			
mA option card 2	Enable mA output channels 5 and 6	• Disabled • Enabled	Disabled	Enables and disables the outputs of the mA output card 2.
	Enable mA output channels 7 and 8			

Table. 4.6.15 - 548. Settings for mA output channels.

Name	Range	Step	Default	Description
Enable mA output channel	• Disabled • Enabled	-	Disabled	Enables and disables the selected mA output channel. If the channel is disabled, the channel settings are hidden.
Magnitude selection for mA output channel	• Currents • Voltages • Powers • Impedance and admittance • Other	-	Currents	Defines the measurement category that is used for mA output control.
Magnitude of mA output channel	(dependent on the measurement category selection)	-	(dependent on the measurement category selection)	Defines the measurement magnitude used for mA output control. The available measurements depend on the selection of the "Magnitude selection for mA output channel" parameter.
Input value 1	$-10^7 \ldots 10^7$	0.001	0	The first input point in the mA output control curve.
Scaled mA output value 1	0.0000…24.0000mA	0.0001mA	0mA	The mA output value when the measured value is equal to or less than Input value 1.
Input value 2	$-10^7 \ldots 10^7$	0.001	1	The second input point in the mA output control curve.
Scaled mA output value 2	0.0000…24.0000mA	0.0001mA	0mA	The mA output value when the measured value is equal to or greater than Input value 2.

Figure. 4.6.15 - 263. Example of the effects of mA output channel settings.

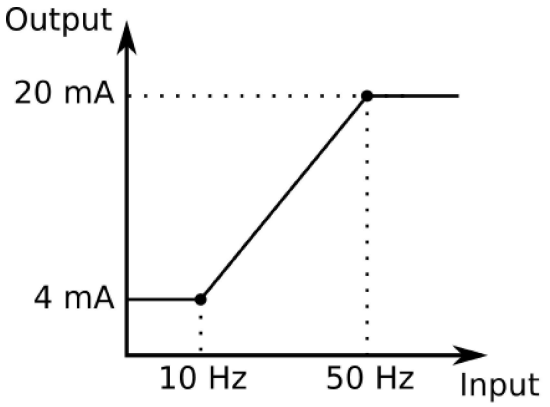

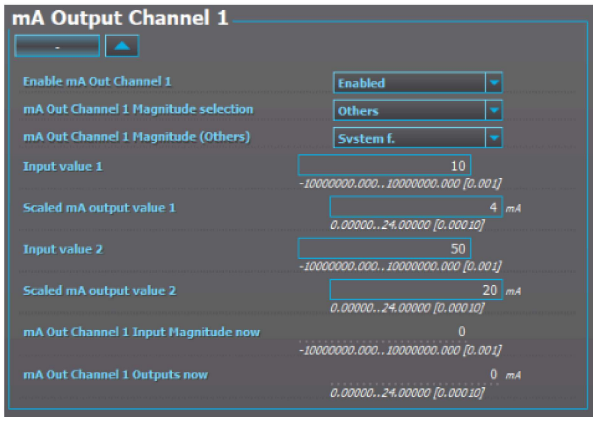

Table. 4.6.15 - 549. Hardware indications.

Name	Range	Description
Hardware in mA output channels 1...4	• None • Slot A • Slot B • Slot C • Slot D • Slot E • Slot F • Slot G • Slot H • Slot I • Slot J • Slot K • Slot L • Slot M • Slot N • Too many cards installed	Indicates the option card slot where the mA output card is located.
Hardware in mA output channels 5...8		

Table. 4.6.15 - 550. Measurement values reported by mA output cards.

Name	Range	Step	Description
mA in Channel 1	0.0000…24.0000mA	0.0001mA	Displays the measured mA value of the selected input channel.
mA in Channel 2			
mA Out Channel Input Magnitude now	$-10^7 \ldots 10^7$	0.001	Displays the input value of the selected mA output channel at that moment.
mA Out Channel Outputs now	0.0000…24.0000mA	0.0001mA	Displays the output value of the selected mA output channel at that moment.

4.6.16 Power factor controller (90PF)

The power factor controller (90PF), or the PFC, is the control unit of an automatic capacitor bank system. It performs the switching of capacitors to reach a user-defined target cos φ. With the integration of a power factor controller, it is possible to optimize processes, to speed up troubleshooting, and to reduce costs of the supervised systems.

© Arcteq Relays Ltd

The power factor controller permanently monitors the reactive power of the installation and controls the power factor. The controlling is done by connecting and disconnecting the power capacitor banks. When the power factor decreases, the controller activates the capacitors sequentially. The controller will continue to add capacitors in parallel to the load until a sufficient value of the power factor is attained.

In power factor correction, the power factor (represented as "k") is the ratio of the active power (kilowatts) divided by the reactive power (kilovars). The power factor value is between 0.0 and 1.00. If the power factor is above 0.8, the device is using power efficiently. A standard power supply has a power factor of 0.70-0.75, and a power supply with PFC has a power factor of 0.95-0.99.

In addition to power factor correction, it possible to indicate current, voltage, power, frequency, and other values. The capacitor bank protection relay AQ-C255x operates like the brain of the power correction system (see the figure below).

Figure. 4.6.16 - 264. Power factor controller configuration for up to five capacitor banks.

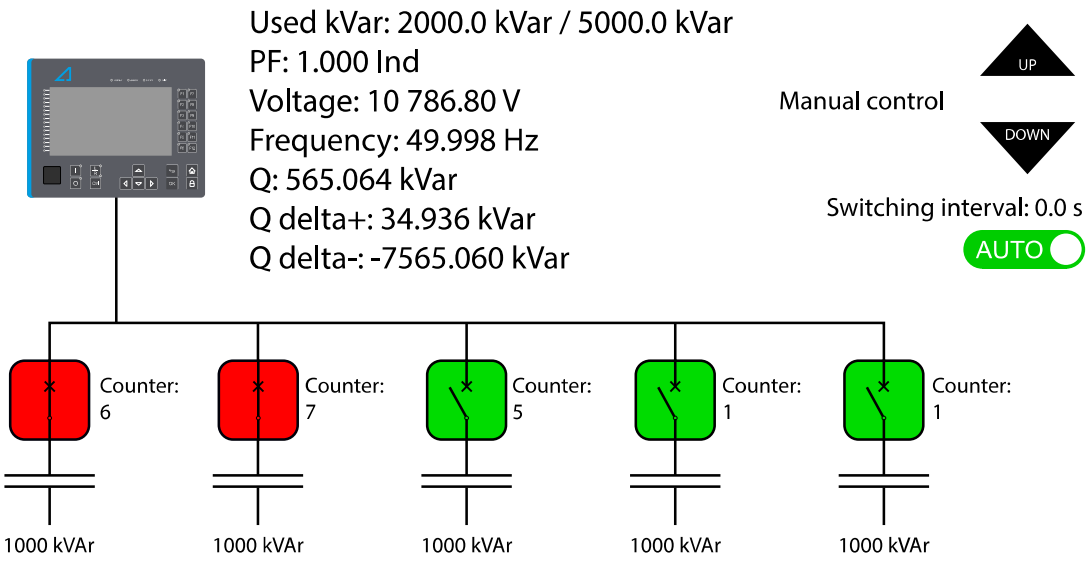

The power factor controller has various benefits:

- Controls 1...5 capacitor banks.
- Can be installed very simply.
- Has a controllable color mimic with active feedback.
- Has both automatic and manual modes.
- Can operate while one or more capacitor banks are under maintenance.
- Has an adjustable frequency range, without a harmonics effect.
- Has a wide range of communication options and controllable alarms.

Bank connection modes

FIFO (First In First Out)

The First In First Out (FIFO) mode connects capacitor banks in order from left to right and removes them in the same order starting from the left. In the example below, this would mean Bank 1, Object 1.

Figure. 4.6.16 - 265. First in first out (FIFO).

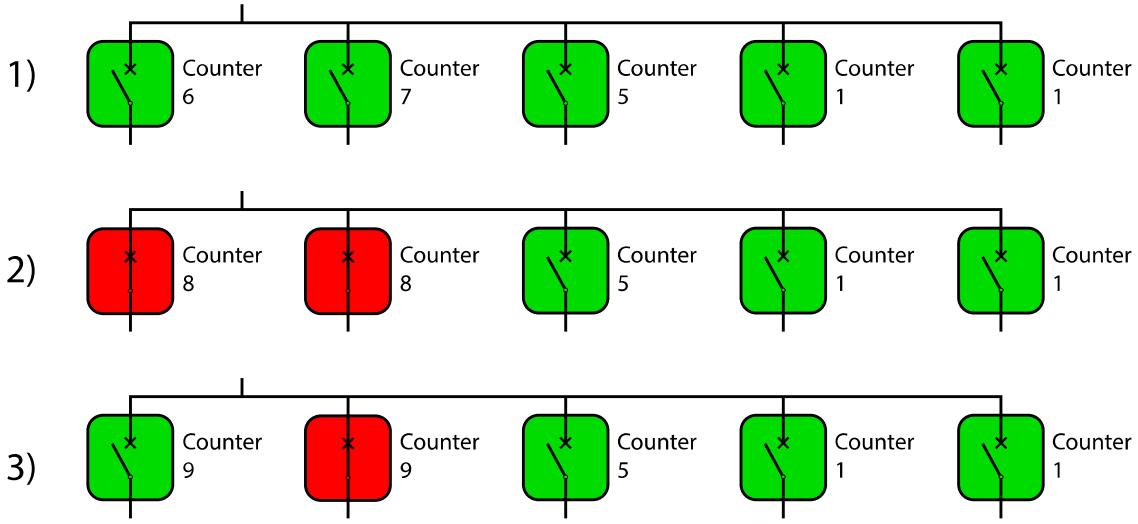

1. All banks are disconnected and objects are in the open state.
2. The first bank to be closed in FIFO Mode is Bank 1, while Bank 2 comes second.
3. The first bank to be removed is the first bank on the left (Bank 1).
4. Step 4 would be to connect Bank 1 again after the discharge time has passed. If the switch interval time of Bank 1 is still on-going and a command to close another bank is at hand, Bank 3 would be closed instead.

Connect banks based on the counter values

If the least used bank should be connected each time, set the connected banks based on the counter values as "Yes". This setting is available and visible in the configuration software under the PFC funtion's *Info* tab once the FIFO mode is selected. Counter values can be cleared or set manually if needed.

FILO (First In Last Out)

The First In Last Out (FILO) mode connects capacitor banks in order from left to right, and removes them in reverse order starting from the last on the right. When it comes to the switch interval time and operation during bank discharging, the same rules apply as with FIFO Mode (described above).

Inputs and outputs

The following list presents all the input control parameters for the PFC function:

- PFC manual – binary input
- PFC auto – binary input
- PFC power factor control – binary input
- PFC voltage control – binary input
- PFC deltaQ control – binary input
- Input for out of service (Bank 1)
- Input for out of service (Bank 2)
- Input for out of service (Bank 3)
- Input for out of service (Bank 4)
- Input for out of service (Bank 5)
- PFC> BLOCK

The following list presents all the output control parameters for the PFC function:

© Arcteq Relays Ltd

- Cap+ limit reached
- Cap. limit reached
- Cap+ starting
- Cap- starting
- Cap+ request pulse
- Cap- request pulse
- Switch interval time on
- Bank 1 switching failure
- Bank 2 switching failure
- Bank 3 switching failure
- Bank 4 switching failure
- Bank 5 switching failure
- Discharge time on
- PFC> BLOCKED

Measured inputs

The device measures three voltages either line-to-line or line-to-neutral together with three phase currents. Power factor and reactive power are calculated from only one of the connected voltage and current channels.

Used voltage and current channel must be chosen for power factor and reactive power calculation.

Table. 4.6.16 - 551. Measurement inputs of the power factor controller function.

Signal	Description
I_{L1}RMS	Fundamental frequency component of phase L1 (A) current measurement
I_{L2}RMS	Fundamental frequency component of phase L2 (B) current measurement
I_{L3}RMS	Fundamental frequency component of phase L3 (C) current measurement
U_{L1}RMS	Fundamental frequency component of U_{L1}/V voltage measurement
U_{L2}RMS	Fundamental frequency component of U_{L2}/V voltage measurement
U_{L3}RMS	Fundamental frequency component of U_{L3}/V voltage measurement
U_{L12}RMS	Fundamental frequency component of U_{L12}/V voltage measurement
U_{L23}RMS	Fundamental frequency component of U_{L23}/V voltage measurement

General settings

The following parameters define the general settings of the function the basic settings of the capacitor banks, and those of the overall application.

Table. 4.6.16 - 552. General settings for capacitor banks and the application in use.

Name	Range	Description
PFC> mode	• Disabled • Activated	Activates the power factor controller function.
PFC> condition	• Normal • Discharging • Blocked • Switching • Starting	Displays the status of the power factor controller.
Used voltage channel	• UL1 • UL2 • UL3 • U12 • U23	Choose voltage input for power factor measurement. UL1-UL3 available in 3LN voltage measurement mode and U12-U23 available in 2LL/3LL voltage measurement mode.
Used current channel	• IL1 • IL2 • IL3	Choose current input for power factor measurement.
Controlled banks	1...5	Selects the number of capacitor banks.
Operating mode	• FIFO • FILO	Determines the order in which the banks are connected and disconnected. Please read the more detailed descriptions of the modes above in this chapter.
Control type	• Voltage control • Power factor control • PD control (deltaQ)	Selects the control type. Sensitivity control means PF-based control, while voltage control operates based on the voltage level.
Connect banks based on counter value	• Yes • No	Connect 1-5 same size capacitor banks equally based on bank closed counters.
Control mode	• Manual • Automatic	Selects the control mode. Automatic control mode is the default scheme for the power factor controller. Manual control mode should only be used when the bank's kVar level (see the next parameter below) needs to be adjusted manually to a certain level.
Allowed bank traverse time	1.0...10.0 s	Allowed bank traverse time in seconds before control alarm decision is given due to failed bank status change.
Bank 1-5 out of service (manual toggle)	• Normal state • Bank 1-5 out of service	Bank control alarm can change individual bank state in to out of service automatically, but bank status can be changed permanently to fixed open or close manually by using this toggle. Fixed status can be part of planned maintenance.
Bank 1...5 kVar	1.0...50 000.0 kVar	Adjusts the bank's kVar level based on the application's values.
Bank 1...5 close counter	0...4294967295	Number how many times individual bank has been closed. Value can be manually altered in case needed.

© Arcteq Relays Ltd

Name	Range	Description
Clear all bank counter	• - • Clear	It is possible to clear all bank counter when needed.
Clear bank control alarm	• - • Clear	In case failed bank control leads to bank control failure alarm and fixed bank status, this can be cleared by using "clear bank control alarm" -option.

When a capacitor bank is in regular use, the automatic control mode should be applied. For each application with 1...5 capacitor banks, the user must set the kVar level of each bank individually in the function's *Info* tab.

Read-only parameters

The function's *Info* page displays useful, real-time information on the state of the function. It is accessed either through the device's HMI display, or through the setting tool software when it is connected to the device and its Live Edit mode is active.

Table. 4.6.16 - 553. Information displayed by the function.

Name	Range	Step	Description
I0> LN behaviour	• On • Blocked • Test • Test/Blocked • Off	-	Displays the mode of NEF block. This parameter is visible only when *Allow setting of individual LN mode* is enabled in *General* menu.
I0> condition	• Normal • Start • Trip • Blocked	-	Displays status of the protection function.
Detected I0 angle	-360.00...360.00 deg	0.01 deg	Angle of I0 against reference. If phase voltages are available, positive sequence voltage angle is used as reference. If voltages are not available, positive sequence current angle is used as reference.
Detected fault type	• - • A-G-R • B-G-F • C-G-R • A-G-F • B-G-R • C-G-F	-	Displays the detected fault type and direction of previous fault. "A/B/C" stand for one of the three phases. "G" stands for "ground". "F" stands for "forward" direction and "R" stands for "reverse" direction.
Expected operating time	-1800.000...1800.000 s	0.005 s	Displays the expected operating time when a fault occurs. When IDMT mode is used, the expected operating time depends on the measured current value. If the measured current changes during a fault, the expected operating time changes accordingly.
Time remaining to trip	0.000...1800.000 s	0.005 s	When the function has detected a fault and counts down time towards a trip, this displays how much time is left before tripping occurs.

Name	Range	Step	Description
I_{meas}/I_{set} at the moment	0.00...1250.00	0.01	The ratio between the measured current and the pick-up value.

Table. 4.6.16 - 554. Real-time information for the function.

Name	Description
Max kVar (reserve)	Combines the maximum possible amount of kVar that can be connected in the application. The value is calculated based on the given values of the kVar settings for the capacitor banks in use.
Total kVar (in use)	Displays the current kVar level that is used and connected to the system. The value is formed based on both open and closed circuit breaker (1...5) statuses.
Power factor	Displays the measured power factor.
System 3 phase kVA (PFC>)	Displays system 3 phase apparent power (kVA) measurement.
System 3 phase kVar (PFC1)	Displays system 3 phase reactive power (kVar) measurement.
System kVar target for conrol (PFC>)	Displays kVar target which is calculated based on the system apparent power kVA level.
Q delta to Cos Pi set point (Cap+)	More capacitance set point as per kVar.
Q delta to Cos Pi set point (Cap-)	Less capacitance set point as per kVar.
Delta Q	Measured delta Q indicates the value between target kVar and an actual measured kVar of the system.
Switch interval time	Minimum value between subsequential bank control.
Bank 1...5 condition	Displays the condition of a selected capacitor bank as "Off" or "Active", which shows whether the capacitor bank in question is connected to the system or not.
Bank 1...5 discharge time	How long it takes for a single bank to discharge before it can be closed again.
Bank 1...5 switching object	The controlled objects of banks 1...5 are fixed based on their running number: Capacitor bank 1 controls Object 1, Capacitor bank 2 controls Object 2, and so on.
Bank 1...5 status	Indicates the current status of an individual bank.
Bank control failure calculator	Calculates the sum of all bank control failures in the system.

The following information is also available in the device's mimic display, among many others:

- max. kVar (reserve)
- total kVar (in use)
- power factor
- power factor direction
- bank condition (as object status)

© Arcteq Relays Ltd

- bank 1...5 kVar value
- frequency
- total harmonic distortion (THD)
- capacitance limits

The default mimic view can be adjusted for each of the 1...5 capacitor banks according to application requirements.

Pick-up settings: Power factor control

The PFC's operating level, where the function starts to increase or decrease the total kVar level, is determined byt the cos phi set points and the kVar thresholds.

Increasing the capacitance requires that both the "Cos phi set point (cap+)" and "More capacitance +kVar threshold" parameters have been exceeded. At the same time the measured current amplitude must be above the "Minimum current block limit" setting. If these three conditions are met, the *Cap+ limit reached* signal activates in the output matrix. After a set time (set in the "Bank control starting delay" pick-up setting) has passed, the *Cap+ request pulse* signal activates in the output matrix for 250 ms, and the next capacitor bank is ordered to close to further increase the capacitance in the network. Please note that if internal blocking is enabled, the *Cap+ request pulse* signal will not activate, even though the *Cap+ limit reached* signal remains active while all the conditions are met! Reversely, decreasing the network's capacitance requires that the "Cos phi set point (cap–)" and "Less capacitance –kVar threshold" parameters must both be exceeded.

The power factor controller has no hysteresis for the cos phi set points. It uses a discharge time instead.

The function's automatic opertation is boosted internally by the "Switch interval" parameter: during the time set for this parameter, no capacitor bank will be controlled!

Setting group selection controls the operating characteristics of the function, i.e. the user or user-defined logic can change function parameters while the function is running.

Table. 4.6.16 - 555. Voltage contol mode settings.

Name	Range	Step	Default	Description
Under voltage setting (more cap.)	70.00…130.00 %Un	0.01 %Un	96.00 %Un	Sets the threshold for the capacitance increase.
Over voltage settings (less cap.)	70.00…130.00 %Un	0.01 %Un	102.00 %Un	Sets the threshold for the capacitance decrease.
Minimum voltage block limit	0.0…50.0 %Un	0.1 %Un	10.0 %Un	Sets the minimum voltage limit for blocking.

Table. 4.6.16 - 556. Power factor control mode settings.

Name	Range	Step	Default	Description
Cos phi set point (cap+)	–1.00...1.00	0.01	0.95	Sets the operating condition of the power factor controller for more capacitance.
Cos phi set point (cap–)	–1.00...1.00	–	0.99	Sets the operating condition of the power factor controller for less capacitance.
More capacitance +kVar threshold	–50 000...50 000 kVar	0.1 kVar	600 kVar	Sets the threshold for the capacitance increase.

Name	Range	Step	Default	Description
Less capacitance –kVar threshold	–50 000...50 000 kVar	0.1 kVar	–400 kVar	Sets the threshold for the capacitance decrease.
Minimum current block limit	0.00…1.00 p.u.	0.01 p.u.	0.30 p.u.	Sets the minimum current limit for blocking.

Table. 4.6.16 - 557. PD control (deltaQ) settings.

Name	Range	Step	Default	Description
Target power factor	–1.00...1.00	0.01	0.95	Sets the operating condition of the power factor controller for more capacitance.
Bank size for deltaQ calculation	1.00...50 000 kVar	0.1 kVar	0.99	Enter the controlled bank size required for the proper calculation of add–remove capacitance steps according to the target power factor setting.
More capacitance +kVar percentage	1...100 %	0.1 %	100.0 %	The capacitance percentage indicates the degree to which reactive power compensation is needed. A 100% value signifies that the system's reactive power (kVar) deviates from the target power factor setting by an amount equal to the "Bank Size for delta Q calculation," necessitating the addition or removal of capacitance.
Less capacitance –kVar percentage	1...100 %	0.1 %	100.0 %	

Table. 4.6.16 - 558. Universal control settings.

Name	Range	Step	Default	Description
Bank control starting delay	1.0…1 800.0 s	0.1 s	1.0 s	Sets the delay for bank control starting.
Fast bank recontrol in use	• No • Yes	-	Yes	Bank operation activates after starting delay has exceeded and bank is controlled. After bank opening or closing, a switching interval time is run and all automated control is blocked during this period. In case terms for another bank control are still there after switching time delay has passed, another bank will be controlled right away without starting delay in case fast bank recontrol is enabled.
Switch interval time	1.0...1 800.0 s	0.1 s	60.0 s	Sets the time interval for switching (aka the blocking condition).

Pick-up settings: Voltage control

The voltage control mode adjusts the power factor level based solely on the measured system voltage level. In a normal state, the voltage level must be higher than the "minimum voltage block limit" and between the "Under voltage setting (more cap.)" and "Over voltage setting (less cap.)". To control capacitor banks, the scheme is straightforward: once the voltage falls below the "under voltage setting (more cap.)", a request for more capacitance is sent.

© Arcteq Relays Ltd

The adjustment of power factor through voltage control is a common practice in power systems to maintain grid stability and efficiency. According to different standards, voltage control modes are utilized to regulate the voltage levels within specified limits to ensure reliable operation of the power grid.

Pick-up settings: PF control (deltaQ)

In this mode power factor is control by setting a single target PF value. Also capacitor bank size has to be known, due to reason that apparent power S(kVA) is constantly measured and bank is closed with certain positive or negative delta Q value based on the measured apparent power amplitude. In case system kVA is small and bank size is too large compared to this, there won't be control in certain situations.

Let's say measured S is 1143kVA, bank size is 1000kVar and "More capacitance +kVar percentage" –setting is 10.0%. Measured system current angle is -24 degrees.

Target PF = 0.95 → Target Q = 357kVar

Measured reactive power = 465kVar

$$if\ (1000kVar * 10\% + 357kVar) < 465kVar \rightarrow Control\ cap +$$

$$457kVar < 465kVAr \rightarrow True\ (control\ cap+)$$

"Less capacitance –kVar percentage" –setting is 15.0%.

$$if\ (357kVar - 1000kVar * 15\%) > 465kVar \rightarrow Control\ cap -$$

$$207kVar > 465kVar \rightarrow False\ (No\ cap - control)$$

Function blocking

The block signal is checked in the beginning of each program cycle. The blocking signal is received from the blocking matrix in the function's dedicated input. If the blocking signal is not activated when the pick-up element activates, a START signal is generated and the function proceeds to the time characteristics calculation.

If the blocking signal is active when the pick-up element activates, a BLOCKED signal is generated and the function does not process the situation further. If the START function has been activated before the blocking signal, it resets and the release time characteristics are processed similarly to when the pickup signal is reset.

The variables the user can set are binary signals from the system. The blocking signal needs to reach the device minimum of 5 ms before the set operating delay has passed in order for the blocking to activate in time.

Discharge time

The discharge time (defined with the "Switch interval" parameter) is used to limit the capacitor bank control from adjusting the steps too fast. Is is mandatory to wait a specific time between each step, regardless of whether the adjustment is to increase or decrease the kVar level. The discharge time can be set to 1.0...1 800.0 seconds in steps of 0.1 seconds.

Events

The power factor controller function (abbreviated "PFC" in event block names) generates events from the status changes in the events listed below. The user can select the status ON or OFF for messages in the main event buffer. The function's output signals can be used for direct I/O controlling and user logic programming. The events triggered by the function are recorded with a time stamp.

Table. 4.6.16 - 559. Event codes.

Event block name	Description
PFC1	Increase capacitance request ON/OFF
PFC1	Decrease capacitance request ON/OFF
PFC1	Switching time ON/OFF
PFC1	Manual control mode ON/OFF
PFC1	PFC Block ON/OFF
PFC1	Bank 1 discharging ON/OFF
PFC1	Bank 2 discharging ON/OFF
PFC1	Bank 3 discharging ON/OFF
PFC1	Bank 4 discharging ON/OFF
PFC1	Bank 5 discharging ON/OFF
PFC1	Switching failure ON/OFF
PFC1	Starting increase capacitance ON/OFF
PFC1	Starting decrease capacitance ON/OFF

4.6.17 Programmable control switch

The programmable control switch is a control function that controls its binary output signal. This output signal can be controlled locally from the device's mimic or remotely from the RTU. The main purpose of programmable control switches is to block or enable function and to change function properties by changing the setting group. However, this binary signal can also be used for any number of other purposes, just like all other binary signals. Once a programmable control switch has been activated or disabled, it remains in that state until given a new command to switch to the opposite state (see the image below). The switch cannot be controlled by an auxiliary input, such as digital inputs or logic signals; it can only be controlled locally (mimic) or remotely (RTU).

Figure. 4.6.17 - 266. When a PCS has been controlled "ON" or "OFF", the PCS will keep its state.

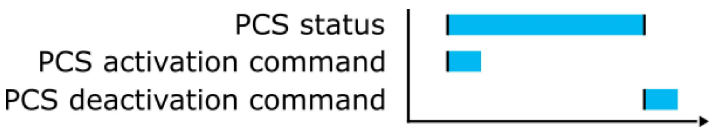

© Arcteq Relays Ltd
IM00099

Setting up a switch in the mimic editor

Figure. 4.6.17 - 267. Programmable control switch setup in the mimic editor.

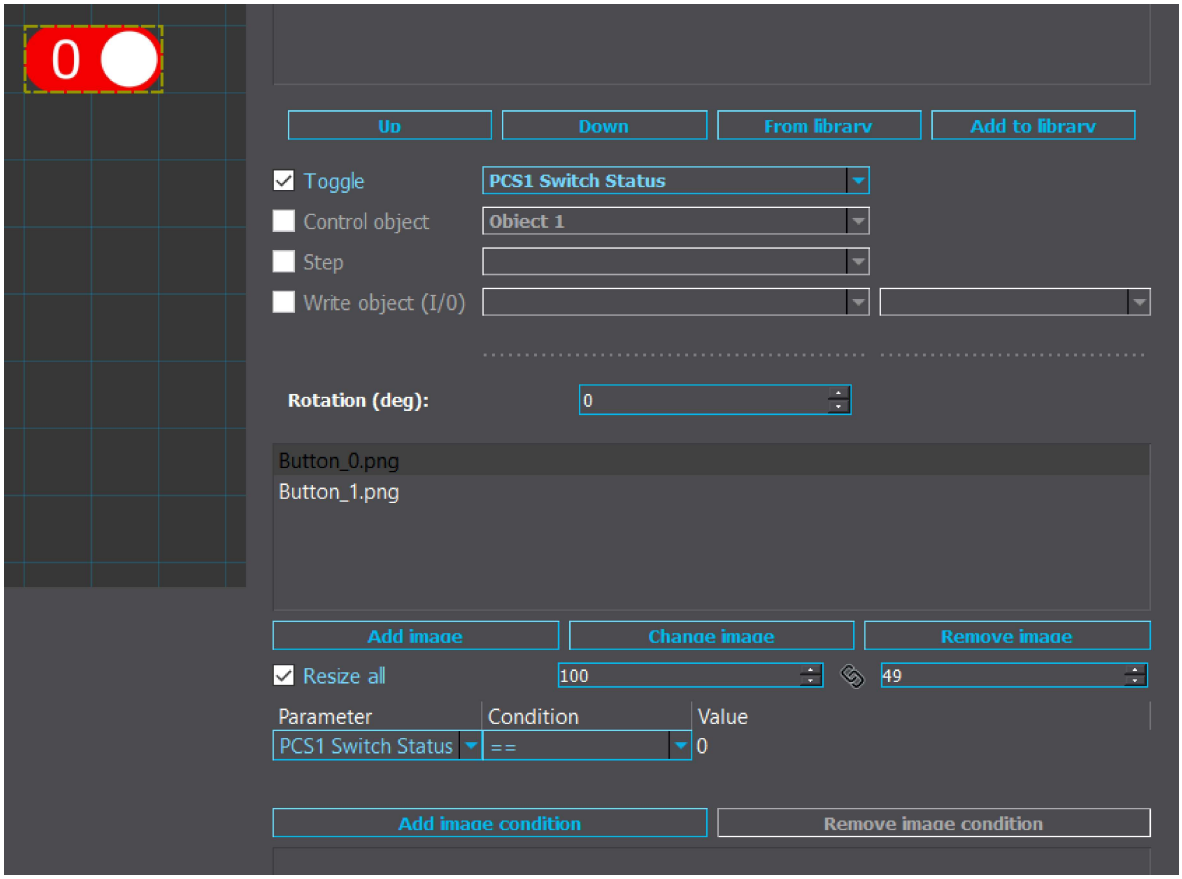

When an item has been added to the mimic, a collection of toggleable buttons can be found from the library with the "From library" button. To make an item a "programmable control switch", select one of the programmable switches (PCS1…5 Switch status) from the "Toggle" dropdown menu. After this select one of the images in the item ("Button_0.png" and "Button_1.png" in the example image above) and then choose the corresponding programmable control switch as the image condition. In the example image "Button_0.png" is displayed when "PCS1 Switch Status == 0". Set the other image (in this case "Button_1.png) to "PCS1 Switch Status == 1". When this is done, the image displayed by the item will follow the status of the programmable control switch.

If more than five toggleable switches are needed, logical inputs can also be set for the same purpose. The only difference is that the status of logical inputs are set to zero when the processor is rebooted, whereas programmable control switches keep the status.

Settings.

These settings can be accessed at *Control → Device I/O → Programmable control switch*.

Table. 4.6.17 - 560. Settings.

Name	Range	Default	Description
Switch name	-	Switchx	The user-settable name of the selected switch. The name can be up to 32 characters long.

Name	Range	Default	Description
Access level for Mimic control	• User • Operator • Configurator • Super user	Configurator	Determines which access level is required to be able to control the programmable control switch via the Mimic.

Events

The programmable control switch function (abbreviated "PCS" in event block names) generates events from the status changes in the events listed below. The user can select which event messages are stored in the main event buffer: ON, OFF, or both. The events triggered by the function are recorded with a time stamp. The function offers five (5) independent switches. The function's output signals can be used for direct I/O controlling and user logic programming.

Table. 4.6.17 - 561. Event messages.

Event block name	Event names
PCS	Switch 1 ON/OFF
PCS	Switch 2 ON/OFF
PCS	Switch 3 ON/OFF
PCS	Switch 4 ON/OFF
PCS	Switch 5 ON/OFF

4.6.18 Function buttons

The main purpose of function buttons is to block or enable functions and to change function properties by changing the setting group. However, this binary signal can also be used for any number of other purposes, just like all other binary signals. The available number of function buttons depend on the size of the AQ-ONE device:

- Small device: no function buttons
- Medium device: 6 function buttons
- Big device: 12 function buttons

Function buttons have two operation modes: "Press release" and "Toggle On/Off". In "Press release" mode the button status is active while the button is pressed down. In "Toggle On/Off" mode the button status toggles between "On" and "Off". Each button has a user configurable LED at the top left corner of the button. The LED can be configured to activate red, orange or green color from button status or any other logical binary signal.

General button settings and LED activation settings can be set at *Control → Device IO → Function Button Settings*.

NOTICE!
The status of the function button outputs can only be controlled from the front panel i.e. can't be controlled remotely. Therefore it is recommended to use "a virtual button" (programmable control switches or logical inputs) if a toggleable signal must be controlled both locally and remotely.

© Arcteq Relays Ltd

Table. 4.6.18 - 562. User button settings

Name	Range	Step	Default	Description
Access level for function buttons	• User • Operator • Configurator • Super user	-	Operator	Determines which access level is required to be able to control the buttons.
Consider Local/ Remote switch for push-buttons	• No • Yes	-	No	When set to "Yes", the buttons can be operated only when the "L/R" button has been set to "Local" mode .
User editable description button 1…12	-	-	BTN1...12	Description of the button. If "Function button" view has been added to the "Carousel design", these descriptions are used for the buttons.
Function button 1…12 mode	Press release Toggle On/Off	-	Press release	Defines the operation mode of the button. In "Press release" mode the button signal is active while the button is pressed down. In "Toggle On/Off" mode the button signal changes status between "On" and "Off" each time the button is pressed.

Table. 4.6.18 - 563. Function button output signals

Signal name	Description
Status Function Button 1...12 ON/OFF	"On" and "Off" status of each button

4.6.19 Analog input scaling curves

Sometimes when measuring with RTD inputs, milliampere inputs and digital inputs the measurement might be inaccurate because the signal coming from the source is inaccurate. One common example of this is tap changer location indication signal not changing linearly from step to step. If the output difference between the steps are not equal to each other, measuring the incoming signal accurately is not enough. "Analog input scaling curves" menu can be used to take these inaccuracies into account.

Analog input scaling curve settings can be found at *Measurement → AI(mA, DI volt) scaling* menu.

Currently following measurements can be scaled with analog input scaling curves:

- RTD inputs and mA inputs in "RTD & mA input" option cards
- mA inputs in "4x mA output & 1x mA input" option cards
- mA input in "4x mA input & 1x mA output" option cards
- Digital input voltages

Table. 4.6.19 - 564. Main settings (input channel).

Name	Range	Step	Default	Description
Analog input scaling	• Disabled • Activated	-	Disabled	Enables and disables the input.

Name	Range	Step	Default	Description
Scaling curve 1...10	• Disabled • Activated	-	Disabled	Enables and disables the scaling curve and the input measurement.
Curve 1...10 input signal select	• S7 mA Input • S8 mA Input • S15 mA Input • S16 mA Input • DI1...DI20 Voltage • RTD S1...S16 Resistance • mA In 1 (I card 1) • mA In 2 (I card 2) • mA In 1 (T card 1) • mA In 2 (T card 1) • mA In 3 (T card 1) • mA In 4 (T card 1) • mA In 1 (T card 2) • mA In 2 (T card 2) • mA In 3 (T card 2) • mA In 4 (T card 2)	-	S7 mA Input	Defines the measurement used by scaling curve.
Curve 1...10 input signal filtering	• No • Yes	-	No	Enables calculation of the average of received signal.
Curve 1...10 input signal filter time constant	0.005...3800.000 s	0.005 s	1 s	Time constant for input signal filtering. This parameter is visible when "Curve 1...4 input signal filtering" has been set to "Yes".
Curve 1...10 input signal out of range set	• No • Yes	-	No	Enables out of range signals. If input signal is out of minimum and maximum limits, "ASC1...4 input out of range" signal is activated.
Curve1...10 input minimum	-1 000 000.00...1 000 000.00	0.00001	0	Defines the minimum input of the curve. If input is below the set limit, "ASC1...4 input out of range" is activated.
Curve 1...10 input	-1 000 000.00...1 000 000.00	0.00001	-	Displays the input measurement received by the curve.
Curve1...10 input maximum	-1 000 000.00...1 000 000.00	0.00001	0	Defines the maximum input of the curve. If input is above the set limit, "ASC1...4 input out of range" is activated.

© Arcteq Relays Ltd

Name	Range	Step	Default	Description
Curve1...10 output	-1 000 000.00...1 000 000.00	0.00001	-	Displays the output of the curve.

The input signal filtering parameter calculates the average of received signals according to the set time constant. This is why rapid changes and disturbances (such as fast spikes) are smothered. The Nyquist rate states that the filter time constant must be at least double the period time of the disturbance process signal. For example, the value for the filter time constant is 2 seconds for a 1 second period time of a disturbance oscillation.

$$H(s) = \frac{Wc}{S+Wc} = \frac{1}{1+s/Wc}$$

When the curve signal is out of range, it activates the "ASC1...10 input out of range" signal, which can be used inside logic or with other functions of the device. The signal can be assigned directly to an output relay or to an LED in the I/O matrix. The "Out of range" signal is activated, when the measured signal falls below the set input minimum limit, or when it exceeds the input maximum limit.

If for some reason the input signal is lost, the value is fixed to the last actual measured cycle value. The value does not go down to the minimum if it has been something else at the time of the signal breaking.

Table. 4.6.19 - 565. Output settings and indications.

Name	Range	Step	Default	Description
Curve 1...10 update cycle	5...10 000ms	5ms	150ms	Defines the length of the input measurement update cycle. If the user wants a fast operation, this setting should be fairly low.
Scaled value handling	• Floating point • Integer out (Floor) • Integer (Ceiling) • Integer (Nearest)	-	Floating point	Rounds the milliampere signal output as selected.
Input value 1	0...4000	0.000 01	0	The measured input value at Curve Point 1.
Scaled output value 1	$-10^7...10^7$	0.000 01	0	Scales the measured milliampere signal at Point 1.
Input value 2	0...4000	0.000 01	1	The measured input value at Curve Point 2.
Scaled output value 1	$-10^7...10^7$	0.000 01	0	Scales the measured milliampere signal at Point 2.

Name	Range	Step	Default	Description
Add curvepoint 3...20	• Not used • Used	-	Not used	Allows the user to create their own curve with up to twenty (20) curve points, instead of using a linear curve between two points.

4.6.20 Logical outputs

Logical outputs are used for sending binary signals out from a logic that has been built in the logic editor. Logical signals can be used for blocking functions, changing setting groups, controlling digital outputs, activating LEDs, etc. The status of logical outputs can also be reported to a SCADA system. 64 logical outputs are available. The figure below presents a logic output example where a signal from the circuit breaker failure protection function controls the digital output relay number 3 ("OUT3") when the circuit breaker's cart status is "In".

Figure. 4.6.20 - 268. Logic output example. Logical output is connected to an output relay in matrix.



Logical output descriptions

Logical outputs can be given a description. The user defined description are displayed in most of the menus:

- logic editor
- matrix
- block settings
- event history
- disturbance recordings
- etc.

© Arcteq Relays Ltd

Table. 4.6.20 - 566. Logical output user description.

Name	Range	Default	Description
User editable description LO1...64	1...31 characters	Logical output 1...64	Description of the logical output. This description is used in several menu types for easier identification.

NOTICE!
After editing user descriptions the event history will start to use the new description only after resetting the HMI. HMI can be reset from *General → Device info → HMI restart*.

Events

The logical outputs (abbreviated "LOGIC" in event block names) generates events from the status changes in the events listed below. The user can select which event messages are stored in the main event buffer: ON, OFF, or both. The events triggered by the function are recorded with a time stamp. The function's output signals can be used for direct I/O controlling and user logic programming.

Table. 4.6.20 - 567. Event messages.

Event block name	Event names
LOGIC1	Logical out 1...32 ON/OFF
LOGIC3	Logical out 33...64 ON/OFF

4.6.21 Logical inputs

Logical inputs are binary signals that a user can control manually to change the behavior of the device or to give direct control commands. Logical inputs can be controlled with a virtual switch built in the mimic and from a SCADA system. Logical inputs are volatile signals: their status will always return to "0" when the device is rebooted. 32 logical inputs are available.

Logical inputs have two modes available: Hold and Pulse. When a logical input which has been set to "Hold" mode is controlled to "1", the input will switch to status "1" and it stays in that status until it is given a control command to go to status "0" or until the device is rebooted. When a logical input which has been set to "Pulse" mode is controlled to "1", the input will switch to status "1" and return back to "0" after 5 ms.

The figure below presents the operation of a logical input in Hold mode and in Pulse mode.

Figure. 4.6.21 - 269. Operation of logical input in "Hold" and "Pulse" modes.

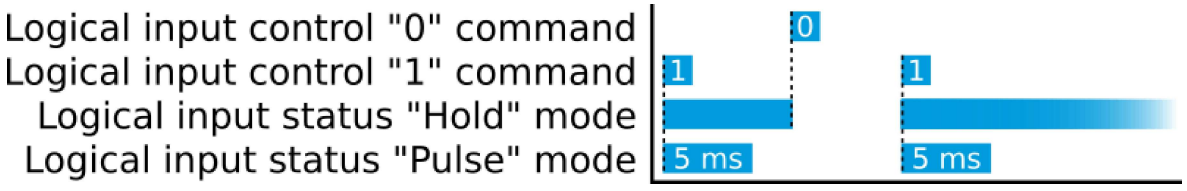

A logical input pulse can also be extended by connecting a DELAY-low gate to a logical output, as has been done in the example figure below.

Figure. 4.6.21 - 270. Extending a logical input pulse.

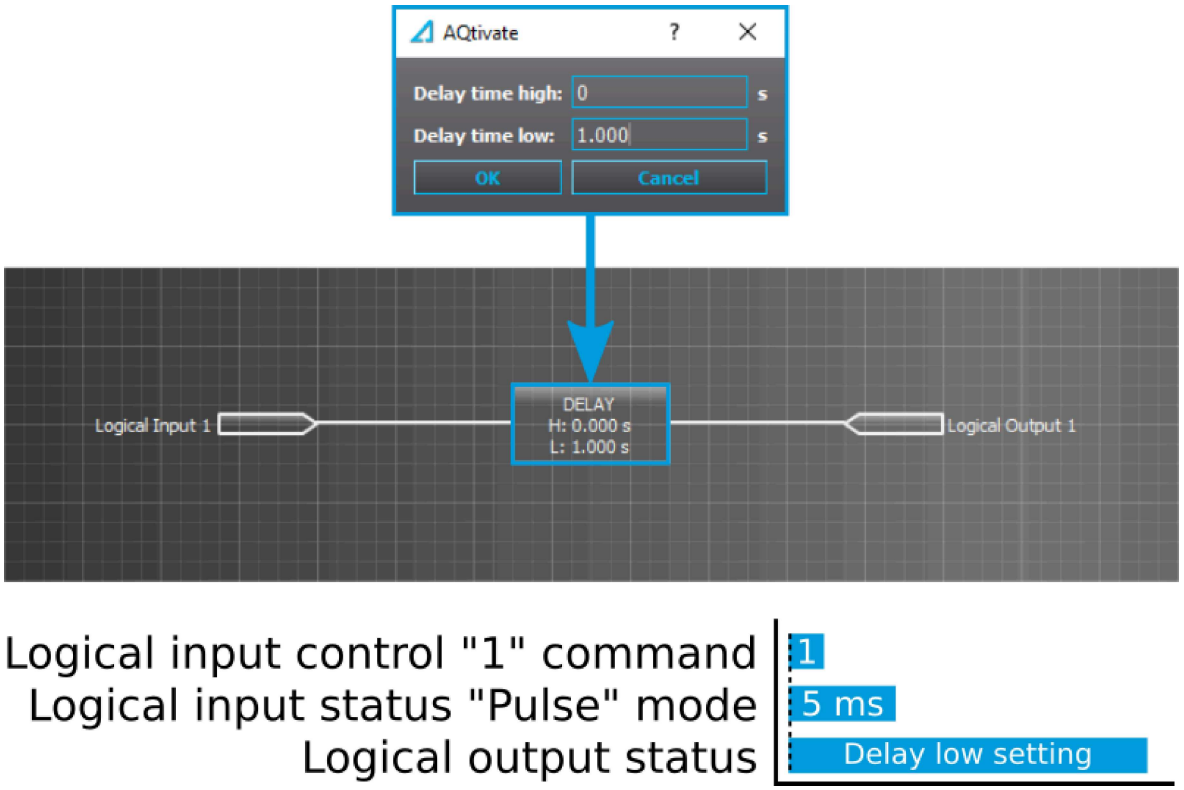

Logical input descriptions

Logical inputs can be given a description. The user defined description are displayed in most of the menus:

- logic editor
- matrix
- block settings
- event history
- disturbance recordings
- etc.

Table. 4.6.21 - 568. Logical input user description.

Name	Range	Default	Description
User editable description LI1...32	1...31 characters	Logical input 1...32	Description of the logical input. This description is used in several menu types for easier identification.

NOTICE!
After editing user descriptions the event history will start to use the new description only after resetting the HMI. HMI can be reset from *General → Device info → HMI restart*.

© Arcteq Relays Ltd
IM00099

Events

The logical outputs (abbreviated "LOGIC" in event block names) generates events from the status changes in the events listed below. The user can select which event messages are stored in the main event buffer: ON, OFF, or both. The events triggered by the function are recorded with a time stamp. The function's output signals can be used for direct I/O controlling and user logic programming.

Table. 4.6.21 - 569. Event messages.

Event block name	Event names
LOGIC2	Logical in 1...32 ON/OFF

4.7 Monitoring functions

4.7.1 Current transformer supervision

The current transformer supervision function (abbreviated CTS in this document) is used for monitoring the CTs as well as the wirings between the device and the CT inputs for malfunctions and wire breaks. An open CT circuit can generate dangerously high voltages into the CT secondary side, and cause unintended activations of current balance monitoring functions.

Figure. 4.7.1 - 271. Secondary circuit fault in phase L1 wiring.

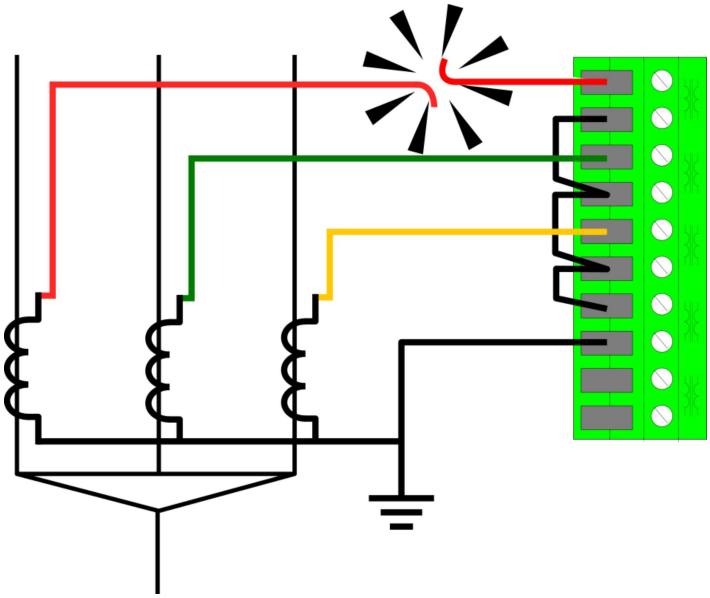

The function constantly monitors the instant values and the key calculated magnitudes of the phase currents. Additionally, the residual current circuit can be monitored if the residual current is measured from a dedicated residual current CT. The user can enable and disable the residual circuit monitoring at will.

The following conditions have to be met simultaneously for the function alarm to activate:

- None of the three-phase currents exceeds the I_{set} *high limit* setting.
- At least one of the three-phase currents exceeds the I_{set} *low limit* setting.
- At least one of the three-phase currents are below the I_{set} *low limit* setting.
- The ratio between the calculated minimum and maximum of the three-phase currents is below the I_{set} *ratio* setting.

- The ratio between the negative sequence and the positive sequence exceeds the *I2/I1 ratio* setting.
- The calculated difference (IL1+IL2+IL3+I0) exceeds the I_{sum} *difference* setting (optional).
- The above-mentioned condition is met until the set time delay for alarm.

Measured input

The function block uses fundamental frequency component of phase current measurement values and residual current measurement values. The function supervises the angle of each current measurement channel. Positive sequence current and negative sequence currents are calculated from the phase currents. The user can select what is used for the residual current measurement: nothing, the I01 channel, or the I02 channel.

Table. 4.7.1 - 570. Measured inputs of the CTS function.

Signal	Description
I_{L1}RMS	Fundamental frequency component of phase L1 (A) current
I_{L2}RMS	Fundamental frequency component of phase L2 (B) current
I_{L3}RMS	Fundamental frequency component of phase L3 (C) current
I_{01}RMS	Fundamental frequency component of residual input I01
I_{02}RMS	Fundamental frequency component of residual input I02

General settings

The following general settings define the general behavior of the function. These settings are static i.e. it is not possible to change them by editing the setting group.

Table. 4.7.1 - 571. General settings of the function.

Name	Range	Default	Description
CTS LN mode	• On • Blocked • Test • Test/ Blocked • Off	On	Set mode of CTS block. This parameter is visible only when *Allow setting of individual LN mode* is enabled in *General* menu.
CTS force status to	• Normal • Alarm • Blocked	Normal	Force the status of the function. Visible only when *Enable stage forcing* parameter is enabled in *General* menu.
I0 input selection	• Not in use • I01 • I02	Not in use	Selects the measurement input for the residual current. If the residual current is measured with a separate CT, the residual current circuit can be monitored with the CTS function as well. However, this does not apply to summing connections (Holmgren, etc.). If the phase current CT is summed with I01 or I02, this selection should be set to "Not in use".
I0 direction	• Add • Subtract	Add	Defines the polarity of residual current channel connection.

© Arcteq Relays Ltd

Name	Range	Default	Description
Compensate natural unbalance	• - • Comp	-	When activated while the line is energized, the currently present calculated residual current is compensated to 0.

Pick-up settings

The I_{set} and $I0_{set}$ setting parameters control the current-dependent pick-up and activation of the current transformer supervision function. They define the minimum and maximum allowed measured current before action from the function. The function constantly calculates the ratio between the setting values and the measured magnitude (I_m) for each of the three phases and for the selected residual current input. The reset ratio of 97 % and 103% are built into the function and is always relative to the I_{set} value. The setting value is common for all measured amplitudes, and when the I_m exceeds the I_{set} value (in single, dual or all currents) it triggers the pick-up operation of the function.

Setting group selection controls the operating characteristics of the function, i.e. the user or user-defined logic can change function parameters while the function is running.

Table. 4.7.1 - 572. Pick-up settings.

Name	Range	Step	Default	Description
I_{set} high limit	0.01…40.00×I_n	0.01×I_n	1.20×I_n	Determines the pick-up threshold for phase current measurement. This setting limit defines the upper limit for the phase current's pick-up element. If this condition is met, it is considered as fault and the function is not activated.
I_{set} low limit	0.01…40.00×I_n	0.01×I_n	0.10×I_n	Determines the pick-up threshold for phase current measurement. This setting limit defines the lower limit for the phase current's pick-up element. This condition has to be met for the function to activate.
I_{set} ratio	0.01…100.00%	0.01%	10.00%	Determines the pick-up ratio threshold between the minimum and maximum values of the phase current. This condition has to be met for the function to activate.
I2/I1 ratio	0.01…100.00%	0.01%	49.00%	Determines the pick-up ratio threshold for the negative and positive sequence currents calculated from the phase currents. This condition has to be met for the function to activate. The ratio is 50 % for a full single-phasing fault (i.e. when one of the phases is lost entirely). Setting this at 49 % allows a current of 0.01 × I_n to flow in one phase, wile the other two are at nominal current.
I_{sum} difference	0.01…40.00×I_n	0.01×I_n	0.10×I_n	Determines the pick-up ratio threshold for the calculated residual phase current and the measured residual current. If the measurement circuit is healthy, the sum of these two currents should be 0.
Time delay for alarm	0.000…1800.000s	0.005s	0.5s	Determines the delay between the activation of the function and the alarm.

Read-only parameters

The function's *Info* page displays useful, real-time information on the state of the protection function. It is accessed either through the device's HMI display, or through the setting tool software when it is connected to the device and its Live Edit mode is active.

Table. 4.7.1 - 573. Information displayed by the function.

Name	Range	Step	Description
CTS LN behaviour	• On • Blocked • Test • Test/ Blocked • Off	-	Displays the mode of CTS block. This parameter is visible only when *Allow setting of individual LN mode* is enabled in *General* menu.
Uncompensated residual unbalance Pri	• Normal • Start • Trip • Blocked	-	Displays the natural unbalance of current after compensating it with *Compensate natural unbalance* parameter.
Natural unbalance ang	-360.00...360.00 deg	0.01 deg	Displays the natural unbalance of angle after compensating it with *Compensate natural unbalance* parameter.
Measured current difference Isum, I0	0.00...50.00 xIn	0.01 xIn	Current difference between summed phases and residual current.
Measured angle difference Isum, I0	-360...360 deg	0.01 deg	Angle difference between summed phases and residual current.

Function blocking

The block signal is checked in the beginning of each program cycle. The blocking signal is received from the blocking matrix in the function's dedicated input. If the blocking signal is not activated when the pick-up element activates, a START signal is generated and the function proceeds to the time characteristics calculation.

If the blocking signal is active when the pick-up element activates, a BLOCKED signal is generated and the function does not process the situation further. If the START function has been activated before the blocking signal, it resets and the release time characteristics are processed similarly to when the pick-up signal is reset.

The variables the user can set are binary signals from the system. The blocking signal needs to reach the device minimum of 5 ms before the set operating delay has passed in order for the blocking to activate in time.

Operating time characteristics

This function supports definite time delay (DT). For detailed information on this delay type please refer to the chapter "General properties of a protection function" and its section "Operating time characteristics".

Typical cases of current transformer supervision

The following nine examples present some typical cases of the current transformer supervision and their setting effects.

© Arcteq Relays Ltd

Figure. 4.7.1 - 272. All works properly, no faults.

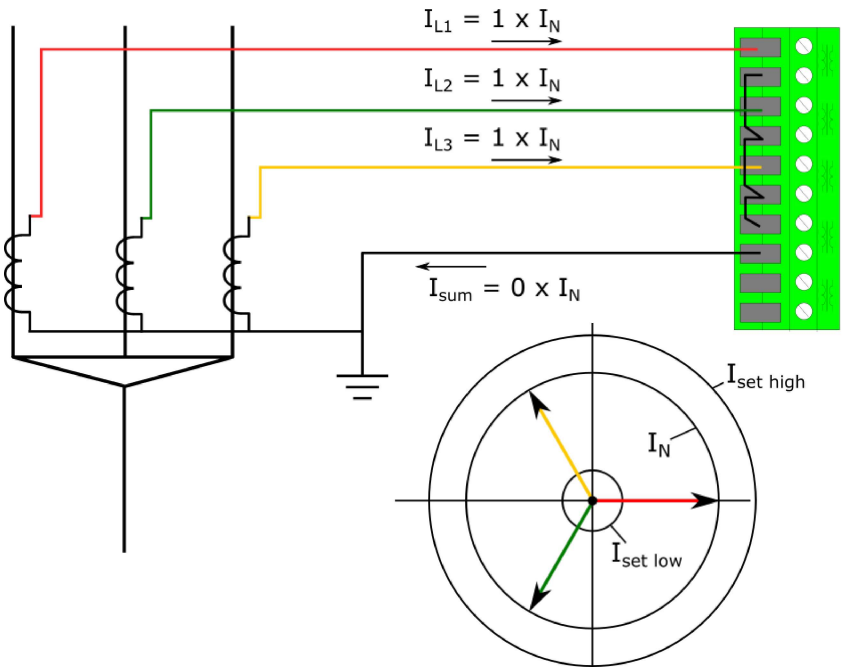

Settings:
I_{set} High limit = 1.20 x I_N
I_{set} Low limit = 0.10 x I_N
I_{set} ratio = 10.00 %
I1/I2 ratio = 49.00 %
I_0 input = Not in use

Measurements:
I_{min} = 1 x I_N
I_{max} = 1 x I_N
I1 = 1 x I_N
I2 = 0 x I_N
I_{min}/I_{max} = 1
I2/I1 = 0%

CTS conditions:
I_{set} High limit < = 1
I_{set} Low limit low < = 0
I_{set} Low limit high > = 1
I ratio < = 0
$I_{unbalance}$ ratio > = 0

Figure. 4.7.1 - 273. Secondary circuit fault in phase L1 wiring.

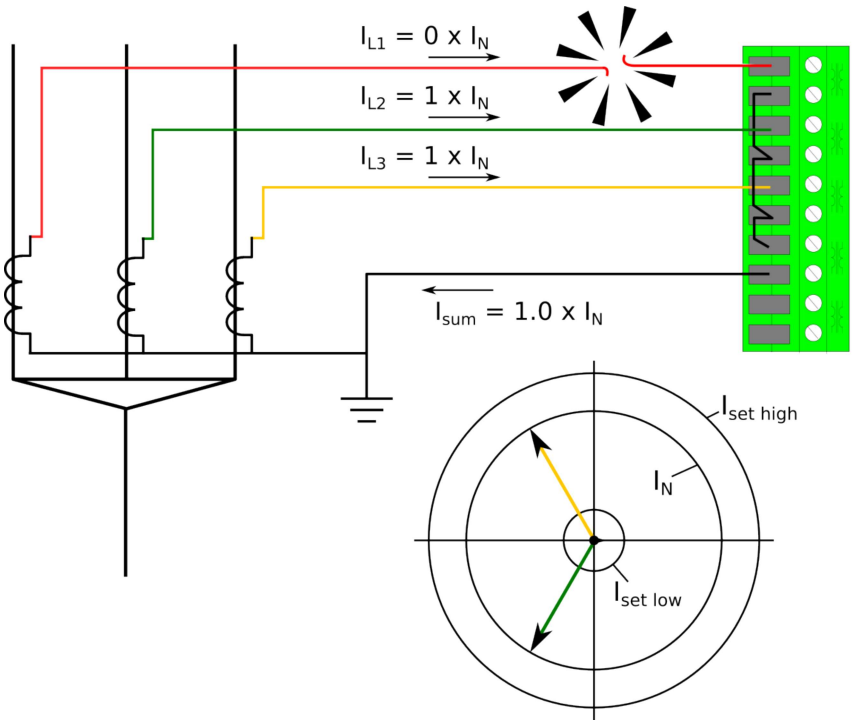

Settings:
I_{set} High limit = 1.20 x I_N
I_{set} Low limit = 0.10 x I_N
I_{set} ratio = 10.00 %
I1/I2 ratio = 49.00 %
I_0 input = Not in use

Measurements:
I_{min} = 0 x I_N
I_{max} = 1 x I_N
I1 = 0.67 x I_N
I2 = 0.33 x I_N
I_{min}/I_{max} = 0
I2/I1 = 50%

CTS conditions:
I_{set} High limit < = 1
I_{set} Low limit low < = 1
I_{set} Low limit high > = 1
I ratio < = 1
$I_{unbalance}$ ratio > = 1

When a fault is detected and all conditions are met, the CTS timer starts counting. If the situation continues until the set time has passed, the function issues an alarm.

Figure. 4.7.1 - 274. Primary circuit fault in phase L1 wiring.

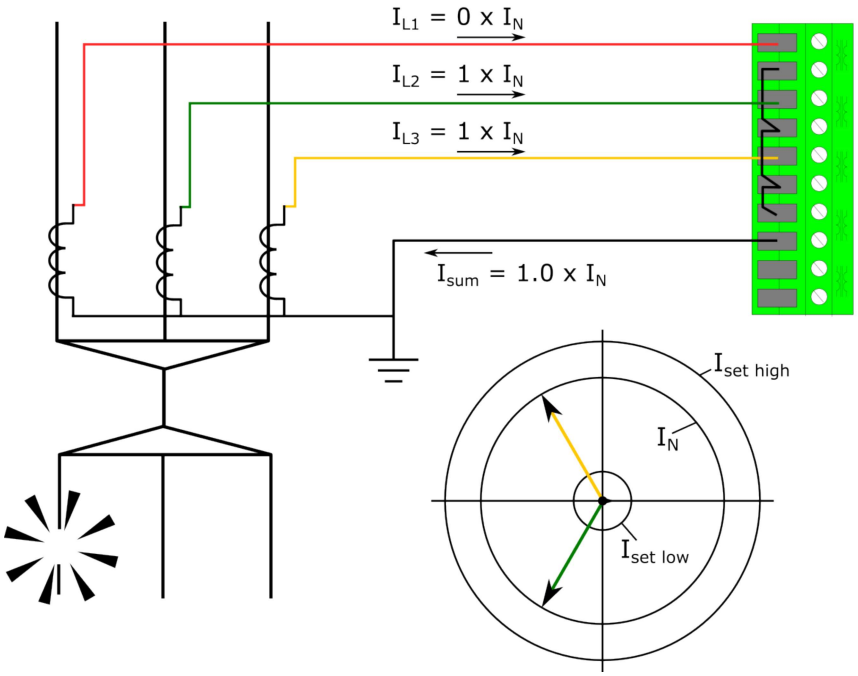

Settings:
I_{set} High limit = 1.20 x I_N
I_{set} Low limit = 0.10 x I_N
I_{set} ratio = 10.00 %
I1/I2 ratio = 49.00 %
I_0 input = Not in use

Measurements:
I_{min} = 0 x I_N
I_{max} = 1 x I_N
I1 = 0.67 x I_N
I2 = 0.33 x I_N
I_{min}/I_{max} = 0
I2/I1 = 50%

CTS conditions:
I_{set} High limit < = 1
I_{set} Low limit low < = 1
I_{set} Low limit high > = 1
I ratio < = 1
$I_{unbalance}$ ratio > = 1

In this example, distinguishing between a primary fault and a secondary fault is impossible. However, the situation meets the function's activation conditions, and if this state (secondary circuit fault) continues until the set time has passed, the function issues an alarm. This means that the function supervises both the primary and the secondary circuit.

Figure. 4.7.1 - 275. No wiring fault but heavy unbalance.

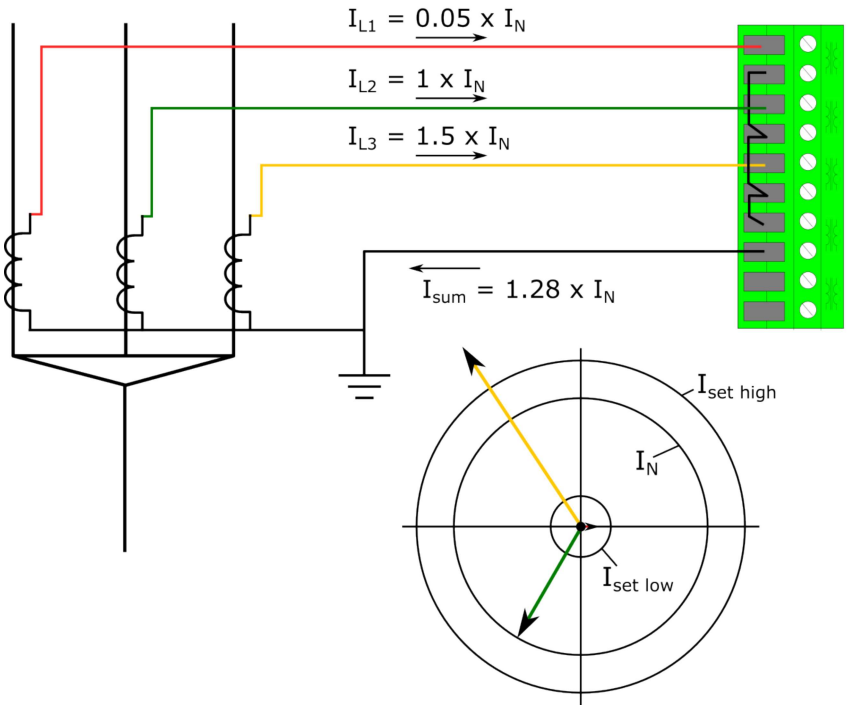

Settings:
I_{set} High limit = 1.20 x I_N
I_{set} Low limit = 0.10 x I_N
I_{set} ratio = 10.00 %
I1/I2 ratio = 49.00 %
I_0 input = Not in use

Measurements:
I_{min} = 0.05 x I_N
I_{max} = 1.50 x I_N
I1 = 0.85 x I_N
I2 = 0.43 x I_N
I_{min}/I_{max} = 0.7 %
I2/I1 = 50.03 %

CTS conditions:
I_{set} High limit < = 0
I_{set} Low limit low < = 1
I_{set} Low limit high > = 1
I ratio < = 1
$I_{unbalance}$ ratio > = 1

If any of the phases exceed the *I_{set} high limit* setting, the operation of the function is not activated. This behavior is applied to short-circuits and earth faults even when the fault current exceeds the *I_{set} high limit* setting.

© Arcteq Relays Ltd
IM00099

Figure. 4.7.1 - 276. Low current and heavy unbalance.

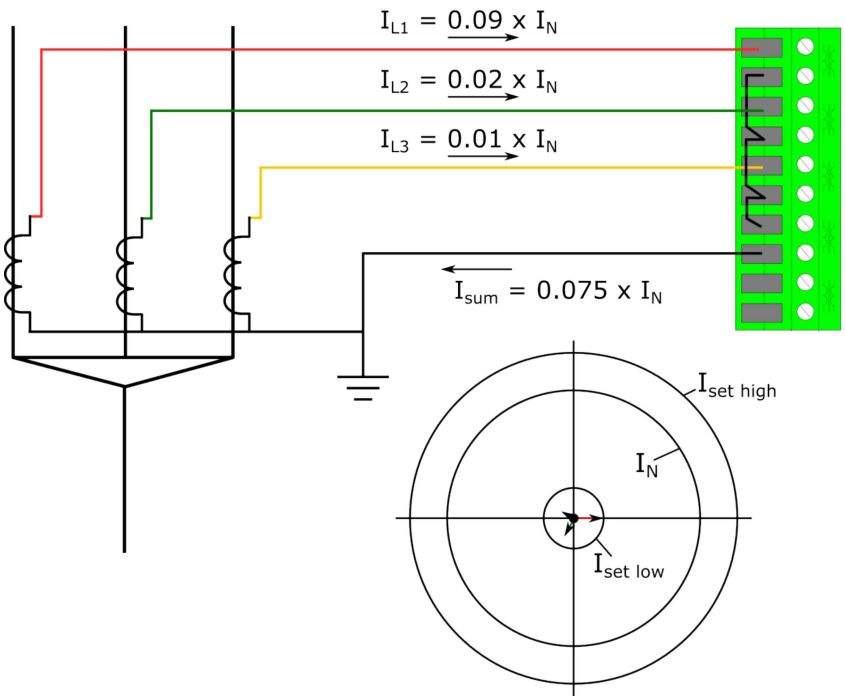

Settings:
I_{set} High limit = 1.20 x I_N
I_{set} Low limit = 0.10 x I_N
I_{set} ratio = 10.00 %
I1/I2 ratio = 49.00 %
I_0 input = Not in use

Measurements:
I_{min} = 0.01 x I_N
I_{max} = 0.09 x I_N
I1 = 0.04 x I_N
I2 = 0.03 x I_N
I_{min}/I_{max} = 11.0 %
I2/I1 = 62.92 %

CTS conditions:
I_{set} High limit < = 1
I_{set} Low limit low < = 1
I_{set} Low limit high > = 0
I ratio < = 1
$I_{unbalance}$ ratio > = 1

If all of the measured phase magnitudes are below the *I_{set} low limit* setting, the function is not activated even when the other conditions (inc. the unbalance condition) are met.

If the *I_{set} high limit* and *I_{set} low limit* setting parameters are adjusted according to the application's normal behavior, the operation of the function can be set to be very sensitive for broken circuit and conductor faults.

Figure. 4.7.1 - 277. Normal situation, residual current also measured.

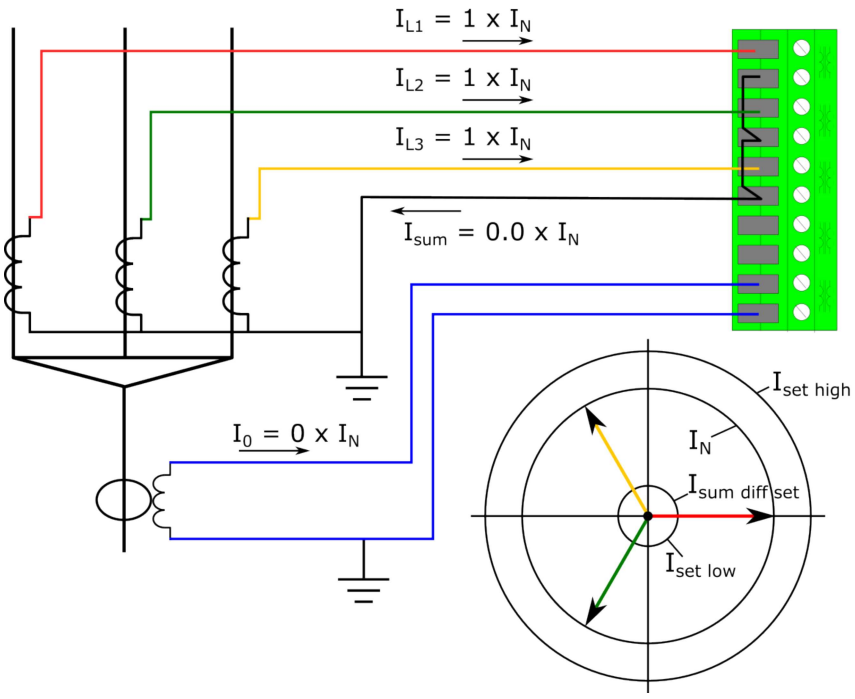

Settings:
I_{set} High limit = 1.20 x I_N
I_{set} Low limit = 0.10 x I_N
I_{set} ratio = 10.00 %
I1/I2 ratio = 49.00 %
I_0 input = I_{01}
I_{sum} Difference= 0.10 x I_N

Measurements:
I_{min} = 1 x I_N
I_{max} = 1 x I_N
I1 = 1 x I_N
I2 = 0 x I_N
I_{min}/I_{max} = 1
I2/I1 = 0
I_{sum} Difference= 0.0 x I_N

CTS conditions:
I_{set} High limit < = 1
I_{set} Low limit low < = 0
I_{set} Low limit high > = 1
I ratio < = 0
$I_{unbalance}$ ratio > = 0

When the residual condition is added with the "I0 input selection", the sum of the current and the residual current are compared against each other to verify the wiring condition.

Figure. 4.7.1 - 278. Broken secondary phase current wiring.

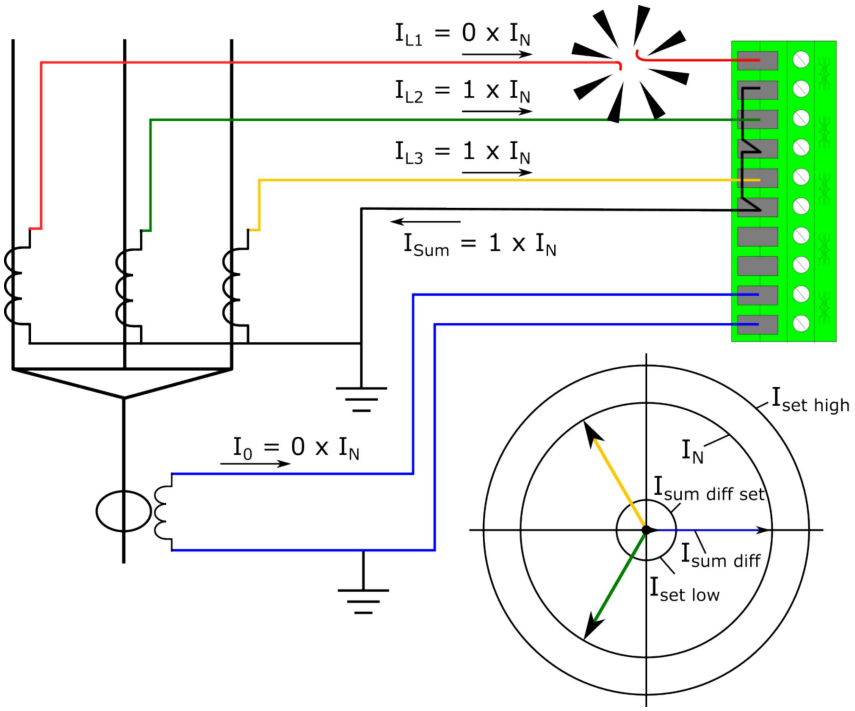

Settings:
I_{set} High limit = 1.20 x I_N
I_{set} Low limit = 0.10 x I_N
I_{set} ratio = 10.00 %
I1/I2 ratio = 49.00 %
I_0 input = I_{01}
I_{sum} Difference= 0.10 x I_N

Measurements:
I_{min} = 1 x I_N
I_{max} = 0 x I_N
I1 = 0.67 x I_N
I2 = 0.33 x I_N
I_{min}/I_{max} = 0
I2/I1 = 50 %
I_{sum} Difference= 1.0 x I_N

CTS conditions:
I_{set} High limit < = 1
I_{set} Low limit low < = 1
I_{set} Low limit high > = 1
I ratio < = 1
$I_{unbalance}$ ratio > = 1
I_{sum} Difference > = 1

When phase current wire is broken all of the conditions are met in the CTS and alarm shall be issued in case if the situation continues until the set alarming time is met.

Figure. 4.7.1 - 279. Broken primary phase current wiring.

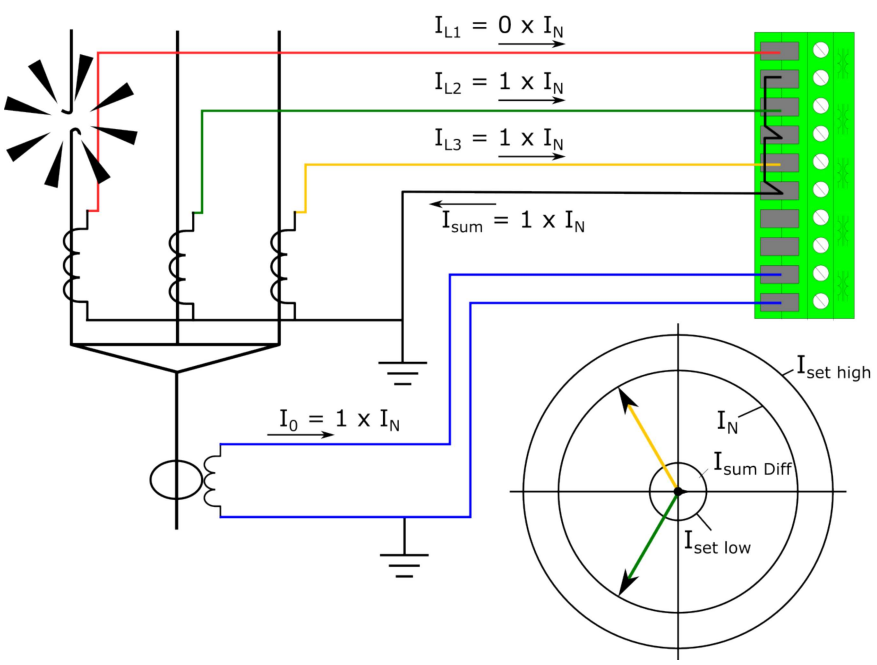

Settings:
I_{set} High limit = 1.20 x I_N
I_{set} Low limit = 0.10 x I_N
I_{set} ratio = 10.00 %
I1/I2 ratio = 49.00 %
I_0 input = I_{01}
I_{sum} Difference= 0.10 x I_N

Measurements:
I_{min} = 0 x I_N
I_{max} = 1 x I_N
I1 = 0.67 x I_N
I2 = 0.33 x I_N
I_{min}/I_{max} = 0
I2/I1 = 50 %
I_{sum} Difference= 0.0 x I_N

CTS conditions:
I_{set} High limit < = 1
I_{set} Low limit low < = 1
I_{set} Low limit high > = 1
I ratio < = 1
$I_{unbalance}$ ratio > = 1
I_{sum} Difference > = 0

In this example, all other condition are met except the residual difference. That is now 0 × I_n, which indicates a primary side fault.

© Arcteq Relays Ltd
IM00099

Figure. 4.7.1 - 280. Primary side high-impedance earth fault.

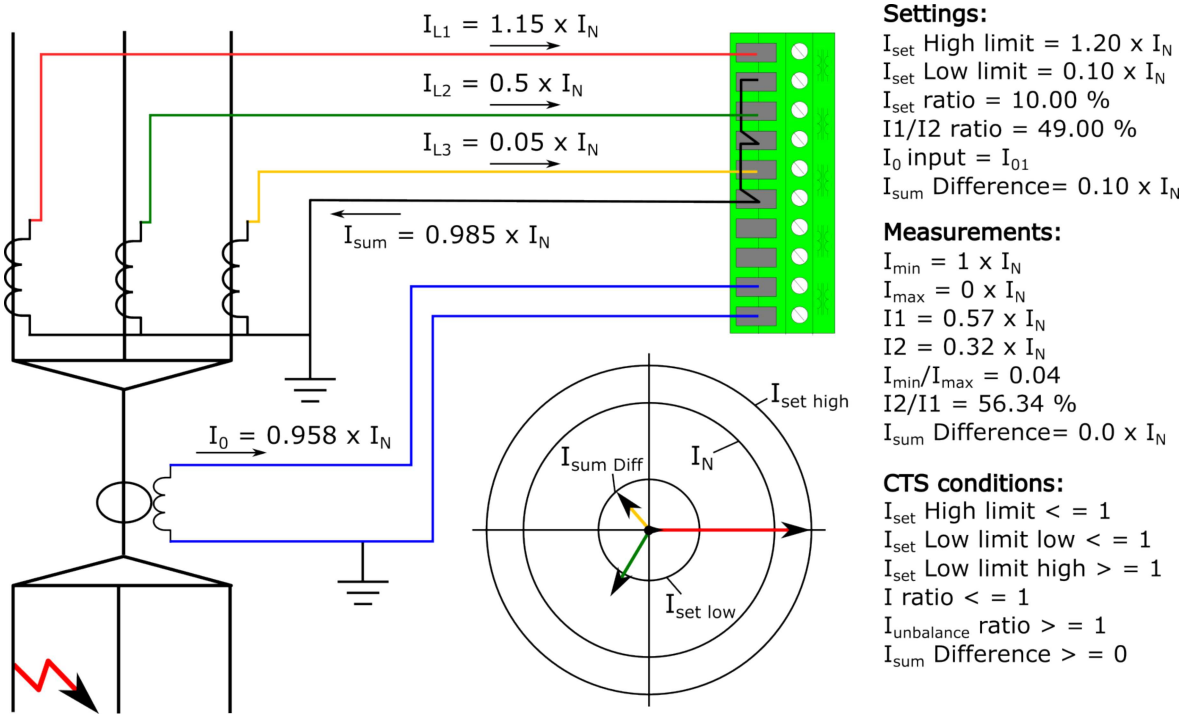

In this example there is a high-impedance earth fault. It does not activate the function, if the measurement conditions are met, while the calculated and measured residual current difference does not reach the limit. The *I_{sum} difference* setting should be set according to the application in order to reach maximum security and maximum sensitivity for the network earthing.

Events and registers

The current transformer supervision function (abbreviated "CTS" in event block names) generates events and registers from the status changes in the events listed below. The user can select which event messages are stored in the main event buffer: ON, OFF, or both.

The function's outputs can be used for direct I/O controlling and user logic programming. The function also provides a resettable cumulative counter for the CTS ALARM and BLOCKED events.

Table. 4.7.1 - 574. Event messages.

Event block name	Event names
CTS1	Alarm ON/OFF
CTS1	Block ON/OFF
CTS2	Alarm ON/OFF
CTS2	Block ON/OFF

The function registers its operation into the last twelve (12) time-stamped registers; this information is available for all provided instances separately. The register of the function records the ON event process data for ACTIVATED, BLOCKED, etc. The table below presents the structure of the function's register content.

Table. 4.7.1 - 575. Register content.

Register	Description
Date and time	dd.mm.yyyy hh:mm:ss.mss
Event	Event name
Trigger currents	The phase currents (L1, L2 & L3), the residual currents (I01 & I02), and the sequence currents (I1 & I2) on trigger time.
Time to CTSact	Time remaining before alarm activation.
Fault type	The status code of the monitored current.
Setting group in use	Setting group 1...8 active

4.7.2 Voltage transformer supervision (60)

Voltage transformer supervision is used to detect errors in the secondary circuit of the voltage transformer wiring and during fuse failure. This signal is mostly used as an alarming function or to disable functions that require adequate voltage measurement.

Figure. 4.7.2 - 281. Secondary circuit fault in phase L1 wiring.

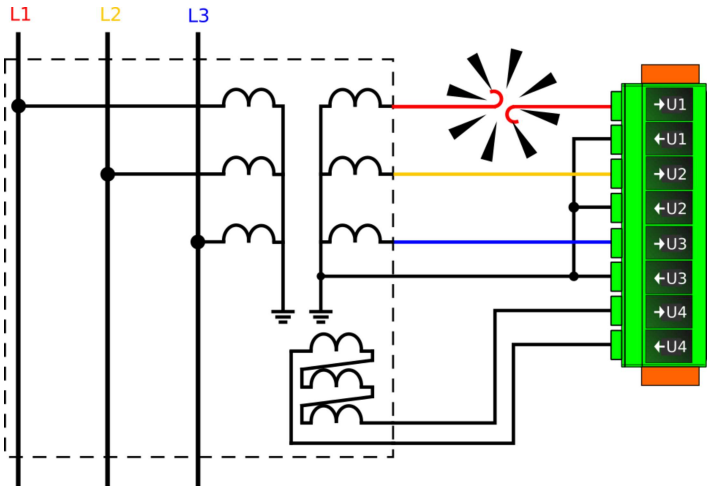

Measured input

The function block uses fundamental frequency component of voltage measurement channels. The function uses calculated positive, negative and zero sequence voltages. The function also monitors the angle of each voltage channel.

Table. 4.7.2 - 576. Measurement inputs of the voltage transformer supervision function.

Signal	Description
U_1RMS	Fundamental frequency component of U_1/V voltage measurement
U_2RMS	Fundamental frequency component of U_2/V voltage measurement
U_3RMS	Fundamental frequency component of U_3/V voltage measurement

© Arcteq Relays Ltd

Signal	Description
U_4RMS	Fundamental frequency component of U_4/V voltage measurement

General settings

The following general settings define the general behavior of the function. These settings are static i.e. it is not possible to change them by editing the setting group.

Table. 4.7.2 - 577. General settings of the function.

Name	Range	Default	Description
VTS LN mode	• On • Blocked • Test • Test/ Blocked • Off	On	Set mode of VTS block. This parameter is visible only when *Allow setting of individual LN mode* is enabled in *General* menu.
VTS force status to	• Normal • Start • VTLinefail • VTBusfail • Blocked	Normal	Force the status of the function. Visible only when *Enable stage forcing* parameter is enabled in *General* menu.

Pick-up settings

The *Voltage low pick-up* and *Voltage high detect* setting parameters control the voltage-dependent pick-up and activation of the voltage transformer supervision function. The function's pick-up activates, if at least one of the three voltages is under the set *Voltage low pick-up* value, or if at least two of the three voltages exceed the set *Voltage high detect* value. The function constantly calculates the ratio between the setting values and the measured magnitude for each of the three phases.

Setting group selection controls the operating characteristics of the function, i.e. the user or user-defined logic can change function parameters while the function is running.

Table. 4.7.2 - 578. Pick-up settings.

Name	Range	Step	Default	Description
Voltage low pickup	0.05…0.50×U_n	0.01×U_n	0.05×U_n	If one the measured voltages is below low pickup value and two of the measured voltages exceed high detect value the function's pick-up activates.
Voltage high detect	0.01…1.10×U_n	0.01×U_n	0.80×U_n	
Angle shift limit	2.00…90.00deg	0.10deg	5.00deg	If the difference between the present angle and the angle 40 ms before is above the set value, the function's pick-up is blocked.
Bus fuse fail check	• No • Yes	-	Yes	Selects whether or not the state of the bus fuse is supervised. The supervised signal is determined the "VTS MCB Trip bus" setting (*I/O → Fuse failure inputs*).

Name	Range	Step	Default	Description
Line fuse fail check	• No • Yes	-	Yes	Selects whether or not the state of the line fuse is supervised. The supervised signal is determined by the "VTS MCB Trip line" setting (*I/O → Fuse failure inputs*).

The voltage transformer supervision can also report several different states of the measured voltage. These can be seen in the function's *INFO* menu.

Name	Description
Bus dead	No voltages.
Bus Live VTS Ok	All of the voltages are within the set limits.
Bus Live VTS Ok SEQ Rev	All of the voltages are within the set limits **BUT** the voltages are in a reversed sequence.
Bus Live VTS Ok SEQ Undef	Voltages are within the set limits **BUT** the sequence cannot be defined.
Bus Live VTS problem	Any of the VTS pick-up conditions are met.

Read-only parameters

The function's *Info* page displays useful, real-time information on the state of the protection function. It is accessed either through the device's HMI display, or through the setting tool software when it is connected to the device and its Live Edit mode is active.

Table. 4.7.2 - 579. Information displayed by the function.

Name	Range	Step	Description
VTS LN behaviour	• On • Blocked • Test • Test/Blocked • Off	-	Displays the mode of VTS block. This parameter is visible only when *Allow setting of individual LN mode* is enabled in *General* menu.
VTS condition	• Normal • Start • VTLinefail • VTBusfail • Blocked	-	Displays status of the monitoring function.
Bus voltages	• Bus dead • Bus Live VTS Ok SEQ Ok • Bus Live VTS Ok SEQ Rev • Bus Live VTS Ok SEQ Undef • Bus Live VTS problem	-	Displays the status of bus voltages.

© Arcteq Relays Ltd
IM00099

Name	Range	Step	Description
Expected operating time	0.000...1800.000s	0.005s	Displays the expected operating time when a fault occurs.
Time remaining to trip	-1800.000...1800.000s	0.005s	When the function has detected a fault and counts down time towards a operation, this displays how much time is left before operation occurs.

Function blocking

The block signal is checked in the beginning of each program cycle. The blocking signal is received from the blocking matrix in the function's dedicated input. If the blocking signal is not activated when the pick-up element activates, a START signal is generated and the function proceeds to the time characteristics calculation.

If the blocking signal is active when the pick-up element activates, a BLOCKED signal is generated and the function does not process the situation further. If the START function has been activated before the blocking signal, it resets and the release time characteristics are processed similarly to when the pick-up signal is reset.

The variables the user can set are binary signals from the system. The blocking signal needs to reach the device minimum of 5 ms before the set operating delay has passed in order for the blocking to activate in time.

Operating time characteristics for activation

This function supports definite time delay (DT). For detailed information on these delay types please refer to the chapter "General properties of a protection function" and its section "Operating time characteristics".

Events and registers

The voltage transformer supervision function (abbreviated "VTS" in event block names) generates events and registers from the status changes in the events listed below. The user can select which event messages are stored in the main event buffer: ON, OFF, or both. The events triggered by the function are recorded with a time stamp.

The function's outputs can be used for direct I/O controlling and user logic programming. The function also provides a resettable cumulative counter for the START, ALARM BUS, ALARM LINE and BLOCKED events.

Table. 4.7.2 - 580. Event messages.

Event block name	Event names
VTS1	Bus VT fail Start ON/OFF
VTS1	Bus VT fail Trip ON/OFF
VTS1	Bus VT fail Block ON/OFF
VTS1	Line VT fail ON/OFF
VTS1	Bus Fuse fail ON/OFF
VTS1	Line Fuse fail ON/OFF

The function registers its operation into the last twelve (12) time-stamped registers. The register of the function records the ON event process data for ACTIVATED, BLOCKED, etc. The table below presents the structure of the function's register content.

Table. 4.7.2 - 581. Register content.

Register	Description
Date and time	dd.mm.yyyy hh:mm:ss.mss
Event	Event name
Volt 1, 2, 3, 4 status	• No voltage • Voltage OK • Low voltage
System status	• Bus dead • Bus live, VTS OK, Seq. OK • Bus live, VTS OK, Seq. reversed • Bus live, VTS OK, Seq. undefined • Bus live, VTS fault
Input A, B, C, D angle diff	0.00...360.00deg
Trip time remaining	Time remaining to alarm 0...1800s
Setting group in use	Setting group 1...8 active

4.7.3 Circuit breaker wear monitoring

The circuit breaker wear function is used for monitoring the circuit breaker's lifetime and its maintenance needs caused by interrupting currents and mechanical wear. The function uses the circuit breaker's manufacturer-supplied data for the breaker operating cycles in relation to the interrupted current magnitudes.

Figure. 4.7.3 - 282. Example of the circuit breaker interrupting life operations.

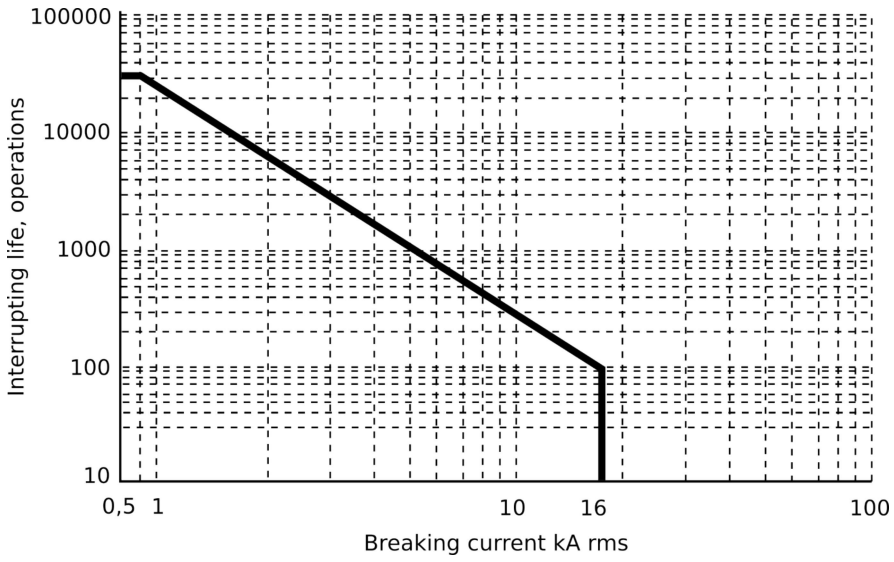

© Arcteq Relays Ltd
IM00099

The function is triggered from the circuit breaker's "Open" command output and it monitors the three-phase current values in both the tripping moment and the normal breaker opening moment. The maximum value of interrupting life operations for each phase is calculated from these currents. The value is cumulatively deducted from the starting operations starting value. The user can set up two separate alarm levels, which are activated when the value of interrupting life operations is below the setting limit. The "Trip contact" setting defines the output that triggers the current monitoring at the breaker's "Open" command.

Measured input

The function block uses fundamental frequency component of phase current measurement values.

Table. 4.7.3 - 582. Measurement inputs of the circuit breaker wear function.

Signal	Description
I_{L1}RMS	Fundamental frequency component of phase L1 (A) current
I_{L2}RMS	Fundamental frequency component of phase L2 (B) current
I_{L3}RMS	Fundamental frequency component of phase L3 (C) current

General settings

The following general settings define the general behavior of the function. These settings are static i.e. it is not possible to change them by switching the setting group.

Table. 4.7.3 - 583. General settings.

Name	Range	Default	Description
CBW LN mode	• On • Blocked • Test • Test/ Blocked • Off	On	Set mode of CBW block. This parameter is visible only when *Allow setting of individual LN mode* is enabled in *General* menu.
CBW force status to	• Normal • Alarm1 On • Alarm2 On	Normal	Force the status of the function. Visible only when *Enable stage forcing* parameter is enabled in *General* menu.
CBW in side	• Side 1 • Side 2 • Side 3	Side 1	Defines which current measurement module is used by the function.

Circuit breaker characteristics settings

The circuit breaker characteristics are set by two operating points, defined by the nominal breaking current, the maximum allowed breaking current and their respective operation settings. This data is provided by the circuit breaker's manufacturer.

Table. 4.7.3 - 584. Settings for circuit breaker characteristics.

Name	Range	Step	Default	Description
Operations 1	0…200 000	1	50 000	The number of interrupting life operations at the nominal current (Close - Open).
Operations 2	0…200 000	1	100	The number of interrupting life operations at the rated breaking current (Open).
Current 1 (I_{nom})	0…100.00kA	0.01kA	1kA	The rated normal current (RMS).
Current 2 (I_{max})	0…100.00kA	0.01kA	20kA	The rated short-circuit breaking current (RMS).

Pick-up settings

For the alarm stages Alarm 1 and Alarm 2, the user can set the pick-up level for the number of operations left. The pick-up setting is common for all phases and the alarm stage picks up if any of the phases goes below this setting.

Table. 4.7.3 - 585. Pick-up settings.

Name	Range	Default	Description
Alarm 1	• Disabled • Enabled	Disabled	Enable and disable the Alarm 1 stage.
Alarm 1 Set	0…200 000	1 000	Defines the pick-up threshold for remaining operations. When the number of remaining operations is below this setting, the ALARM 1 signal is activated.
Alarm 2	• Disabled • Enabled	Disabled	Enable and disable the Alarm 2 stage.
Alarm 2 Set	0…200 000	100	Defines the pick-up threshold for remaining operations. When the number of remaining operations is below this setting, the ALARM 2 signal is activated.

Setting example

Let us examine the settings, using a low-duty vacuum circuit breaker as an example. The image below presents the technical specifications provided by the manufacturer, with the data relevant to our settings highlighted in red:

© Arcteq Relays Ltd

Rated voltage, kV	24
Rated current, A	800
Rated power frequency test voltage, kV	50
Rated frequency, Hz	50/60
Rated impulse test voltage, kV peak	125
Partial discharge level at 1,1 rated voltage kV, pC	<10
Rated short-circuit breaking current, kA	16
Rated short-circuit making current, kA peak	41.5
Short time withstand current, 4s, kA	16
Mechanical life, CO cycles, not less than	30,000
Interrupting life operations, not less than	
at rated current	30,000
at breaking current	100
at other currents	see Fig.41
Closing time, ms, not more than	35
Opening time, ms, not more than	15
Breaking time, ms, not more than	25
Main contact resistance, μOhm, not more than	40
Maximum ambient temperature, C°	+55
Minimum ambient temperature, C°	-40
Design class (according to IEC 60932)	1
Electrical endurance class at rated IEEE/IEC duty	E2
Mechanical endurance class at rated IEEE/IEC duty	M2
Capacitive current switching class	C2
"Mechanical vibration and shock withstand capability, IEC 60721, IEC 60068"	Class 4M4
Maximum altitude above sea level, m	3000*
Maximum humidity, non condensing	98 %
Weight, kg - LD_1	35
Weight, kg - LD_6	55

Now, we set the stage as follows:

Parameter	Setting
Current 1	0.80 kA
Operation 1	30 000 operations
Current 2	16.00 kA
Operations 2	100 operations
Enable Alarm 1	Enabled
Alarm 1 Set	1000 operations
Enable Alarm 2	Enabled
Alarm 2 Set	100 operations

With these settings, Alarm 1 is issued when the cumulative interruption counter for any of the three phases dips below the set 1000 remaining operations ("Alarm 1 Set"). Similarly, when any of the counters dips below 100 remaining operations, Alarm 2 is issued.

Read-only parameters

The function's *Info* page displays useful, real-time information on the state of the protection function. It is accessed either through the device's HMI display, or through the setting tool software when it is connected to the device and its Live Edit mode is active.

Table. 4.7.3 - 586. Information displayed by the function.

Name	Range	Description
CBW LN behaviour	• On • Blocked • Test • Test/ Blocked • Off	Displays the mode of CBW block. This parameter is visible only when *Allow setting of individual LN mode* is enabled in *General* menu.
CBW condition	• Normal • Alarm1 On • Alarm2 On	Displays the status of the function.
Breaker operations	-	Cumulative counter of "open" operations.
Alarm 1 counter	-	Alarm 1 operation counter.
Alarm 2 counter	-	Alarm 2 operation counter.
L1 Operations left	-	Operations left for phase L1.
L2 Operations left	-	Operations left for phase L2.
L3 Operations left	-	Operations left for phase L3.

Events and registers

The circuit breaker wear function (abbreviated "CBW" in event block names) generates events and registers from the status changes in the events listed below. The user can select which event messages are stored in the main event buffer: ON, OFF, or both. The function's outputs can be used for direct I/O controlling and user logic programming. The events triggered by the function are recorded with a time stamp.

The function also provides a resettable cumulative counter for the "Open" operations as well as the ALARM 1 and ALARM 2 events.

© Arcteq Relays Ltd
IM00099

Table. 4.7.3 - 587. Event messages.

Event block name	Event names
CBW1	CBWEAR1 Triggered
CBW1	CBWEAR1 Alarm 1 ON/OFF
CBW1	CBWEAR1 Alarm 2 ON/OFF

The function registers its operation into the last twelve (12) time-stamped registers. The register of the function records the ON event process data. The table below presents the structure of the function's register content.

Table. 4.7.3 - 588. Register content.

Register	Description
Date and time	dd.mm.yyyy hh:mm:ss.mss
Event	Event name
Trigger current	Phase currents on trigger time
Deducted Op	L1/L2/L3 Deducted operations from the cumulative sum
Operations left	L1/L2/L3 Operations left

4.7.4 Current total harmonic distortion (THD)

The total harmonic distortion (THD) function is used for monitoring the content of the current harmonic. The THD is a measurement of the harmonic distortion present, and it is defined as the ratio between the sum of all harmonic components' powers and the power of the fundamental frequency (RMS).

Harmonics can be caused by different sources in electric networks such as electric machine drives, thyristor controls, etc. The function's monitoring of the currents can be used to alarm of the harmonic content rising too high; this can occur when there is an electric quality requirement in the protected unit, or when the harmonics generated by the process need to be monitored.

The function constantly measures the phase and residual current magnitudes as well as the harmonic content of the monitored signals up to the 31st harmonic component. When the function is activated, the measurements are also available for the mimic and the measurement views in the HMI carousel. The user can also set the alarming limits for each measured channel if the application so requires.

The monitoring of the measured signals can be selected to be based either on an amplitude ratio or on the above-mentioned power ratio. The difference is in the calculation formula (as shown below):

Figure. 4.7.4 - 283. THD calculation formulas.

$$THD_P = \frac{{I_{x2}}^2 + {I_{x3}}^2 + {I_{x4}}^2 \dots {I_{x31}}^2}{{I_{x1}}^2}$$

, where
I = measured current,
x= measurement input,
n = harmonic number

$$THD_A = \sqrt{\frac{{I_{x2}}^2 + {I_{x3}}^2 + {I_{x4}}^2 \dots {I_{x31}}^2}{{I_{x1}}^2}}$$

, where
I = measured current,
x= measurement input,
n = harmonic number

While both of these formulas exist, the power ratio (*THD*$_P$) is recognized by the IEEE, and the amplitude ratio (*THD*$_A$) is recognized by the IEC.

Measured input

The function block uses phase and residual current measurement channels. The function always uses FFT measurement of the whole harmonic specter of 32 components from each measured current channel. From these measurements the function calculates either the amplitude ratio or the power ratio.

Table. 4.7.4 - 589. Measurement inputs of the total harmonic distortion monitor function.

Signal	Description
I_{L1}FFT	FFT measurement of phase L1 (A) current
I_{L2}FFT	FFT measurement of phase L2 (B) current
I_{L3}FFT	FFT measurement of phase L3 (C) current
I_{01}FFT	FFT measurement of residual I01 current
I_{02}FFT	FFT measurement of residual I02 current

The selection of the calculation method is made with a setting parameter (common for all measurement channels).

General settings

The following general settings define the general behavior of the function. These settings are static i.e. it is not possible to change them by editing the setting group.

Table. 4.7.4 - 590. General settings.

Name	Range	Default	Description
THD> LN mode	• On • Blocked • Test • Test/ Blocked • Off	On	Set mode of THD block. This parameter is visible only when *Allow setting of individual LN mode* is enabled in *General* menu.
THD> in side	• CT1 • CT2	CT1	Defines which current measurement module the function uses.

© Arcteq Relays Ltd

Name	Range	Default	Description
Measurement magnitude	• Amplitude • Power	Amplitude	Defines which available measured magnitude the function uses.

Pick-up settings

The $Phase_{THD}$, $I01_{THD}$and $I02_{THD}$ setting parameters control the the pick-up and activation of the function. They define the maximum allowed measured current THD before action from the function. Before the function activates alarm signals, their corresponding pick-up elements need to be activated with the setting parameters *Enable phase THD alarm*, *Enable I01 THD alarm* and *Enable I02 THD alarm*. The function constantly calculates the ratio between the setting values and the calculated THD for each of the three phases. The reset ratio of 97 % is built into the function and is always relative to the setting value. The setting value is common for all measured phases. When the calculated THD exceeds the pick-up value (in single, dual or all phases), it triggers the pick-up operation of the function.

Setting group selection controls the operating characteristics of the function, i.e. the user or user-defined logic can change function parameters while the function is running.

Table. 4.7.4 - 591. Pick-up settings.

Name	Range	Step	Default	Description
Enable phase THD alarm	• Enabled • Disabled	-	Enabled	Enables and disables the THD alarm function from phase currents.
Enable I01 THD alarm	• Enabled • Disabled	-	Enabled	Enables and disables the THD alarm function from residual current input I01.
Enable I02 THD alarm	• Enabled • Disabled	-	Enabled	Enables and disables the THD alarm function from residual current input I02.
Phase THD pick-up	0.10…100.00%	0.01%	10.00%	The pick-up setting for the THD alarm element from the phase currents. At least one of the phases' measured THD value has to exceed this setting in order for the alarm signal to activate.
I01 THD pick-up	0.10…100.00%	0.01%	10.00%	The pick-up setting for the THD alarm element from the residual current I01. The measured THD value has to exceed this setting in order for the alarm signal to activate.
I02 THD pick-up	0.10…100.00%	0.01%	10.00%	The pick-up setting for the THD alarm element from the residual current I02. The measured THD value has to exceed this setting in order for the alarm signal to activate.

Read-only parameters

The function's *Info* page displays useful, real-time information on the state of the protection function. It is accessed either through the device's HMI display, or through the setting tool software when it is connected to the device and its Live Edit mode is active.

Table. 4.7.4 - 592. Information displayed by the function.

Name	Range	Description
THD> LN behaviour	• On • Blocked • Test • Test/ Blocked • Off	Displays the mode of THD block. This parameter is visible only when *Allow setting of individual LN mode* is enabled in *General* menu.
THD condition	• Normal • Start • Alarm • Blocked	Displays status of the monitoring function.

Function blocking

The block signal is checked in the beginning of each program cycle. The blocking signal is received from the blocking matrix in the function's dedicated input. If the blocking signal is not activated when the pick-up element activates, a START signal is generated and the function proceeds to the time characteristics calculation.

If the blocking signal is active when the pick-up element activates, a BLOCKED signal is generated and the function does not process the situation further. If the START function has been activated before the blocking signal, it resets and the release time characteristics are processed similarly to when the pick-up signal is reset.

The variables the user can set are binary signals from the system. The blocking signal needs to reach the device minimum of 5 ms before the set operating delay has passed in order for the blocking to activate in time.

Operating time characteristics for activation and reset

This function supports definite time delay (DT). The following table presents the setting parameters for the function's time characteristics.

Table. 4.7.4 - 593. Settings for operating time characteristics.

Name	Range	Step	Default	Description
Phase THD alarm delay	0.000…1800.000s	0.005s	10.000s	Defines the delay for the alarm timer from the phase currents' measured THD.
I01 THD alarm delay	0.000…1800.000s	0.005s	10.000s	Defines the delay for the alarm timer from the residual current I01's measured THD.
I02 THD alarm delay	0.000…1800.000s	0.005s	10.000s	Defines the delay for the alarm timer from the residual current I02's measured THD.

Events and registers

The total harmonic distortion monitor function (abbreviated "THD" in event block names) generates events and registers from the status changes in the events listed below. The user can select which event messages are stored in the main event buffer: ON, OFF, or both. The events triggered by the function are recorded with a time stamp.

© Arcteq Relays Ltd

The function's outputs can be used for direct I/O controlling and user logic programming. The function also provides a resettable cumulative counter for the START, ALARM and BLOCKED events.

Table. 4.7.4 - 594. Event messages.

Event block name	Event names
THD1	THD Start Phase ON/OFF
THD1	THD Start I01 ON/OFF
THD1	THD Start I02 ON/OFF
THD1	THD Alarm Phase ON/OFF
THD1	THD Alarm I01 ON/OFF
THD1	THD Alarm I02 ON/OFF
THD1	Blocked ON/OFF

The function registers its operation into the last twelve (12) time-stamped registers. The register of the function records the ON event process data for START, ALARM and BLOCKED. The table below presents the structure of the function's register content.

Table. 4.7.4 - 595. Register content.

Register	Description
Date and time	dd.mm.yyyy hh:mm:ss.mss
Event	Event name
L1h, L2h, L3h Fault THD	Start/Alarm THD of each phase.
Setting group in use	Setting group 1...8 active.

4.7.5 Voltage total harmonic distortion (THD)

The voltage total harmonic distortion (THD) function is used for monitoring the content of the voltage harmonic. The THD is a measurement of the harmonic distortion present, and it is defined as the ratio between the sum of all harmonic components' powers and the power of the fundamental frequency (RMS).

Harmonics can be caused by different sources in electric networks such as electric machine drives, thyristor controls, etc. The function's monitoring of the voltage can be used to alarm of the harmonic content rising too high; this can occur when there is an electric quality requirement in the protected unit, or when the harmonics generated by the process need to be monitored.

The function constantly measures the phase voltage magnitudes as well as the harmonic content of the monitored signals up to the 31st harmonic component. The user can set the alarming limits if the application so requires.

The monitoring of the measured signals can be selected to be based either on an amplitude ratio or on the above-mentioned power ratio. The difference is in the calculation formula (as shown below):

Figure. 4.7.5 - 284. THD calculation formulas.

$$THD_P = \frac{{U_{x2}}^2 + {U_{x3}}^2 + {U_{x4}}^2 \dots {U_{x31}}^2}{{U_{x1}}^2}$$

, where
U = measured voltage,
x= measurement input,
n = harmonic number

$$THD_A = \sqrt{\frac{{U_{x2}}^2 + {U_{x3}}^2 + {U_{x4}}^2 \dots {U_{x31}}^2}{{U_{x1}}^2}}$$

, where
U = measured voltage,
x= measurement input,
n = harmonic number

While both of these formulas exist, the power ratio (THD_P) is recognized by the IEEE, and the amplitude ratio (THD_A) is recognized by the IEC.

Measured input

The function block uses analog voltage measurement values. The function always uses FFT measurement of the whole harmonic specter of 32 components from each measured voltage channel. From these measurements the function calculates either the amplitude ratio or the power ratio.

Table. 4.7.5 - 596. Measurement inputs of the total harmonic distortion monitor function.

Signal	Description
U_1FFT	FFT measurement of U_1/V voltage channel
U_2FFT	FFT measurement of U_2/V voltage channel
U_3FFT	FFT measurement of U_3/V voltage channel

The selection of the calculation method is made with a setting parameter (common for all measurement channels).

General settings

The following general settings define the general behavior of the function. These settings are static i.e. it is not possible to change them by editing the setting group.

Table. 4.7.5 - 597. General settings.

Name	Range	Default	Description
THDV> LN mode	• On • Blocked • Test • Test/ Blocked • Off	On	Set mode of THDV block. This parameter is visible only when *Allow setting of individual LN mode* is enabled in *General* menu.
Measurement magnitude	• Amplitude • Power	Amplitude	Defines which available measured magnitude the function uses.

© Arcteq Relays Ltd

Pick-up settings

The THDV pick-up setting parameter controls the the pick-up and activation of the function. They define the maximum allowed measured voltage THD before action from the function. Before the function activates alarm signals, their corresponding pick-up elements need to be activated with the setting parameter *Enable THD alarm*. The function constantly calculates the ratio between the setting values and the calculated voltage THD. The reset ratio of 97 % is built into the function and is always relative to the setting value. The setting value is common for all measured phases. When the calculated THD exceeds the pick-up value (in single, dual or all phases), it triggers the pick-up operation of the function.

Setting group selection controls the operating characteristics of the function, i.e. the user or user-defined logic can change function parameters while the function is running.

Table. 4.7.5 - 598. Pick-up settings.

Name	Range	Step	Default	Description
Enable THDV alarm	• Enabled • Disabled	-	Enabled	Enables and disables the THD alarm function.
THDV pick-up	0.10…100.00%	0.01%	10.00%	The pick-up setting for the THD alarm element from the phase voltages. At least one of the phases' measured THD value has to exceed this setting in order for the alarm signal to activate.

Read-only parameters

The function's *Info* page displays useful, real-time information on the state of the protection function. It is accessed either through the device's HMI display, or through the setting tool software when it is connected to the device and its Live Edit mode is active.

Table. 4.7.5 - 599. Information displayed by the function.

Name	Range	Description
THDV> LN behaviour	• On • Blocked • Test • Test/ Blocked • Off	Displays the mode of THDV block. This parameter is visible only when *Allow setting of individual LN mode* is enabled in *General* menu.
THDV condition	• Normal • Start • Alarm • Blocked	Displays status of the monitoring function.

Function blocking

The block signal is checked in the beginning of each program cycle. The blocking signal is received from the blocking matrix in the function's dedicated input. If the blocking signal is not activated when the pick-up element activates, a START signal is generated and the function proceeds to the time characteristics calculation.

If the blocking signal is active when the pick-up element activates, a BLOCKED signal is generated and the function does not process the situation further. If the START function has been activated before the blocking signal, it resets and the release time characteristics are processed similarly to when the pick-up signal is reset.

The variables the user can set are binary signals from the system. The blocking signal needs to reach the device minimum of 5 ms before the set operating delay has passed in order for the blocking to activate in time.

Operating time characteristics for activation and reset

This function supports definite time delay (DT). The following table presents the setting parameters for the function's time characteristics.

Table. 4.7.5 - 600. Settings for operating time characteristics.

Name	Range	Step	Default	Description
THDV alarm delay	0.000…1800.000s	0.005s	10.000s	Defines the delay for the alarm timer from the phase voltages' measured THD.

Events and registers

The voltage total harmonic distortion monitor function (abbreviated "THDV" in event block names) generates events and registers from the status changes in the events listed below. The user can select which event messages are stored in the main event buffer: ON, OFF, or both. The events triggered by the function are recorded with a time stamp.

The function's outputs can be used for direct I/O controlling and user logic programming. The function also provides a resettable cumulative counter for the START, ALARM and BLOCKED events.

Table. 4.7.5 - 601. Event messages.

Event block name	Event names
THDV1	Voltage THD Start ON/OFF
THDV1	Voltage THD Alarm ON/OFF
THDV1	Voltage Blocked ON/OFF

The function registers its operation into the last twelve (12) time-stamped registers. The register of the function records the ON event process data for START, ALARM and BLOCKED. The table below presents the structure of the function's register content.

Table. 4.7.5 - 602. Register content.

Register	Description
Date and time	dd.mm.yyyy hh:mm:ss.mss
Event	Event name
UL1, UL2, UL3 THDV	Start/Alarm Voltage THD of each phase.
Setting group in use	Setting group 1...8 active.

© Arcteq Relays Ltd
IM00099

4.7.6 Fault locator (21FL)

The fault locator function is used for recording an estimated distance to the point where a fault has occurred. It is mostly used in directional overcurrent protection or distance protection applications but can be also triggered by other protections. The function can be used if all three phase currents and three phase voltages have been connected to the device. The triggering signals, the triggering current and "Reactance per km" must be set in the configuration.

Measured input

Function block uses fundamental frequency component of current and voltage measurements to calculate phase-to-phase or phase-to-ground loop impedances.

Table. 4.7.6 - 603. Measurement inputs of the 21FL function.

Signal	Description
I_{L1}RMS	Fundamental frequency component of phase L1 (A) current measurement
I_{L2}RMS	Fundamental frequency component of phase L2 (B) current measurement
I_{L3}RMS	Fundamental frequency component of phase L3 (C) current measurement
U_1RMS	Fundamental frequency component of U_1/V voltage measurement
U_2RMS	Fundamental frequency component of U_2/V voltage measurement
U_3RMS	Fundamental frequency component of U_3/V voltage measurement
U_4RMS	Fundamental frequency component of U_4/V voltage measurement

Fault locator triggering

The "Trig fault locator" input defines which signal triggers the fault locator. This can be any binary signal generated by the unit. Typically, a TRIP signal of a protection function or the "Open" status of the breaker is used as the triggering input.

Several conditions have to be met before the fault locator can trigger and record the distance to a fault. First, when receiving a triggering signal, the function checks if the calculation is blocked. The calculation blocking signals are determined by the "Block calculation" matrix set by the user. Next, the function checks if any phase-to-earth voltages are available. If there are no available voltages, the function can only record phase-to-phase impedance loops. If there are available voltages, the function can also record phase-to-neutral impedance loops. Depending on the measured phase currents at the moment the triggering signal was received, the recorded impedance loop is selected from the available options. See the table "Required current conditions" for more information on which conditions have to be met to trigger impedance recording.

Setting group selection controls the operating characteristics of the function, i.e. the user or user-defined logic can change function parameters while the function is running.

Table. 4.7.6 - 604. Pick-up settings.

Name	Range	Step	Default	Description
Trigger current>	0.0…40.0×I_n	0.1×I_n	1×I_n	Sets the trigger current. Affects which impedance loop is recorded, if anything is recorded at all (see the table below).

Name	Range	Step	Default	Description
Reactance per km	0.000…5.000Ω/km	0.001Ω/km	0.125Ω/km	This setting is used for calculating the distance to a fault. Primary ohm value.

Table. 4.7.6 - 605. Required current conditions.

Currents over limit	P-E voltages available	P-E voltages not available
	Recorded impedance	
I_{L1}, I_{L2}, I_{L3}	X_{L12}	X_{L12}
I_{L1}, I_{L2}	X_{L12}	X_{L12}
I_{L2}, I_{L3}	X_{L23}	X_{L23}
I_{L1}, I_{L3}	X_{L31}	X_{L31}
I_{L1}	X_{L1}	No trigger
I_{L2}	X_{L2}	No trigger
I_{L3}	X_{L3}	No trigger

If no current measurement requirements are fulfilled when the function receives a triggering signal, the function will not record impedance at all.

Function blocking

The block signal is checked in the beginning of each program cycle. The blocking signal is received from the blocking matrix in the function's dedicated input. If the blocking signal is active when the pick-up element activates, a BLOCKED signal is generated and the function does not process the situation further.

The variables the user can set are binary signals from the system. The blocking signal needs to reach the device minimum of 5 ms before the set operating delay has passed in order for the blocking to activate in time.

Events

The fault locator function (abbreviated "FLX" in event block names) generates events and registers from the status changes in the events listed below. The user can select which event messages are stored in the main event buffer: ON, OFF, or both. The events triggered by the function are recorded with a time stamp. The function also provides a resettable cumulative counter for the fault locator triggering events.

Table. 4.7.6 - 606. Event messages.

Event block name	Event names
FLX1	Flocator triggered ON/OFF
FLX1	Flocator Calculation ON/OFF

The function registers its operation into the last twelve (12) time-stamped registers. The table below presents the structure of the function's register content.

© Arcteq Relays Ltd

Table. 4.7.6 - 607. Register content.

Register	Description
Date and time	dd.mm.yyyy hh:mm:ss.mss
Event	Event name
Fault type	• L1-L2 • L2-L3 • L3-L1 • L1-N • L2-N • L3-N • L1-L2-L3
Fault direction	• Not detected • Forward • Reverse
Fault reactance	In ohms (Ω)
Fault current	In per-unit value
Fault current	In primary value
Fault distance	In kilometers (km)
Setting group in use	Setting group 1...8 active.

4.7.7 Running hour counter

The running hour counter (abbreviated "RHC" in event block names) is capable of counting the running time of a motor, a generator, or a similar application.

The counter value can be added to the mimic view and read to SCADA.

Table. 4.7.7 - 608. Parameter descriptions

Name	Range	Description
Activate counter input	Any binary input	Counter runs whenever input set here is active.
Running hours	hh:mm:ss	Indicates running hours counted so far. This value can be edited by the user. The user input must be set in seconds, which is then converted by the device to hours, minutes and seconds (hh:mm:ss).
Start count	0...4294967295 Starts	Start counter.
Clear hours	• - • Clear	Clears "Running hours" and "Start count".

The function (abbreviated "RHC" in event block names) generates events from the status changes in the events listed below. The user can select which event messages are stored in the main event buffer: ON, OFF, or both. The events triggered by the function are recorded with a time stamp.

Table. 4.7.7 - 609. Event messages.

Event block name	Event name
RHC1	Running hour counter ON/OFF
RHC1	Running hour counter cleared ON/OFF

4.7.8 Measurement recorder

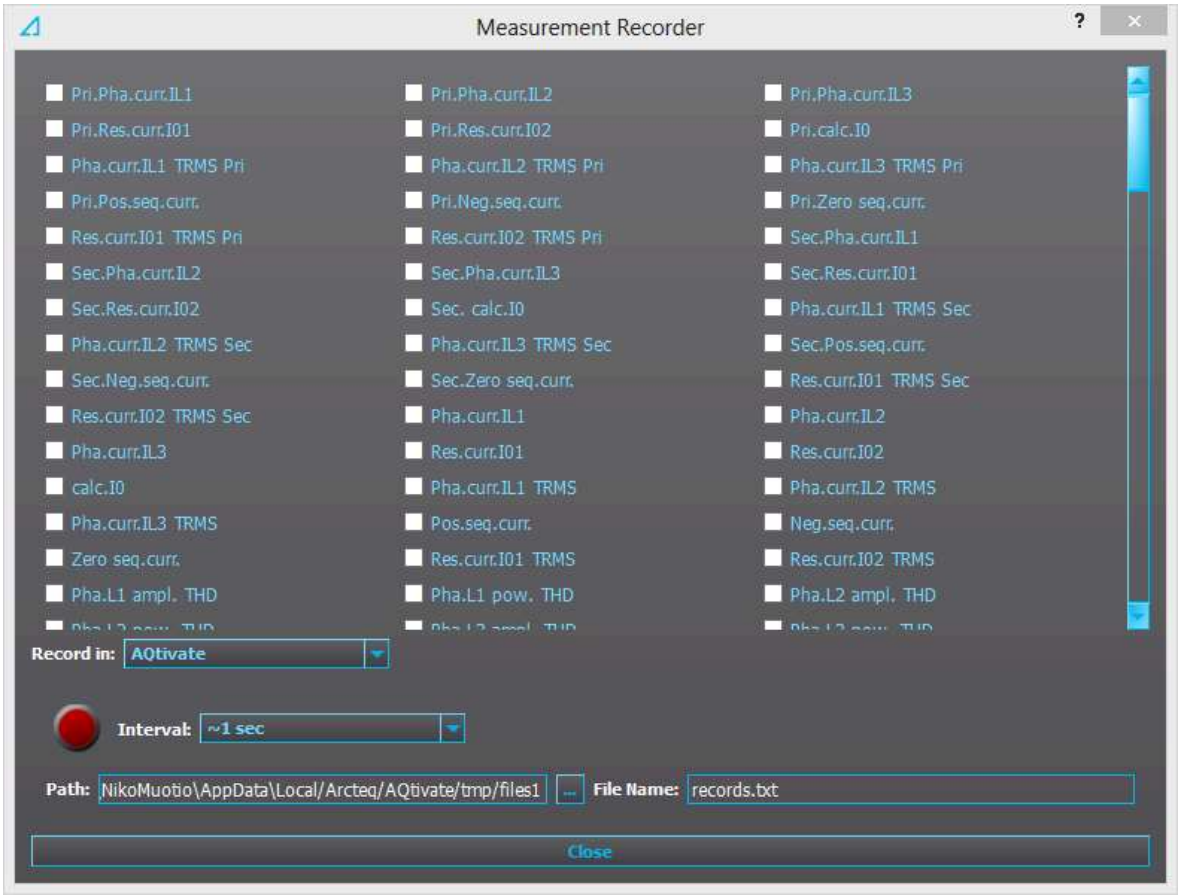

Measurements can be recorded to a file with the measurement recorder. The chosen measurements are recorded at selected intervals. In the "Measurement recorder" window, the measurements the user wants to be recorded can be selected by checking their respective check boxes. In order for the measurement recorder to activate, a connection to a device must be established via the setting tool software and its Live Edit mode must be enabled (see the setting tool manual for more information). Navigate to the measurement recorder through *Tools → Miscellaneous tools → Measurement recorder*. The recording interval can be changed from the "Interval" drop-down menu. From the "Record in" drop-down menu the user can also choose whether the measurements are recorded in the setting tool or in the device.

© Arcteq Relays Ltd

If the recording is done in the setting tool, both the setting tool software and its Live Edit mode have to be activated. The user can change the recording file location by editing the "Path" field. File names can also be changed with the "File name" field. Hitting the "Record" button (the big red circle) starts the recorder. Please note that closing the "Measurement recorder" window does not stop the recording; that can only be done by hitting the "Stop" button (the big blue circle).

If the recording is done in the device, only the recording interval needs to be set before recording can be started. The setting tool estimates the maximum recording time, which depends on the recording interval. When the measurement recorder is running, the measurements can be viewed in graph form with the AQtivate PRO software (see the image below).

Figure. 4.7.8 - 285. Measurement recorder values viewed with AQtivate PRO.

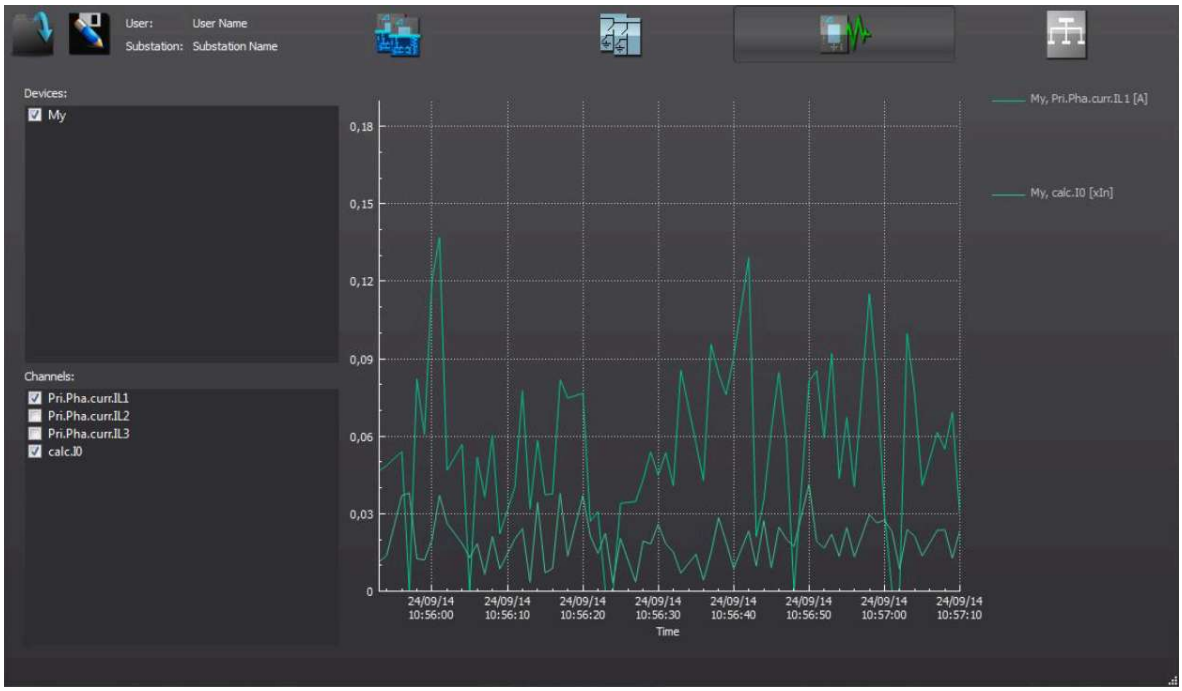

Table. 4.7.8 - 610. Available analog signals.

Current measurements	P-P Curr.I”L3	L1 Imp.React.Ind.E.Mvarh
Pri.Pha.Curr.IL1	P-P Curr.I”01	L1 Imp.React.Ind.E.kvarh
Pri.Pha.Curr.IL2	P-P Curr.I”02	L1 Exp/Imp React.Ind.E.bal.Mvarh
Pri.Pha.Curr.IL3	Pha.angle I”L1	L1 Exp/Imp React.Ind.E.bal.kvarh
Pri.Res.Curr.I01	Pha.angle I”L2	L2 Exp.Active Energy MWh
Pri.Res.Curr.I02	Pha.angle I”L3	L2 Exp.Active Energy kWh
Pri.Calc.I0	Res.Curr.angle I”01	L2 Imp.Active Energy MWh
Pha.Curr.IL1 TRMS Pri	Res.Curr.angle I”02	L2 Imp.Active Energy kWh
Pha.Curr.IL2 TRMS Pri	Calc.I”0.angle	L2 Exp/Imp Act. E balance MWh
Pha.Curr.IL3 TRMS Pri	I” Pos.Seq.Curr.angle	L2 Exp/Imp Act. E balance kWh
Pri.Pos.Seq.Curr.	I” Neg.Seq.Curr.angle	L2 Exp.React.Cap.E.Mvarh

Pri.Neg.Seq.Curr.	I" Zero.Seq.Curr.angle	L2 Exp.React.Cap.E.kvarh
Pri.Zero.Seq.Curr.	Voltage measurements	L2 Imp.React.Cap.E.Mvarh
Res.Curr.I01 TRMS Pri	U1Volt Pri	L2 Imp.React.Cap.E.kvarh
Res.Curr.I02 TRMS Pri	U2Volt Pri	L2 Exp/Imp React.Cap.E.bal.Mvarh
Sec.Pha.Curr.IL1	U3Volt Pri	L2 Exp/Imp React.Cap.E.bal.kvarh
Sec.Pha.Curr.IL2	U4Volt Pri	L2 Exp.React.Ind.E.Mvarh
Sec.Pha.Curr.IL3	U1Volt Pri TRMS	L2 Exp.React.Ind.E.kvarh
Sec.Res.Curr.I01	U2Volt Pri TRMS	L2 Imp.React.Ind.E.Mvarh
Sec.Res.Curr.I02	U3Volt Pri TRMS	L2 Imp.React.Ind.E.kvarh
Sec.Calc.I0	U4Volt Pri TRMS	L2 Exp/Imp React.Ind.E.bal.Mvarh
Pha.Curr.IL1 TRMS Sec	Pos.Seq.Volt.Pri	L2 Exp/Imp React.Ind.E.bal.kvarh
Pha.Curr.IL2 TRMS Sec	Neg.Seq.Volt.Pri	L3 Exp.Active Energy MWh
Pha.Curr.IL3 TRMS Sec	Zero.Seq.Volt.Pri	L3 Exp.Active Energy kWh
Sec.Pos.Seq.Curr.	U1Volt Sec	L3 Imp.Active Energy MWh
Sec.Neg.Seq.Curr.	U2Volt Sec	L3 Imp.Active Energy kWh
Sec.Zero.Seq.Curr.	U3Volt Sec	L3 Exp/Imp Act. E balance MWh
Res.Curr.I01 TRMS Sec	U4Volt Sec	L3 Exp/Imp Act. E balance kWh
Res.Curr.I02 TRMS Sec	U1Volt Sec TRMS	L3 Exp.React.Cap.E.Mvarh
Pha.Curr.IL1	U2Volt Sec TRMS	L3 Exp.React.Cap.E.kvarh
Pha.Curr.IL2	U3Volt Sec TRMS	L3 Imp.React.Cap.E.Mvarh
Pha.Curr.IL3	U4Volt Sec TRMS	L3 Imp.React.Cap.E.kvarh
Res.Curr.I01	Pos.Seq.Volt.Sec	L3 Exp/Imp React.Cap.E.bal.Mvarh
Res.Curr.I02	Neg.Seq.Volt.Sec	L3 Exp/Imp React.Cap.E.bal.kvarh
Calc.I0	Zero.Seq.Volt.Sec	L3 Exp.React.Ind.E.Mvarh
Pha.Curr.IL1 TRMS	U1Volt p.u.	L3 Exp.React.Ind.E.kvarh
Pha.Curr.IL2 TRMS	U2Volt p.u.	L3 Imp.React.Ind.E.Mvarh
Pha.Curr.IL3 TRMS	U3Volt p.u.	L3 Imp.React.Ind.E.kvarh
Pos.Seq.Curr.	U4Volt p.u.	L3 Exp/Imp React.Ind.E.bal.Mvarh
Neg.Seq.Curr.	U1Volt TRMS p.u.	L3 Exp/Imp React.Ind.E.bal.kvarh
Zero.Seq.Curr.	U2Volt TRMS p.u.	Exp.Active Energy MWh
Res.Curr.I01 TRMS	U3Volt p.u.	Exp.Active Energy kWh
Res.Curr.I02 TRMS	U4Volt p.u.	Imp.Active Energy MWh

© Arcteq Relays Ltd
IM00099

Pha.L1 ampl. THD	Pos.Seq.Volt. p.u.	Imp.Active Energy kWh
Pha.L2 ampl. THD	Neg.Seq.Volt. p.u.	Exp/Imp Act. E balance MWh
Pha.L3 ampl. THD	Zero.Seq.Volt. p.u.	Exp/Imp Act. E balance kWh
Pha.L1 pow. THD	U1Volt Angle	Exp.React.Cap.E.Mvarh
Pha.L2 pow. THD	U2Volt Angle	Exp.React.Cap.E.kvarh
Pha.L3 pow. THD	U3Volt Angle	Imp.React.Cap.E.Mvarh
Res.I01 ampl. THD	U4Volt Angle	Imp.React.Cap.E.kvarh
Res.I01 pow. THD	Pos.Seq.Volt. Angle	Exp/Imp React.Cap.E.bal.Mvarh
Res.I02 ampl. THD	Neg.Seq.Volt. Angle	Exp/Imp React.Cap.E.bal.kvarh
Res.I02 pow. THD	Zero.Seq.Volt. Angle	Exp.React.Ind.E.Mvarh
P-P Curr.IL1	System Volt UL12 mag	Exp.React.Ind.E.kvarh
P-P Curr.IL2	System Volt UL12 mag (kV)	Imp.React.Ind.E.Mvarh
P-P Curr.IL3	System Volt UL23 mag	Imp.React.Ind.E.kvarh
P-P Curr.I01	System Volt UL23 mag (kV)	Exp/Imp React.Ind.E.bal.Mvarh
P-P Curr.I02	System Volt UL31 mag	Exp/Imp React.Ind.E.bal.kvarh
Pha.angle IL1	System Volt UL31 mag (kV)	Other measurements
Pha.angle IL2	System Volt UL1 mag	TM> Trip expect mode
Pha.angle IL3	System Volt UL1 mag (kV)	TM> Time to 100% T
Res.Curr.angle I01	System Volt UL2 mag	TM> Reference T curr.
Res.Curr.angle I02	System Volt UL2 mag (kV)	TM> Active meas curr.
Calc.I0.angle	System Volt UL3 mag	TM> T est.with act. curr.
Pos.Seq.Curr.angle	System Volt UL3 mag (kV)	TM> T at the moment
Neg.Seq.Curr.angle	System Volt U0 mag	TM> Max.Temp.Rise All.
Zero.Seq.Curr.angle	System Volt U0 mag (kV)	TM> Temp.Rise atm.
Pri.Pha.Curr.I"L1	System Volt U1 mag	TM> Hot Spot estimate
Pri.Pha.Curr.I"L2	System Volt U1 mag (kV)	TM> Hot Spot Max. All
Pri.Pha.Curr.I"L3	System Volt U2 mag	TM> Used k for amb.temp
Pri.Res.Curr.I"01	System Volt U2 mag (kV)	TM> Trip delay remaining
Pri.Res.Curr.I"02	System Volt U3 mag	TM> Alarm 1 time to rel.
Pri.Calc.I"0	System Volt U3 mag (kV)	TM> Alarm 2 time to rel.
Pha.Curr.I"L1 TRMS Pri	System Volt U4 mag	TM> Inhibit time to rel.
Pha.Curr.I"L2 TRMS Pri	System Volt U4 mag (kV)	TM> Trip time to rel.

Pha.Curr.I"L3 TRMS Pri	System Volt UL12 ang	S1 Measurement
I" Pri.Pos.Seq.Curr.	System Volt UL23 ang	S2 Measurement
I" Pri.Neg.Seq.Curr.	System Volt UL31 ang	S3 Measurement
I" Pri.Zero.Seq.Curr.	System Volt UL1 ang	S4 Measurement
Res.Curr.I"01 TRMS Pri	System Volt UL2 ang	S5 Measurement
Res.Curr.I"02 TRMS Pri	System Volt UL3 ang	S6 Measurement
Sec.Pha.Curr.I"L1	System Volt U0 ang	S7 Measurement
Sec.Pha.Curr.I"L2	System Volt U1 ang	S8 Measurement
Sec.Pha.Curr.I"L3	System Volt U2 ang	S9 Measurement
Sec.Res.Curr.I"01	System Volt U3 ang	S10 Measurement
Sec.Res.Curr.I"02	System Volt U4 ang	S11 Measurement
Sec.Calc.I"0	Power measurements	S12 Measurement
Pha.Curr.I"L1 TRMS Sec	L1 Apparent Power (S)	Sys.meas.frqs
Pha.Curr.I"L2 TRMS Sec	L1 Active Power (P)	f atm.
Pha.Curr.I"L3 TRMS Sec	L1 Reactive Power (Q)	f meas from
I" Sec.Pos.Seq.Curr.	L1 Tan(phi)	SS1.meas.frqs
I" Sec.Neg.Seq.Curr.	L1 Cos(phi)	SS1f meas from
I" Sec.Zero.Seq.Curr.	L2 Apparent Power (S)	SS2 meas.frqs
Res.Curr.I"01 TRMS Sec	L2 Active Power (P)	SS2f meas from
Res.Curr.I"02 TRMS Sec	L2 Reactive Power (Q)	L1 Bias current
Pha.Curr.I"L1	L2 Tan(phi)	L1 Diff current
Pha.Curr.I"L2	L2 Cos(phi)	L1 Char current
Pha.Curr.I"L3	L3 Apparent Power (S)	L2 Bias current
Res.Curr.I"01	L3 Active Power (P)	L2 Diff current
Res.Curr.I"02	L3 Reactive Power (Q)	L2 Char current
Calc.I"0	L3 Tan(phi)	L3 Bias current
Pha.Curr.I"L1 TRMS	L3 Cos(phi)	L3 Diff current
Pha.Curr.I"L2 TRMS	3PH Apparent Power (S)	L3 Char current
Pha.Curr.I"L3 TRMS	3PH Active Power (P)	HV I0d> Bias current
I" Pos.Seq.Curr.	3PH Reactive Power (Q)	HV I0d> Diff current
I" Neg.Seq.Curr.	3PH Tan(phi)	HV I0d> Char current
I" Zero.Seq.Curr.	3PH Cos(phi)	LV I0d> Bias current

© Arcteq Relays Ltd

Res.Curr.I"01 TRMS	Energy measurements	LV I0d> Diff current
Res.Curr.I"02 TRMS	L1 Exp.Active Energy MWh	LV I0d> Char current
Pha.IL"1 ampl. THD	L1 Exp.Active Energy kWh	Curve1 Input
Pha.IL"2 ampl. THD	L1 Imp.Active Energy MWh	Curve1 Output
Pha.IL"3 ampl. THD	L1 Imp.Active Energy kWh	Curve2 Input
Pha.IL"1 pow. THD	L1 Exp/Imp Act. E balance MWh	Curve2 Output
Pha.IL"2 pow. THD	L1 Exp/Imp Act. E balance kWh	Curve3 Input
Pha.IL"3 pow. THD	L1 Exp.React.Cap.E.Mvarh	Curve3 Output
Res.I"01 ampl. THD	L1 Exp.React.Cap.E.kvarh	Curve4 Input
Res.I"01 pow. THD	L1 Imp.React.Cap.E.Mvarh	Curve4 Output
Res.I"02 ampl. THD	L1 Imp.React.Cap.E.kvarh	Control mode
Res.I"02 pow. THD	L1 Exp/Imp React.Cap.E.bal.Mvarh	Motor status
P-P Curr.I"L1	L1 Exp/Imp React.Cap.E.bal.kvarh	Active setting group
P-P Curr.I"L2	L1 Exp.React.Ind.E.Mvarh	
	L1 Exp.React.Ind.E.kvarh	

4.7.9 Fault register

The fault register function records the value of the selected magnitudes at the time of a pre-defined trigger signal. A typical application is the recording of fault currents or voltages at the time of the breaker trips; it can also be used to record the values from any trigger signal set by the user. The user can select whether the function records per-unit values or primary values. Additionally, the user can set the function to record overcurrent fault types or voltage fault types. The function operates instantly from the trigger signal.

The fault register function has an integrated fault display which shows the current fault values when the tripped by one of the following functions:

- I> (non-directional overcurrent)
- I2> (current unbalance)
- Idir> (directional overcurrent)
- I0> (non-directional earth fault)
- I0dir> (directional earth fault)
- f<(underfrequency)
- f> (overfrequency)
- U< (undervoltage)
- U> (overvoltage)
- U1/U2 >/< (sequence voltage)
- U0> (residual voltage)
- P> (over power)
- P< (under power)
- Prev> (reverse power)
- T> (thermal overload)

Figure. 4.7.9 - 286. 12 latest recordings can be accessed from HMI if "VrecRegisters" view has been enabled in "Carousel designer" tool.

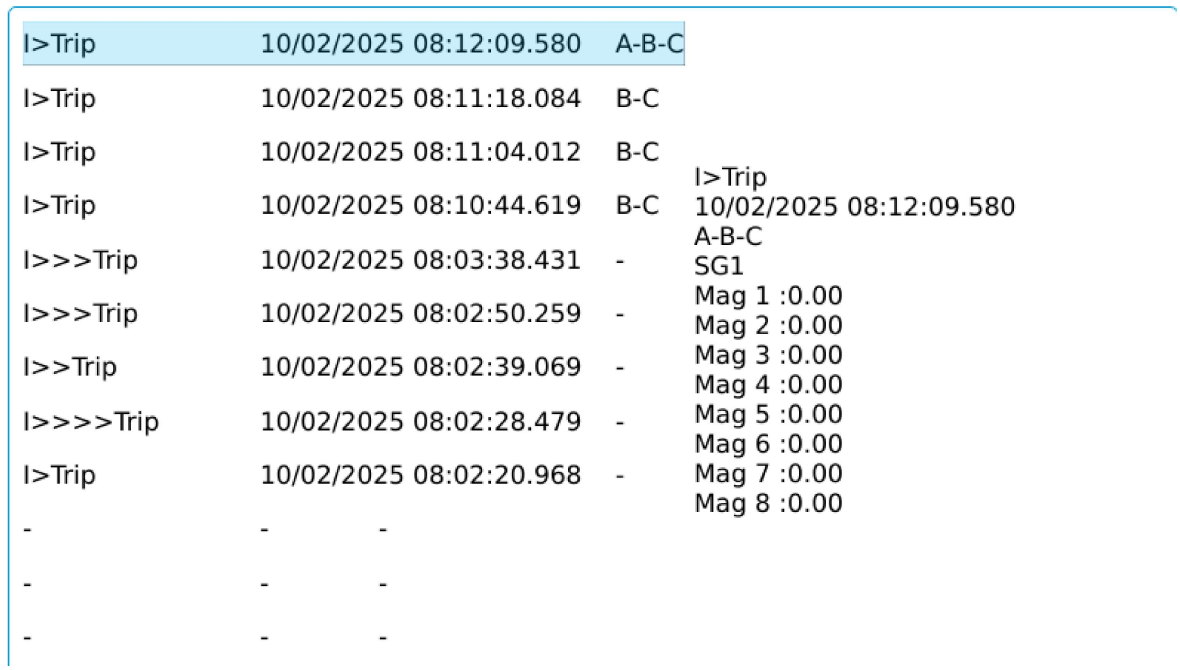

Measured input

The function block uses analog current and voltage measurement values. Based on these values, the device calculates the primary and secondary values of currents, voltages, powers, and impedances as well as other values.

The user can set up to eight (8) magnitudes to be recorded when the function is triggered. An overcurrent fault type, a voltage fault type, and a tripped stage can be recorded and reported straight to SCADA.

NOTICE!
The available measurement values depend on the device type. If only current analog measurements are available, the recorder can solely use signals which only use current. The same applies, if only voltage analog measurements are available.

Table. 4.7.9 - 611. Current based measurements available.

Currents	Description
IL1 (ff), IL2 (ff), IL3 (ff), I01 (ff), I02 (ff)	The fundamental frequency current measurement values (RMS) of phase currents and of residual currents.
IL1TRMS, IL2TRMS, IL3TRMS, I01TRMS, I02TRMS	The TRMS current measurement values of phase currents and of residual currents.
IL1,2,3 & I01/I02 2nd h., 3rd h., 4th h., 5th h., 7th h., 9th h., 11th h., 13th h., 15th h., 17th h., 19th h.	The magnitudes of phase current components: Fundamental, 2nd harmonic, 3rd harmonic, 4th harmonic, 5th harmonic 7th, harmonic 9th, harmonic 11th, harmonic 13th, harmonic 15th, harmonic 17th, harmonic 19th harmonic current.
I1, I2, I0Z	The positive sequence current, the negative sequence current and the zero sequence current.

© Arcteq Relays Ltd

I0CalcMag	The residual current calculated from phase currents.
IL1Ang, IL2Ang, IL3Ang, I01Ang, I02Ang, I0CalcAng, I1Ang, I2Ang	The angles of each measured current.

Table. 4.7.9 - 612. Voltage based measurements available.

Voltages	Description
UL1Mag, UL2Mag, UL3Mag, UL12Mag, UL23Mag, UL31Mag U0Mag, U0CalcMag	The magnitudes of phase voltages, of phase-to-phase voltages, and of residual voltages.
U1 Pos.seq V mag, U2 Neg.seq V mag	The positive sequence voltage and the negative sequence voltage.
UL1Ang, UL2Ang, UL3Ang, UL12Ang, UL23Ang, UL31Ang U0Ang, U0CalcAng	The angles of phase voltages, of phase-to-phase voltages, and of residual voltages.
U1 Pos.seq V Ang, U2 Neg.seq V Ang	The positive sequence angle and the negative sequence angle.

Table. 4.7.9 - 613. Power based measurements available.

Powers	Description
S3PH, P3PH, Q3PH	The three-phase apparent, active and reactive powers.
SL1, SL2, SL3, PL1, PL2, PL3, QL1, QL2, QL3	The phase apparent, active and reactive powers.
tanfi3PH, tanfiL1, tanfiL2, tanfiL3	The tan (φ) of three-phase powers and phase powers.
cosfi3PH, cosfiL1, cosfiL2, cosfiL3	The cos (φ) of three-phase powers and phase powers.

Table. 4.7.9 - 614. Impedance and admittance based measurements available.

Impedances and admittances	Description
RL12, RL23, RL31 XL12, XL23, XL31, RL1, RL2, RL3 XL1, XL2, XL3 Z12, Z23, Z31 ZL1, ZL2, ZL3	The phase-to-phase and phase-to-neutral resistances, reactances and impedances.
Z12Ang, Z23Ang, Z31Ang, ZL1Ang, ZL2Ang, ZL3Ang	The phase-to-phase and phase-to-neutral impedance angles.
Rseq, Xseq, Zseq RseqAng, XseqAng, ZseqAng	The positive sequence resistance, reactance and impedance values and angles.
GL1, GL2, GL3, G0 BL1, BL2, BL3, B0 YL1, YL2, YL3, Y0	The conductances, susceptances and admittances.

YL1angle, YL2angle, YL3angle Y0angle	The admittance angles.

Table. 4.7.9 - 615. Other measurements available.

Others	Description
System f.	The tracking frequency in use at that moment.
Ref f1	The reference frequency 1.
Ref f2	The reference frequency 2.
M thermal T	The motor thermal temperature.
F thermal T	The feeder thermal temperature.
T thermal T	The transformer thermal temperature.
RTD meas 1…16	The RTD measurement channels 1…16.
Ext RTD meas 1…8	The external RTD measurement channels 1…8 (ADAM module).

Reported values

When triggered, the function holds the recorded values of up to eight channels, as set. In addition to this tripped stage, the overcurrent fault type and the voltage fault types are reported to SCADA.

© Arcteq Relays Ltd

Table. 4.7.9 - 616. Reported values.

Name	Range	Description
Tripped stage	• - • I> Trip • I>> Trip • I>>> Trip • I>>>> Trip • IDir> Trip • IDir>> Trip • IDir>>> Trip • IDir>>>> Trip • U> Trip • U>> Trip • U>>> Trip • U>>>> Trip • U< Trip • U<< Trip • U<<< Trip • U<<<< Trip • I0> TRIP • I0>> Trip • I0>>> Trip • I0>>>> Trip • I0Dir> Trip • I0Dir>> Trip • I0Dir>>> Trip • I0Dir>>>> Trip • f> Trip • f>> Trip • f>>> Trip • f>>>> Trip • f< Trip • f<< Trip • f<<< Trip • f<<<< Trip • P> Trip • P< Trip • Prev> Trip • T> Trip • I2> Trip • I2>> Trip • I2>>> Trip • I2>>>> Trip • U1/2 > Trip • U1/2 >> Trip • U1/2 >>> Trip • U1/2 >>>> Trip • U0> Trip • U0>> Trip • U0>>> Trip • U0>>>> Trip	The tripped stage.
Overcurrent fault type	• A-G • B-G • A-B • C-G • A-C • B-C • A-B-C	The overcurrent fault type.

Name	Range	Description
Voltage fault type	• A(AB) • B(BC) • A-B(AB-BC) • C(CA) • A-C(AB-CA) • B-C(BC-CA) • A-B-C • Overfrequency • Underfrequency • Overpower • Underpower • Reversepower • Thermal overload • Unbalance • Harmonic overcurrent • Residual overvoltage	The voltage fault type.
Magnitude 1…8	0.000…1800.000 A/V/p.u.	The recorded value in one of the eight channels.

Events

The fault register function (abbreviated "VREC" in event block names) generates events from the status changes in the events listed below. The user can select which event messages are stored in the main event buffer: ON, OFF, or both. The events triggered by the function are recorded with a time stamp.

Table. 4.7.9 - 617. Event messages.

Event block name	Event name
VREC1	Recorder triggered ON/OFF

4.7.10 Event logger

Event logger records status changes of protection functions, digital inputs, logical signals etc. Events are recorded with a timestamp. The time stamp resolution is 1 ms. Up to 15 000 events can be stored at once. When 15 000 events have been recorded, the event history will begin to remove the oldest events to make room for new events. You can find more information about event masks in the selected function's "Events" tab. Event masks determine what is recorded into the event history; they are configured in each function's individual settings in the *Protection*, *Control* and *Monitoring* menu. Event history is accessible with PC setting tool (*Tools → Events and Logs → Event history*) and from the device HMI if "Events" view has been configured with Carousel designer in PC setting tool.

Event overload detection

Continuous generation of a high number of nuisance events may have adverse effects on the operation and communication capabilities of the device. A high number of nuisance events may end up being generated due to mistakes in configuration and/or installation. For example, mistakes in logic configuration or RTD sensor wiring, in conjunction with suitable event mask settings may generate an excessive number of unintended events. Event overload detector looks for a condition where over 200 events are being generated inside one (1) second window (more than 1 event every 5 milliseconds on average). If such a condition is detected, further events are blocked and an IRF (Internal Relay Fault-message) is issued. The event blocking is released and the IRF can be cleared after 5 seconds if the overload condition has been corrected. Other device operations, such as protection and communication, remain available even during the event overload condition.

© Arcteq Relays Ltd

4.7.11 Disturbance recorder (DR)

The disturbance recorder is a high-capacity (64 MB permanent flash memory) and fully digital recorder integrated to the protection relay. The maximum sample rate of the recorder's analog channels is 64 samples per cycle. The recorder also supports 96 digital channels simultaneously with the twenty (20) measured analog channels. Maximum capacity of recordings is 100.

The recorder provides an effective tool to analyze the performance of the power system during network disturbance situations. The recorder's output is in general COMTRADE format and it is compatible with most recording viewers and injection devices. The files are based on the IEEE standard C37.111-1999. Captured recordings can be injected as playback with secondary testing tools that support the COMTRADE file format. Playback of files might help to analyze the fault, or can be simply used for educational purposes.

Analog and digital recording channels

Up to 20 analog recording channels and 96 digital channels are supported.

Table. 4.7.11 - 618. Analog recording channels.

Signal	Description
IL1	Phase current I_{L1}
IL2	Phase current I_{L2}
IL3	Phase current I_{L3}
I01c	Residual current I_{01} coarse*
I01f	Residual current I_{01} fine*
I02c	Residual current I_{02} coarse*
I02f	Residual current I_{02} fine*
IL1”	Phase current I_{L1} (CT card 2)
IL2”	Phase current I_{L2} (CT card 2)
IL3”	Phase current I_{L3} (CT card 2)
I01”c	Residual current I_{01} coarse* (CT card 2)
I01”f	Residual current I_{01} fine* (CT card 2)
I02”c	Residual current I_{02} coarse* (CT card 2)
I02”f	Residual current I_{02} fine* (CT card 2)
U1(2)VT1	Line-to-neutral U_{L1} or line-to-line voltage U_{L12} (VT card 1)
U2(3)VT1	Line-to-neutral U_{L2} or line-to-line voltage U_{L23} (VT card 1)
U3(1)VT1	Line-to-neutral U_{L3} or line-to-line voltage U_{L31} (VT card 1)
U0(ss)VT1	Zero sequence voltage U_0 or synchrocheck voltage U_{SS} (VT card 1)
F tracked 1	Tracked frequency of reference 1

Signal	Description
F tracked 2	Tracked frequency of reference 2
F tracked 3	Tracked frequency of reference 3
ISup	Current measurement module voltage supply supervision (CT card 1)
ISup"	Current measurement module voltage supply supervision (CT card 2)
USup	Voltage measurement module voltage supply supervision (VT card 1)
IL1"'	Phase current I_{L1} (CT card 3)
IL2"'	Phase current I_{L2} (CT card 3)
IL3"'	Phase current I_{L3} (CT card 3)
I01"'c	Residual current I_{01} coarse* (CT card 3)
I01"'f	Residual current I_{01} fine* (CT card 3)
I02"'c	Residual current I_{02} coarse* (CT card 3)
I02"'f	Residual current I_{02} fine* (CT card 3)
ISup_3	Current measurement module voltage supply supervision (CT card 3)
UL1(2)VT2	Line-to-neutral U_{L1} or line-to-line voltage U_{L12} (VT card 2)
UL2(3)VT2	Line-to-neutral U_{L2} or line-to-line voltage U_{L23} (VT card 2)
UL3(1)VT2	Line-to-neutral U_{L3} or line-to-line voltage U_{L31} (VT card 2)
U0(SS)VT2	Zero sequence voltage U_0 or synchrocheck voltage U_{SS} (VT card 2)
USup_2	Voltage measurement module voltage supply supervision (VT card 2)

*NOTE: There are two signals for each residual current channel in the disturbance recorder: coarse and fine. A coarse signal is capable of sampling in the full range of the current channel but suffers a loss of accuracy at very low currents. A fine signal is capable of sampling at very low currents and with high accuracy but cuts off at higher currents. Table below lists performance of both channels with fine and coarse gain.

Table. 4.7.11 - 619. Residual current channel performance with coarse or residual gain.

Channel	Coarse gain range	Fine gain range	Fine gain peak
I01	0...150 A	0...10 A	15 A
I02	0...75 A	0...5 A	8 A

Table. 4.7.11 - 620. Digital recording channels – Measurements.

Signal	Description	Signal	Description
Currents			

© Arcteq Relays Ltd

Signal	Description	Signal	Description
Pri.Pha.curr.ILx	Primary phase current ILx (IL1, IL2, IL3)	Pha.curr.ILx TRMS Pri	Primary phase current TRMS (IL1, IL2, IL3)
Pha.angle ILx	Phase angle ILx (IL1, IL2, IL3)	Pos./Neg./Zero seq.curr.	Positive/Negative/Zero sequence current
Pha.curr.ILx	Phase current ILx (IL1, IL2, IL3)	Sec.Pos./Neg./Zero seq.curr.	Secondary positive/negative/ zero sequence current
Sec.Pha.curr.ILx	Secondary phase current ILx (IL1, IL2, IL3)	Pri.Pos./Neg./Zero seq.curr.	Primary positive/negative/zero sequence current
Pri.Res.curr.I0x	Primary residual current I0x (I01, I02)	Pos./Neg./Zero seq.curr.angle	Positive/Negative/Zero sequence current angle
Res.curr.angle I0x	Residual current angle I0x (I01, I02)	Res.curr.I0x TRMS	Residual current TRMS I0x (I01, I02)
Res.curr.I0x	Residual current I0x (I01, I02)	Res.curr.I0x TRMS Sec	Secondary residual current TRMS I0x (I01, I02)
Sec.Res.curr.I0x	Secondary residual current I0x (I01, I02)	Res.curr.I0x TRMS Pri	Primary residual current TRMS I0x (I01, I02)
Pri.cal.I0	Primary calculated I0	Pha.Lx ampl. THD	Phase Lx amplitude THD (L1, L2, L3)
Sec.calc.I0	Secondary calculated I0	Pha.Lx pow. THD	Phase Lx power THD (L1, L2, L3)
Calculated I0	Calculated I0	Res.I0x ampl. THD	Residual I0x amplitude THD (I01, I02)
Calculated angle	Calculated I0 phase angle	Res.I0x pow. THD	Residual I0x power THD (I01, I02)
Pha.curr.ILx TRMS	Phase current TRMS ILx (IL1, IL2, IL3)	P-P curr.ILx	Phase-to-phase current ILx (IL1, IL2, IL3)
Pha.curr.ILx TRMS Sec	Secondary phase current TRMS (IL1, IL2, IL3)	P-P curr.I0x	Phase-to-phase current I0x (I01, I02)
ILx 2nd harmonic	2nd harmonic current of phase ILx (IL1, IL2, IL3)	ILx 5th harmonic	5th harmonic current of phase ILx (IL1, IL2, IL3)
Differential protection measurement values			
Signal	Description	Signal	Description
ILx Bias current	Calculated bias current of each phase	ILx Diff current	Calculated differential current of each phase
Fast current measurements (1 ms FFT)			
Signal	Description	Signal	Description
ILx Fast p.u. ff	Phase currents fundamental frequency component	ILx Fast p.u. 3h	Phase currents 3rd harmonic
ILx Fast p.u. 2h	Phase currents 2nd harmonic	ILx Fast p.u. 5h	Phase currents 5th harmonic

Signal	Description	Signal	Description
ILx Fast p.u. angle	Phase current angels	-	-
REM_ILx Fast p.u. ff	Phase currents fundamental frequency component of remote device (line differential)	REM_ILx Fast p.u. 3h of remote device (line differential)	Phase currents 3rd harmonic
REM_ILx Fast p.u. 2h	Phase currents 2nd harmonic of remote device (line differential)	REM_ILx Fast p.u. 5h of remote device (line differential)	Phase currents 5th harmonic of remote device (line differential)
REM_ILx Fast p.u. angle	Phase current angels of remote device (line differential)	-	-
Voltages			
Signal	Description	Signal	Description
Ux Volt p.u.	Ux voltage in per-unit values (U1, U2, U3, U4)	System volt ULxx mag	Magnitude of the system voltage ULxx (UL12, UL23, UL31)
Ux Volt pri	Primary Ux voltage (U1, U2, U3, U4)	System volt ULxx mag(kV)	Magnitude of the system voltage ULxx in kilovolts (UL12, UL23, UL31)
Ux Volt sec	Secondary Ux voltage (U1, U2, U3, U4)	System volt ULxx ang	Angle of the system voltage ULxx (UL12, UL23, UL31)
Ux Volt TRMS p.u.	Ux voltage TRMS in per-unit values (U1, U2, U3, U4)	System volt ULx mag	Magnitude of the system voltage ULx (UL12, UL23, UL31)
Ux Volt TRMS pri	Primary Ux voltage TRMS (U1, U2, U3, U4)	System volt ULx mag(kV)	Magnitude of the system voltage ULx in kilovolts (UL1, UL2, UL3)
Ux Volt TRMS sec	Secondary Ux voltage TRMS (U1, U2, U3, U4)	System volt ULx ang	Angle of the system voltage ULx (UL1, UL2, UL3)
Pos/Neg./Zero seq.Volt.p.u.	Positive/Negative/Zero sequence voltage in per-unit values	System volt U0 mag	Magnitude of the system voltage U0
Pos./Neg./Zero seq.Volt.pri	Primary positive/negative/ zero sequence voltage	System volt U0 mag(kV)	Magnitude of the system voltage U0 in kilovolts
Pos./Neg./Zero seq.Volt.sec	Secondary positive/negative/ zero sequence voltage	System volt U0 mag(%)	Magnitude of the system voltage U0 in percentages
Ux Angle	Ux angle (U1, U2, U3, U4)	System volt U0 ang	Angle of the system voltage U0
Pos./Neg./Zero Seq volt.Angle	Positive/Negative/Zero sequence voltage angle	Sample shift	-
Angle difference correction	-	Measured voltage delta ULx	-

© Arcteq Relays Ltd

Signal	Description	Signal	Description
Resistive and reactive currents			
ILx Resistive Current p.u.	ILx resistive current in per-unit values (IL1, IL2, IL3)	Pos.seq. Resistive Current Pri.	Primary positive sequence resistive current
ILx Reactive Current p.u.	ILx reactive current in per-unit values (IL1, IL2, IL3)	Pos.seq. Reactive Current Pri.	Primary positive sequence reactive current
Pos.Seq. Resistive Current p.u.	Positive sequence resistive current in per-unit values	I0x Residual Resistive Current Pri.	Primary residual resistive current I0x (I01, I02)
Pos.Seq. Reactive Current p.u.	Positive sequence reactive current in per-unit values	I0x Residual Reactive Current Pri.	Primary residual reactive current I0x (I01, I02)
I0x Residual Resistive Current p.u.	I0x residual resistive current in per-unit values (I01, I02)	ILx Resistive Current Sec.	Secondary resistive current ILx (IL1, IL2, IL3)
I0x Residual Reactive Current p.u.	I0x residual ractive current in per-unit values (I01, I02)	ILx Reactive Current Sec.	Secondary reactive current ILx (IL1, IL2, IL3)
ILx Resistive Current Pri.	Primary resistive current ILx (IL1, IL2, IL3)	I0x Residual Resistive Current Sec.	Secondary residual resistive current I0x (I01, I02)
ILx Reactive Current Pri.	Primary reactive current ILx (IL1, IL2, IL3)	I0x Residual Reactive Current Sec.	Secondary residual reactive current I0x (I01, I02)
Power, GYB, frequency			
Lx PF	Lx power factor (L1, L2, L3)	Curve x Input	Input of Curve x (1, 2, 3, 4)
POW1 3PH Apparent power (S)	Three-phase apparent power	Curve x Output	Output of Curve x (1, 2, 3, 4)
POW1 3PH Apparent power (S MVA)	Three-phase apparent power in megavolt-amperes	Enablefbasedfunctions(VT1)	Enable frequency-based functions
POW1 3PH Active power (P)	Three-phase active power	Track.sys.f.	Tracked system frequency
POW1 3PH Active power (P MW)	Three-phase active power in megawatts	Sampl.f. used	Used sample frequency
POW1 3PH Reactive power (Q)	Three-phase reactive power	Tr f CH x	Tracked frequency (channels A, B, C)
POW1 3PH Reactive power (Q MVar)	Three-phase reactive power in megavars	Alg f Fast	Fast frequency algorithm

Signal	Description	Signal	Description
POW1 3PH Tan(phi)	Three-phase tangent phi	Alg f avg	Average frequency algorithm
POW1 3PH Cos(phi)	Three-phase cosine phi	Frequency based protections blocked	When true ("1"), all frequency-based protections are blocked.
3PH PF	Three-phase power factor	f atm. Protections (when not measurable returns to nominal)	Frequency at the moment. If the system nominal is set to 50 Hz, this will show "50 Hz".
Primary resistance L1/ L2/L3/L12/L23/ L31 R	Primary resistance of phases	Primary impedance Z1/Z2/ Z3/Z12/Z23/Z31	Primary impedance of each loop
Secondary resistance L1/ L2/L3/L12/L23/ L31 R	Secondary resistance of phases	Secondary impedance Z1/ Z2/Z3/Z12/Z23/Z31	Secondary impedance of each loop
Primary pos.seq. resistance Z1P R	Primary ositive sequence resistance	Impedance angle Z1/Z2/Z3/ Z12/Z23/Z31	Impedance angle of each loop
Primary pos.seq. reactance Z1P X	Primary positive sequence reactance	Primary pos.seq. impedance Z1P	Primary positive sequence impedance
Secondary pos.seq. resistance Z1P R	Secondary positive sequence resistance	Secondary pos.seq. impedance Z1P	Secondary positive sequence impedance
Secondary pos.seq. reactance Z1P X	Secondary positive sequence reactance	Angle Z1P	Positive sequence impedance angle
Max primary LL impedance	Maximum line-to-line impedance loop	Max primary LE impedance	Maximum line-to-earth impedance loop
Neutral conductance G (Pri)	Primary neutral conductance	f atm. Display (when not measurable is 0 Hz)	Frequency at the moment. If the frequency is not measurable, this will show "0 Hz".
Neutral susceptance B (Pri)	Primary neutral susceptance	f meas qlty	Quality of tracked frequency
Neutral admittance Y (Pri)	Primary neutral admittance	f meas from	Indicates which of the three voltage or current channel frequencies is used by the device.
Neutral admittance Y (Ang)	Neutral admittace angle	SS1.meas.frqs	Synchrocheck – the measured frequency from voltage channel 1

© Arcteq Relays Ltd

Signal	Description	Signal	Description
I01 Resistive component (Pri)	Primary resistive component I01	SS2.meas.frqs	Synchrocheck – the measured frequency from voltage channel 2
I01 Capacitive component (Pri)	Primary capacitive component I01	Enable f based functions	Status of this signal is active when frequency-based protection functions are enabled.
Curve 1…10 Input	Scaled curve input	Curve 1…10 Output	Scaled curve output

Table. 4.7.11 - 621. Digital recording channels – Binary signals.

Signal	Description	Signal	Description
DIx	Digital input 1...11	Timer x Output	Output of Timer 1...10
Open/close control buttons	Active if buttons I or 0 in the unit's front panel are pressed.	Internal Relay Fault active	If the unit has an internal fault, this signal is active.
Status PushButton x On	Status of Push Button 1...12 is ON	(Protection, control and monitoring event signals)	(see the individual function description for the specific outputs)
Status PushButton x Off	Status of Push Button 1...12 is OFF	Always True/False	"Always false" is always "0". Always true is always "1".
Forced SG in use	Stage forcing in use	OUTx	Output contact statuses
SGx Active	Setting group 1...8 active	GOOSE INx	GOOSE input 1...64
Double Ethernet LinkA down	Double ethernet communication card link A connection is down.	GOOSE INx quality	Quality of GOOSE input 1...64
Double Ethernet LinkB down	Double ethernet communication card link B connection is down.	Logical Input x	Logical input 1...32
MBIO ModA Ch x Invalid	Channel 1...8 of MBIO Mod A is invalid	Logical Output x	Logical output 1...64
MBIO ModB Ch x Invalid	Channel 1...8 of MBIO Mod B is invalid	NTP sync alarm	If NTP time synchronization is lost, this signal will be active.
MBIO ModB Ch x Invalid	Channel 1...8 of MBIO Mod C is invalid	Ph.Rotating Logic control 0=A-B-C, 1=A-C-B	Phase rotating order at the moment. If true ("1") the phase order is reversed.

Recording settings and triggering

Disturbance recorder can be triggered manually or automatically by using the dedicated triggers. Every signal listed in "Digital recording channels" can be selected to trigger the recorder.

The number of analog and digital channels together with the sample rate and the time setting affect the recording size. See calculation examples below in the section titled "Estimating the maximum length of total recording time". The recording size affects how many recordings can be stored at a time, but the number can't exceed 100 recordings.

Table. 4.7.11 - 622. Recorder control settings.

Name	Range	Description
Recorder enabled	• Enabled • Disabled	Enables and disables the disturbance recorder function.
Recorder status	• Recorder ready • Recording triggered • Recording and storing • Storing recording • Recorder full • Wrong config	Indicates the status of recorder. "Wrong config" is activated if: • "Pre-triggering time" is longer than "Max length of recording" setting • "Max amount of recordings" is "1" and "Recording mode" is "FIFO". • "1ms" digital channel sample rate is selected when analog channel sample rate is 8 or 16 s/c.
Clear record+	0…2^{32}-1	Clears selected recording. If "1" is inserted, first recording will be cleared from memory. If "10" is inserted, tenth (10th) recording will be cleared from memory.
Manual trigger	• - • Trig	Triggers disturbance recording manually. This parameter will return back to "-" automatically.
Clear all records	• - • Clear	Clears all disturbance recordings.
Clear newest record	• - • Clear	Clears the newest stored disturbance recording.
Clear oldest record	• - • Clear	Clears the oldest stored disturbance recording.
Max. number of recordings	0…100	Displays the maximum number of recordings that can be stored in the device's memory with settings currently in use. The maximum number of recordings can go up to 100.
Max. length of a recording	0.000...1800.000s	Displays the maximum length of a single recording.
Max. location of the pre-trigger	0.000...1800.000s	Displays the highest pre-triggering time that can be set with the settings currently in use.
Recordings in memory	0…100	Displays how many recordings are stored in the memory.

© Arcteq Relays Ltd

Table. 4.7.11 - 623. Recorder trigger setting.

Name	Description
Recorder trigger	Selects the trigger input(s). Clicking the "Edit" button brings up a pop-up window, and checking the boxes enable the selected triggers.

Table. 4.7.11 - 624. Recorder settings.

Name	Range	Default	Description
Recording length	0.100...1800.000s	1s	Sets the length of a recording.
Recording mode	• FIFO • Keep olds	FIFO	Selects what happens when the memory is full. "FIFO" (= first in, first out) replaces the oldest stored recording with the latest one. "Keep olds" does not accept new recordings.
Analog channel samples	• 64s/c • 32s/c • 16s/c • 8s/c	64s/c	Selects the sample rate of the disturbance recorder in samples per cycle. The samples are saved from the measured wave according to this setting.
Digital channel samples	• 5 ms • 1 ms	5 ms	The fixed sample rate of the recorded digital channels. Recorded digital channels can be chosen with "Recorder digital channels" below. NOTE: 1 ms sample rate can't be used when analog channel sample rate is 8 or 16 s/c.
Pretriggering time	0.2...30.0s	0.2s	Sets the recording length before the trigger.
Analog recording CH1...CH20	0…8 freely selectable channels	-	Selects the analog channel for recording. Please see the list of all available analog channels in the section titled "Analog and digital recording channels".
Automatically get recordings	• Disabled • Enabled	Disabled	Enables and disables the automatic transfer of recordings. The recordings are taken from the device's protection CPU and transferred to the device's FTP directory in the communication CPU; the FTP client then automatically loads the recordings from the device and transfers them further to the SCADA system. Please note that when this setting is enabled, all new disturbance recordings will be pushed to the FTP server of the device. Up to six (6) recordings can be stored in the FTP at once. Once those six recordings have been retrieved and removed, more recordings will then be pushed to the FTP. When a recording has been sent to the FTP server of the device, it is no longer accessible through setting tools *Disturbance recorder → Get DR files* command.
Recorder digital channels	0…96 freely selectable channels	-	Selects the digital channel for recording. Please see the list of all available digital channels in the section titled "Analog and digital recording channels".



NOTICE!
The disturbance recorder is not ready unless the "Max. length of a recording" parameter is showing some value other than zero. At least one trigger input has to be selected in the "Recorder Trigger" setting to fulfill this term.

NOTICE!
When writing new disturbance recorder settings to the device, any existing recordings in the device memory will be deleted.

Estimating the maximum length of total recording time

Once the disturbance recorder's settings have been made and loaded to the device, the device automatically calculates and displays the total length of recordings. However, if the user wishes to confirm this calculation, they can do so with the following formula. Please note that the formula assumes there are no other files in the FTP that share the 64 MB space.

$$\frac{\text{Total sample reserve}}{(f_n * (Ch_{an} + 1) * SR) + (200\ Hz * Ch_{dig})}$$

Where:

- total sample reserve = the number of samples available in the FTP when no other files are saved; calculated by dividing the total number of available bytes by 4 bytes (=the size of one sample); e.g. 64 306 588 bytes/4 bytes = 16 076 647 samples.
- f_n = the nominal frequency (Hz).
- Ch_{an} = the number of analog channels recorded; "+ 1" stands for the time stamp for each recorded sample.
- SR = the selected sample rate (s/c).
- 200 Hz = the rate at which digital channels are always recorded, i.e. 5 ms.
- Ch_{dig} = the number of digital channels recorded.

For example, let us say the nominal frequency is 50 Hz, the selected sample rate is 64 s/c, nine (9) analog channels and two (2) digital channels record. The calculation is as follows:

$$\frac{16\ 076\ 647\ \text{samples}}{(50\ \text{Hz} * (9 + 1) * 64) + (200\ \text{Hz} * 2)} \approx 496\ \text{s}$$

Therefore, the maximum recording length in our example is approximately 496 seconds.

Application example

This chapter presents an application example of how to set the disturbance recorder and analyze its output. The recorder is configured by using the setting tool software or device HMI, and the results are analyzed with the AQviewer software (is automatically downloaded and installed with AQtivate). Registered users can download the latest tools from the Arcteq website (arcteq.fi./downloads/).

In this example, we want the recordings to be made according to the following specifications:

- the recording length is 6.0 s
- the sample rate is 64 s/c (therefore, with a 50 Hz system frequency a sample is taken every 312.5 µs)
- the analog channels 1...8 are used
- digital channels are tracked every 5 ms
- the first activation of the overcurrent stage trip (I> TRIP) triggers the recorder
- the pre-triggering time is 5 (ie. how long is recorded before the I> TRIP signal) and the post-triggering time is 1 s

The image below shows how these settings are placed in the setting tool.

© Arcteq Relays Ltd

Figure. 4.7.11 - 287. Disturbance recorder settings.

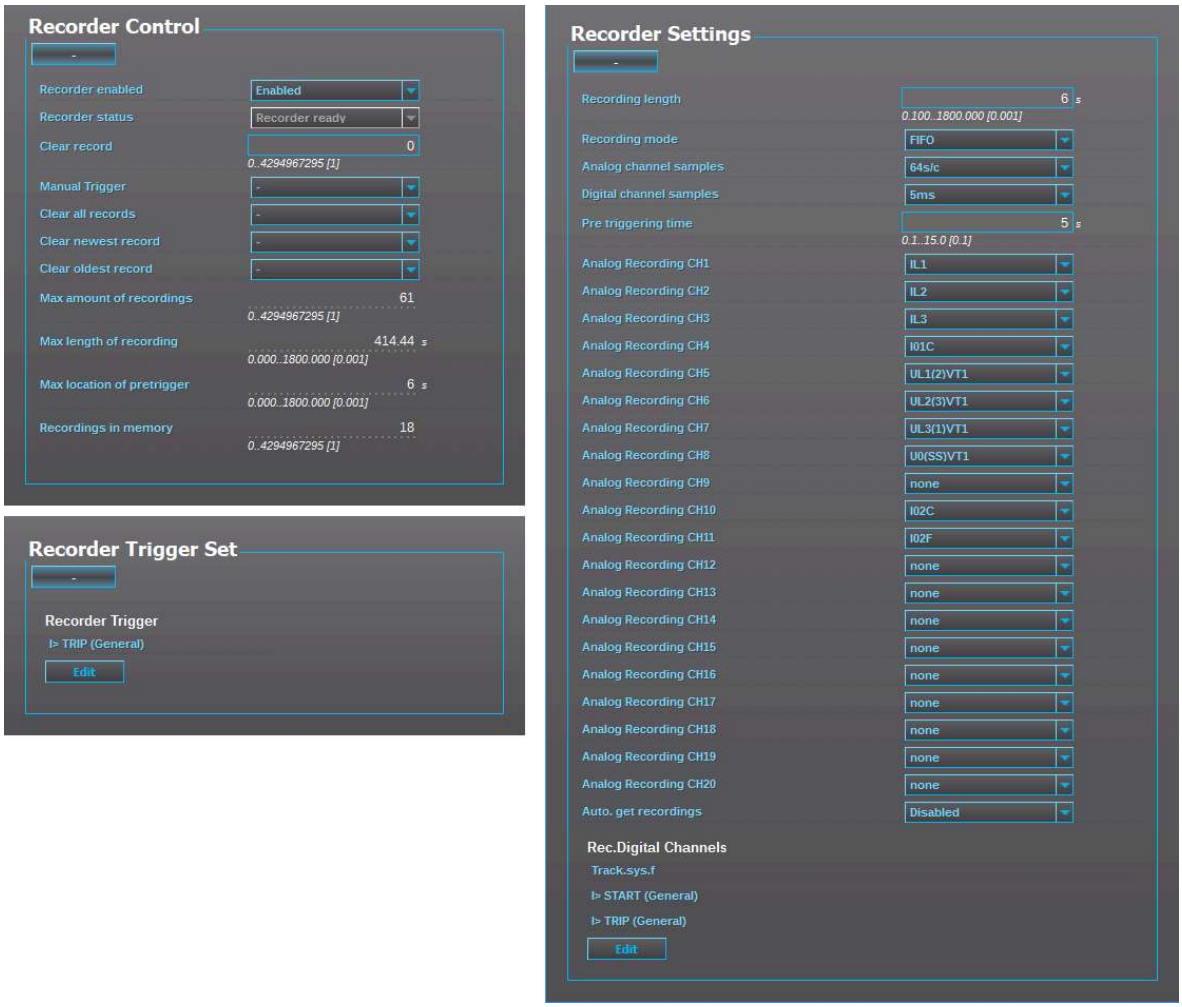

Figure. 4.7.11 - 288. Effects of recording length and pre-triggering time signals. This example is based on the settings shown above.

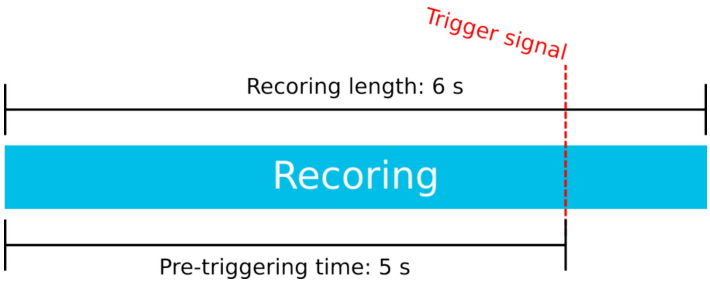

When there is at least one recording in the device's memory, that recording can be analyzed by using the AQviewer software (see the image below). However, the recording must first be made accessible to AQViewer. The user can read it from the device's memory (*Disturbance recorder → Get DR-files*). Alternatively, the user can load the recordings individually (*Disturbance recorder → DR List*) from a folder in the PC's hard disk drive; the exact location of the folder is described in *Tools → Settings → DR path*.

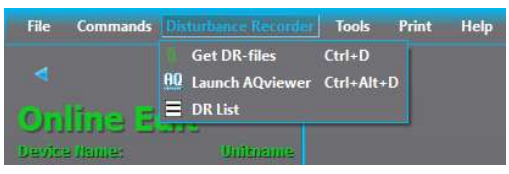

The user can also launch the AQviewer software from the *Disturbance recorder* menu. AQviewer software instructions can be found in AQtivate Instruction manual (https://www.arcteq.com/documents-and-software/).

Events

The disturbance recorder function (abbreviated "DR" in event block names) generates events and registers from the status changes in the events listed below. Events cannot be masked off. The events triggered by the function are recorded with a time stamp.

Table. 4.7.11 - 625. Event messages.

Event block name	Event names
DR1	Recorder triggered ON/OFF
DR1	Recorder memory cleared
DR1	Oldest record cleared
DR1	Recorder memory full ON/OFF
DR1	Recording ON/OFF
DR1	Storing recording ON/OFF
DR1	Newest record cleared

4.7.12 User access control

As a factory default, no user level is locked with a password in a device. In order to activate the different user levels, push the Lock button on the device's front panel and set the desired passwords for the user levels.

© Arcteq Relays Ltd
IM00099

Figure. 4.7.12 - 289. User access control view.

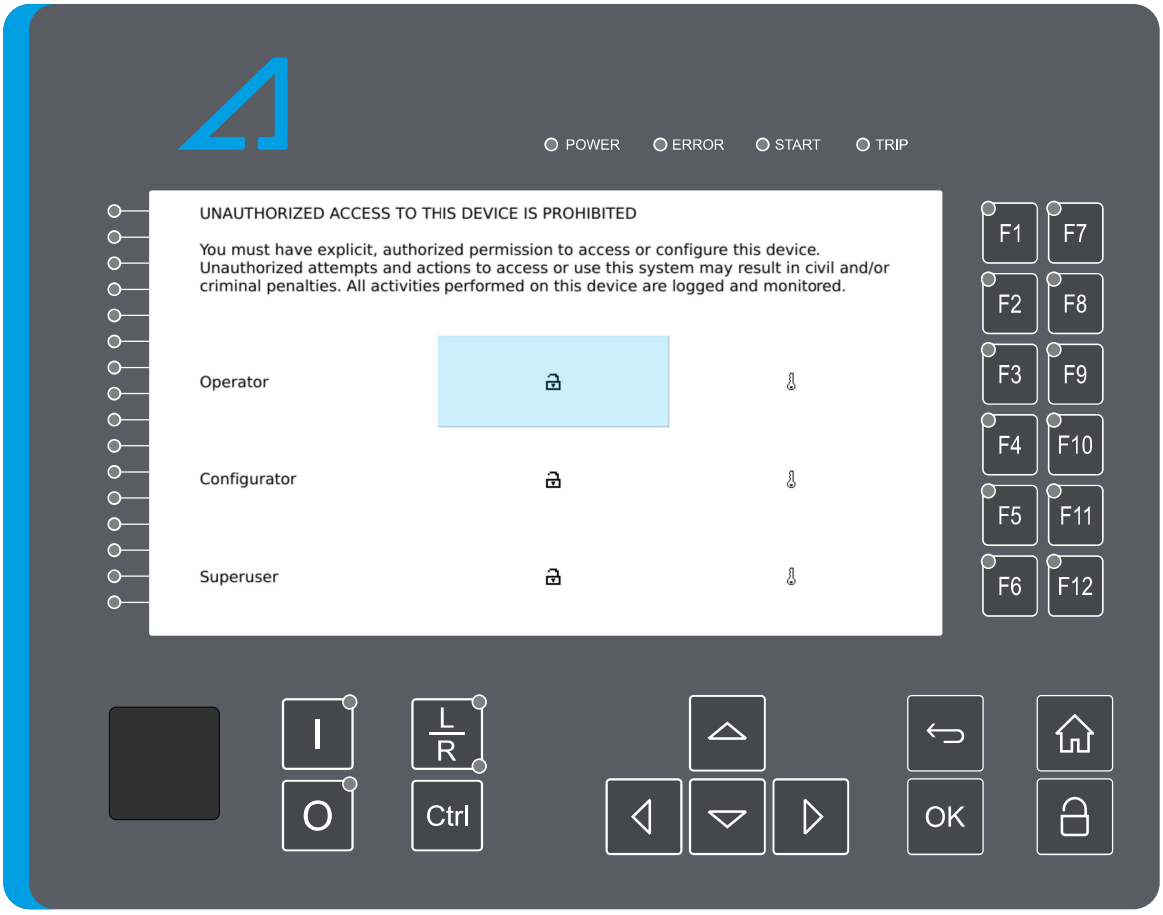

NOTICE!
Passwords can only be set locally in an HMI.

You can set a new password for a user level by selecting the key icon next to the user level's name. After this you can lock the user level by pressing the Return key while the lock is selected. If you need to change the password, you can select the key icon again and give a new password. To remove the password, set the password to "0" (zero). Please note that in order to do this the user level whose password is being changed must be unlocked.

As a general rule the access levels are divided as follows:

- User: Can view any menus and settings but cannot change any settings, nor operate breakers or other equipment.
- Operator: Can view any menus and settings but cannot change any settings BUT can operate breakers and other equipment.
- Configurator: Can change most settings such as basic protection pick-up levels or time delays, breaker control functions, signal descriptions etc. and can operate breakers and other equipment.
- Super user: Can change any setting and can operate breakers and other equipment.

Advanced user access control settings

More detailed settings for user access can be found from *Monitoring → User Access Control* menu.

Table. 4.7.12 - 626. UAC settings.

Name	Range	Default	Description
Enable user group - Operator	• Enabled • Disabled	Enabled	Enables or disables "Operator" user group.
Enable user group - Configurator	• Enabled • Disabled	Enabled	Enables or disables "Configurator" user group.
Minimum password length	0…128	1	Sets the minimum character length for passwords.
Number of fail attempts before lock	0…1000	3	Sets the number of failed attempts allowed before locking the user level.
Lock period after max fail attempts	0…86400000 s	0 s	Wait time after locking a user level.
HMI session period before logout	5…86400 s	900 s	Time delay for logging out in the HMI. Timer will start the countdown when there are no front panel button presses.
Setting tool session period before logout	5…86400 s	900 s	Time delay for logging out in the setting tool. Timer will start the countdown when there are no key presses or mouse movement.

Table. 4.7.12 - 627. UAC management.

Name	Range	Default	Description
Enable UAC management	• Enabled • Disabled	Disabled	If UAC has been enabled, the function will set default passwords for the user levels, if no passwords have been set. The function will also monitor if the passwords have been expired.
Enable default passwords	• Enabled • Disabled	Disabled	If enabled, user levels will use the default passwords, if no passwords have been set. The default passwords are: • Operator: Oper17 • Configurator: Conf12 • Super user: Supr98
Password change interval - Operator	0…1000 day(s)	0 day(s)	Required interval for changing passwords. If the password hasn't been changed on time, "Password expired" parameter will change to "True", diagnostic alarm will be activated and an entry to the audit log will be added.
Password change interval - Configurator	0…1000 day(s)	0 day(s)	
Password change interval - Superuser	0…1000 day(s)	0 day(s)	
Password expired - Operator	• False • True	-	If the password hasn't been changed before the "password change interval" has expired, this parameter will change to "True"

© Arcteq Relays Ltd

Name	Range	Default	Description
Password expired - Configurator	• False • True	-	
Password expired - Superuser	• False • True	-	
Default password unchanged - Operator	• False • True	-	Indicates if the user level is using the default password or a user configured password.
Default password unchanged - Configurator	• False • True	-	
Default password unchanged - Superuser	• False • True	-	
Password last changed - Operator	DD/MM/YYYY HH:mm:ss	-	Timestamp of the last time the password has been changed for the user level.
Password last changed - Configurator	DD/MM/YYYY HH:mm:ss	-	
Password last changed - Superuser	DD/MM/YYYY HH:mm:ss	-	

5 Communication

5.1 Connections menu

"Connections" menu is found under "Communication" menu. It contains all basic settings of the default back panel ethernet port and RS-485 serial port as well as settings of communication option cards.

Table. 5.1 - 628. Ethernet settings.

Name	Range	Description
IP address	0.0.0.0...255.255.255.255	Set IP address of the ethernet port in the back of the device.
Netmask	0.0.0.0...255.255.255.255	Set netmask of the ethernet port in the back of the device.
Gateway	0.0.0.0...255.255.255.255	Set gateway of the ethernet port in the back of the device.
MAC-Address	00-00-00-00-00-00...FF-FF-FF-FF-FF-FF	Indication of MAC address of the device.
Storm Protection	• Disable • Enable	When enabled, the Storm protection functionality of the internal switch in the device is enabled. This functionality aims to protect the device from excess ethernet traffic caused by storm situation. When enabled, the packet rate allowed to pass through on the ingress port towards the device, is limited to 150 packets per second. Multicast packets are also included in the packet limit.
Double Ethernet card mode	• Switch • HSR • PRP	If the device has a double ethernet option card it is possible to choose its mode.
COM A and Ethernet option card connection	• Block all • Allow both directions • Allow COM A to option card • Allow option card to COM A	If the device has ethernet option card it is possible to determine the allowed direction of data.
Double Ethernet link events	• Disable • Enable	Disables or enables "Double Ethernet Link A down" and "Double Ethernet Link B down" logic signals and events.
Double Ethernet PRP ports	• AB • BA	LanA and LanB port assigment for communication cards that support PRP.

Table. 5.1 - 629. Ethernet security settings.

Name	Description
Enable back Ethernet port	Enable/Disable back panel Ethernet port communication.
Enable front Ethernet port	Enable/Disable front panel Ethernet port communication.

© Arcteq Relays Ltd

Name	Description
Enable SSH from front Ethernet port	Enable/Disable front panel Ethernet port SSH.
Enable FTP	Enable/Disable FTP server.
Enable discovery messages	Enable/Disable discovery messages. Discovery messages enable *Tools → Device list* menu in AQtivate setting tool to find all of the devices in the network.
Enable script running	Enable/Disable running scripts with *Tools → Run script* in AQtivate setting tool.

Virtual Ethernet enables the device to be connected to multiple different networks simultaneously via one physical Ethernet connection. Virtual Ethernet has its own separate IP address and network configurations. All Ethernet-based protocol servers listen for client connections on the IP addresses of both the physical Ethernet and the Virtual Ethernet.

Table. 5.1 - 630. Virtual Ethernet settings.

Name	Description
Enable virtual adapter (No / Yes)	Enable virtual adapter. Off by default.
IP address	Set IP address of the virtual adapter.
Netmask	Set netmask of the virtual adapter.
Gateway	Set gateway of the virtual adapter.

Table. 5.1 - 631. Ethernet Option Card settings.

Name	Range	Default	Description
Ethernet card type	• None • SFP • RJ45	Ready only	Indicates the ethernet card type.
Card mode	• COM A IP • Single virtual IP • Dual virtual IP	COM A IP	
Rate limit	• No limit • 12.5Mb/1Mb • 30Mb/2Mb	No limit	
Clock synchronization mode	• IRIG-B • PTP	IRIG-B	Clock synchronization mode selection. See "Time synchronization" chapter for more information.
Card status	• Port1 link ok • Port2 link ok	Read only	
Card status (all)	0…4294967295	Read only	
Port 1 dropped packet count	0…4294967295	Read only	

Name	Range	Default	Description
Port 2 dropped packet count	0…4294967295	Read only	
Enable port 1	• No • Yes	No	
Port 1 SFP module status	• Error • OK	Read only	
Port1 virtual Ethernet adapter IP address	0.0.0.0...255.255.255.255	10.15.1.0	
Port1 virtual Ethernet adapter netmask	0.0.0.0...255.255.255.255	255.255.255.0	
Port1 virtual Ethernet adapter gateway	0.0.0.0...255.255.255.255	10.15.1.254	
Port1 virtual Ethernet adapter MAC address	00-00-00-00-00-00...FF-FF-FF-FF-FF-FF	Read only	
Port 1 allowed protocols	• IEC61850 • GOOSE • ModbusTCP • IEC104 • DNP TCP • FTP • OPC UA • NTP • LPM communication • Settingtool communication • PTP	None	
Port 1 link status events	• Enable • Disable	Enable	
Port 2 SFP module status	• Error • OK	Read only	
Port 2 link status events	• Enable • Disable	Enable	

The device is equipped with an RS-485 serial port. In the software it is identified as "Serial COM1" port.

Table. 5.1 - 632. Serial COM1 settings.

Name	Range	Description
Bitrate	• 9600bps • 19200bps • 38400bps	Bitrate used by RS-485 port.

© Arcteq Relays Ltd

Name	Range	Description
Databits	7...8	Databits used by RS-485 port.
Parity	• None • Even • Odd	Paritybits used by RS-485 port.
Stopbits	1...2	Stopbits used by RS-485 port.
Protocol	• None • ModbutRTU • ModbusIO • IEC103 • SPA • DNP3 • IEC101	Communication protocol used by RS-485 port.

The device supports communication option card type that has serial fiber ports (Serial COM2) an RS-232 port (Serial COM3).

Table. 5.1 - 633. Serial COM2 settings.

Name	Range	Description
Bitrate	• 9600bps • 19200bps • 38400bps	Bitrate used by serial fiber channels.
Databits	7...8	Databits used by serial fiber channels.
Parity	• None • Even • Odd	Paritybits used by serial fiber channels.
Stopbits	1...2	Stopbits used by serial fiber channels.
Protocol	• None • ModbutRTU • ModbusIO • IEC103 • SPA • DNP3 • IEC101	Communication protocol used by serial fiber channels.
Echo	• Off • On	Enable or disable echo.
Idle Light	• Off • On	Idle light behaviour.

Table. 5.1 - 634. Serial COM3 settings.

Name	Range	Description
Bitrate	• 9600bps • 19200bps • 38400bps	Bitrate used by RS-232 port.
Databits	7...8	Databits used by RS-232 port.
Parity	• None • Even • Odd	Paritybits used by RS-232 port.
Stopbits	1...2	Stopbits used by RS-232 port.
Protocol	• None • ModbutRTU • ModbusIO • IEC103 • SPA • DNP3 • IEC101	Communication protocol used by RS-232 port.

5.2 Time synchronization

Time synchronization source can be selected with "Time synchronization" parameter at *Communication → Synchronization → General*.

Table. 5.2 - 635. General time synchronization source settings.

Name	Range	Description
Time synchronization source	• Internal • External NTP • External serial • IRIG-B • PTP	Selection of time synchronization source.

5.2.1 Internal

If no external time synchronization source is available the mode should be set to "internal". This means that the device clock runs completely on its own. Time can be set to the device with AQtivate setting tool with *Commands → Sync Time* command or in the clock view from the HMI. When using *Sync time* command AQtivate sets the time to device the connected computer is currently using. Please note that the clock doesn't run when the device is powered off.

5.2.2 NTP

When enabled, the NTP (Network Time Protocol) service can use external time sources to synchronize the device's system time. The NTP client service uses an Ethernet connection to connect to the NTP time server. NTP can be enabled by setting the primary time server and the secondary time server parameters to the address of the system's NTP time source(s).

© Arcteq Relays Ltd

Table. 5.2.2 - 636. Server settings.

Name	Range	Description
Primary time server address	0.0.0.0...255.255.255.255	Defines the address of the primary NTP server. Setting this parameter at "0.0.0.0" means that the server is not in use.
Secondary time server address	0.0.0.0...255.255.255.255	Defines the address of the secondary (or backup) NTP server. Setting this parameter at "0.0.0.0" means that the server is not in use.
NTP version	3...4	Defines the NTP version used.

Table. 5.2.2 - 637. Status.

Name	Range	Description
NTP quality for events	• No sync • Synchronized	Displays the status of the NTP time synchronization at the moment. NOTE: This indication is not valid if another time synchronization method is used (external serial).
NTP-processed message count	0...4294967295	Displays the number of messages processed by the NTP protocol.

Additionally, the time zone of the device can be set by connecting to the device and the selecting the time zone at *Commands → Set time zone* in AQtivate setting tool.

5.2.3 PTP

The device supports IEEE 1588v2 precision time protocol synchronization in accordance with the PTP profiles defined in IEEE C37.238-2011/2017 and IEC 61850-9-3 (2016). The device can be configured to operate as a master, as a slave or in an automatic mode where the role is selected dynamically.

In typical operation the device functions as an ordinary clock and is configured either in slave mode or in auto mode. In both cases the device synchronizes to an external Grandmaster and does not normally act as a time source when a higher-priority clock is available. This is common in networks where a GPS-synchronized Grandmaster is present.

When operating in auto mode the device participates in the Best Master Clock Algorithm (BMCA) continuously comparing its clock quality with other PTP devices in the network. Based on this evaluation it automatically assumes the appropriate role—either master or slave.

When the device is explicitly configured in master mode it behaves as a pre-master if a GPS-synchronized Grandmaster is present. In this condition it advertises its clock properties but does not take over the Grandmaster role unless the higher-priority clock becomes unavailable.

To ensure redundancy at least one device often a protection relay is typically assigned a higher priority or explicitly set to master to act as a backup Grandmaster. If the GPS-synchronized master becomes unavailable this device takes over seamlessly and continuous time distribution.

If the device becomes a Grandmaster either because it is explicitly configured as master or because BMCA selects it in auto mode it provides the reference time for other devices. In this state the device is not synchronized to GPS and the time source relies solely on its internal oscillator. This ensures continued synchronization within the network even when the GPS-based master is lost although the absolute accuracy depends on the internal clock stability.

Settings

Select PTP as the time synchronization source from *Communication* → *Synchronization* → *General* menu.

The following settings are available in *Communication* → *Synchronization* → *PTP* menu.

Table. 5.2.3 - 638. PTP time synchronization settings.

Name	Range	Description
Power profile	• None • IEEE C37-238-2011 • IEC61850-9-3 • IEEE C37-238-2017	Defines used power profile.
Role	• Auto (Default) • Master • Slave	In Auto mode, the device can take both the role of a clock source and clock consumer. In Master mode the device is forced to concider itself to be a clock source. In Slave mode the device is forced to be a clock consumer.
Mechanism	• P2P (Default) • E2E	Delay measurement mechanism used. Peer-to-peer can utilize the PTP enabled switches as transparent ro boundary clocks while End-to-end must be used if non-PTP enabled switches are found in the network.
Domain number	0...255	PTP devices can be set to belong to a grouping called domain. Devices in same domain is primearly being synchronized together.
Log announce interval		Mean time interval between successive announce messages.
Log delayReq interval		The minimum permitted mean time interval between successive Delay_Req messages
Log sync interval		Mean time interval between successive sync messages
Sync receipt timeout		Number of sync intervals that must pass without receipt of an sync message before the occurrence of the event SYNC_RECEIPT_TIMEOUT_EXPIRES
Announce receipt timeout		Number of announce intervals that must pass without receipt of an announce message before the occurrence of the event ANNOUNCE_RECEIPT_TIMEOUT_EXPIRES
Clock class		The traceability, synchronization state and expected performance of the time or frequency distributed by the Grandmaster PTP Instance
Clock accuracy		The expected accuracy of a PTP Instance when it is the Grandmaster PTP Instance, or in the event it becomes the Grandmaster PTP Instance
Priority 1		Priority setting used in the execution of the best master clock algorithm. Lower values take precedence
Priority 2		Priority setting used in the execution of the best master clock algorithm. Lower values take precedence

© Arcteq Relays Ltd

Name	Range	Description
VLAN enable	• Disabled • Enabled	Enable VLAN header for PTP communication
VLAN priority	0...7	Priority setting for VLAN
VLAN ID	0...4095	VLAN identification setting
Reconfigure PTP	• - • Reconfigure	Parameter to trig reconfiguration of the PTP application

Status indications

The following status indications are available in *Communication → Synchronization → PTP* menu.

Table. 5.2.3 - 639. PTP status indications

Name	Description
State	State of the PTP application (Master, Slave, Listening).
Best master	Identification of best master in network. Id consist of MAC address plus id number.
Last receive	Time when last synchronization frame was received.
Message sent	Diagnostic message counter.
Message receive	Diagnostic message counter.
PTP timesource	Diagnostic number describing the current time source.

5.3 Communication protocols

The following chapters will describe all available communication protocols. The device includes an RJ-45 ethernet port and an RS-485 serial port, which are able to use communication protocols. See other options for communication ports under "Construction and installation".

5.3.1 IEC 61850

The user can enable the IEC 61850 protocol in device models that support this protocol at *Communication → Protocols → IEC61850*. The device supports both Edition 1 and 2 of IEC 61850. The following services are supported by the device:

- Up to eight (8) data sets
- Report Control Blocks (both buffered and unbuffered reporting)
- Control ('Direct operate with normal security', 'Select before operate with normal security, 'Direct with enhanced security' and 'Select before operate with enhanced sequrity' control sequences)
- Disturbance recording file transfer
- GOOSE
- Time synchronization

The device's current IEC 61850 setup can be viewed and edited with the IEC61850 tool (*Tools → Communication → IEC 61850*).

Settings

The general setting parameters for the IEC 61850 protocol are visible both in AQtivate and in the local HMI. The settings are described in the table below.

Table. 5.3.1 - 640. General settings.

Name	Range	Step	Default	Description
Enable IEC 61850	• Disabled • Enabled	-	Disabled	Enables and disables the IEC 61850 communication protocol.
Reconfigure IEC 61850	• - • Reconfigure	-	-	Reconfigures IEC 61850 settings.
IEC61850 edition	• Ed1 • Ed2	-	-	Displays the IEC61850 edition used by the device. Edition can be chosen by loading a new CID file at *Tools → Communication → IEC 61850* with *Open* button.
Control Authority switch	• Remote Control • Station Level Control	-	Remote Control	The device can be set to allow object control via IEC 61850 only from clients that are of category Station level control. This would mean that other Remote control clients would not be allowed to control. In Remote control mode all IEC 61850 clients of both remote and station level category are allowed to control objects.
Ethernet port	• All • COM A • Double ethernet card	-	All	Determines which ports use IEC61850. Parameter is visible if double ethernet option card is found in the device.
Configure GOOSE Subscriber from CID file allowed	• Disabled • Allowed	-	Disabled	In edition 2 of IEC 61850 GOOSE subscriber configuration is a part of the CID file. Determines if it is possible to import published GOOSE settings of another device with a CID file and set them to GOOSE input at *Tools → Communication → IEC 61850 → GOOSE subscriptions*.
General deadband	0.1…10.0 %	0.1 %	2 %	Determines the general data reporting deadband settings.
Active energy deadband	0.1…1000.0 kWh	0.1 kWh	2 kWh	Determines the data reporting deadband settings for this measurement.
Reactive energy deadband	0.1…1000.0 kVar	0.1 kVar	2 kVar	Determines the data reporting deadband settings for this measurement.
Active power deadband	0.1…1000.0 kW	0.1 kW	2 kW	Determines the data reporting deadband settings for this measurement.
Reactive power deadband	0.1…1000.0 kVar	0.1 kVar	2 kVar	Determines the data reporting deadband settings for this measurement.
Apparent power deadband	0.1…1000.0 kVA	0.1 kVA	2 kVA	Determines the data reporting deadband settings for this measurement.

© Arcteq Relays Ltd

Name	Range	Step	Default	Description
Power factor deadband	0.01…0.99	0.01	0.05	Determines the data reporting deadband settings for this measurement.
Frequency deadband	0.01…1.00 Hz	0.01 Hz	0.1 Hz	Determines the data reporting deadband settings for this measurement.
Current deadband	0.01…50.00 A	0.01 A	5 A	Determines the data reporting deadband settings for this measurement.
Residual current deadband	0.01…50.00 A	0.01 A	0.2 A	Determines the data reporting deadband settings for this measurement.
Voltage deadband	0.01…5000.00 V	0.01 V	200 V	Determines the data reporting deadband settings for this measurement.
Residual voltage deadband	0.01…5000.00 V	0.01 V	200 V	Determines the data reporting deadband settings for this measurement.
Angle measurement deadband	0.1…5.0 deg	0.1 deg	1 deg	Determines the data reporting deadband settings for this measurement.
mA deadband	0.01…5.00 mA	0.01 mA	0.10 mA	Determines the data reporting deadband settings for this measurement.
Integration time	0…10 000 ms	1 ms	0 ms	Determines the integration time of the protocol. If this parameter is set to "0 ms", no integration time is in use. See chapter "Integration time" for more information.
GOOSE Ethernet port	• All • COM A • Double ethernet card	-	All	Determines which ports can use GOOSE communication. Visible if double ethernet option card is found in the device.

5.3.1.1 Logical device mode and logical node mode

Every protection block has its own behavior (LNBeh). This behavior is determined using a combination of the protection block's mode (LNMod) and the device's mode (LDMod).

In IEC68150 mode,

- LNMod can be reported and controlled through Mod data object in all logical nodes.
- LNBeh can be reported through Beh data object in all logical nodes.
- LDMod is only visible through logical node zero's Mod data object (LLN0.Mod).

Mode and behavior values

There are 5 values defined for mode and behavior: On, Blocked, Test, Test / Blocked and Off.

Table. 5.3.1.1 - 641. Behavior descriptions.

LNBeh	On	Blocked	Test	Test / Blocked	Off
Function working	Yes	Yes	Yes	Yes	No

LNBeh	On	Blocked	Test	Test / Blocked	Off
Data quality	Relevant to data	Relevant to data	q.test = True	q.test = True	q.validity = Invalid
Output to process	Yes	No	Yes	No	No
Accept normal control	Yes	Yes	No	No	No
Accept test control	No	No	Yes	Yes	No

The communication services for the **data object Mod** do not care about the status of the LNBeh. Mod will always accept commands with **q.test** = **False.**

Data objects Mod, Beh and Health will always have **q.validity** = **Good.** Regardless of the status of LNBeh, the quality test attribute of Mod, Beh and Health shall be **q.test** = **False.**

Behavior determination

The values for LDMod and LNMod are settable by the user by using HMI, setting tool, or IEC 61850 client. The value for LNBeh are then determined using following rules.

- If either LDMod or LNMod is Off, LNBeh is Off.
- Otherwise,
    - If either LDMod or LNMod is set to either "Test" or "Test / Blocked" mode, LNBeh is in Test mode.
    - If either LDMod or LNMod is set to either "Blocked" or "Test / Blocked" mode, LNBeh is in Blocked mode.
    - If LNBeh still doesn't have anything, LNBeh is "On".

All the possible combinations are laid out in the following table.

Table. 5.3.1.1 - 642. All possible logical device and logical node combinations.

LDMod	LNMod	LNBeh
Off	Off	Off
	Test / Blocked	Off
	Test	Off
	Blocked	Off
	On	Off
Test / Blocked	Off	Off
	Test / Blocked	Test / Blocked
	Test	Test / Blocked
	Blocked	Test / Blocked
	On	Test / Blocked
Test	Off	Off
	Test / Blocked	Test / Blocked

© Arcteq Relays Ltd
IM00099

LDMod	LNMod	LNBeh
	Test	Test
	Blocked	Test / Blocked
	On	Test
Blocked	Off	Off
	Test / Blocked	Test / Blocked
	Test	Test / Blocked
	Blocked	Blocked
	On	Blocked
On	Off	Off
	Test / Blocked	Test / Blocked
	Test	Test
	Blocked	Blocked
	On	On

Processing of incoming data in different behaviors

This part only applies to incoming data with quality information.

The table below gives the functional processing of the data in different behavior states as defined by the standard. Logical nodes should process receiving data according to their quality information:

- Processed as valid - Reacts according to the quality.
- Processed as invalid - Reacts as if the quality of the data had been invalid.
- Processed as questionable - The application decides how to consider the status value.
- Not processed - Do not belong to communication services, no quality bit can be evaluated.

Table. 5.3.1.1 - 643. Processing of incoming data in different behaviors as defined by the standard.

	On	Blocked	Test	Test / Blocked	Off
q.validity = Good q.test = False	Processed as valid	Processed as valid	Processed as valid	Processed as valid	Not processed
q.validity = Questionable q.test = False	Processed as questionable	Processed as questionable	Processed as questionable	Processed as questionable	Not processed
q.validity = Good q.test = True	Processed as invalid	Processed as invalid	Processed as valid	Processed as valid	Not processed
q.validity = Questionable q.test = True	Processed as invalid	Processed as invalid	Processed as questionable	Processed as questionable	Not processed

	On	Blocked	Test	Test / Blocked	Off
q.validity = Invalid q.test = True/ False	Processed as invalid	Processed as invalid	Processed as invalid	Processed as invalid	Not processed

Arcteq's implementation treats “Processed as questionable” and “Processed as invalid” in the same way with “Not processed”. Only "Processed as valid" is passed to the application.

Table. 5.3.1.1 - 644. Arcteq's implementation of processing of incoming data in different behaviors.

	On	Blocked	Test	Test / Blocked	Off
q.validity = Good q.test = False	Processed as valid	Processed as valid	Processed as valid	Processed as valid	
q.validity = Questionable q.test = False					
q.validity = Good q.test = True			Processed as valid	Processed as valid	
q.validity = Questionable q.test = True					
q.validity = Invalid q.test = True/False					

Using mode and behavior

Enabling LDMod and LNMod changing can be done at *General → Device info*.

Table. 5.3.1.1 - 645. Parameters to allow changing of LNMod and LDMod.

Name	Range	Default	Description
Allow setting of device mode	• Prohibited • From HMI/ setting tool only • Allowed	Prohibited	Allows global mode to be modified from setting tool, HMI and IEC61850. Prohibited: Cannot be changed. From HMI/setting tool only: Can only be changed from the setting tool or HMI. Allowed: Can be changed from the setting tool, HMI, and IEC 61850 client.
Allow setting of individual LN mode	• Prohibited • From HMI/ setting tool only • Allowed	Prohibited	Allow local modes to be modified from setting tool, HMI and IEC61850. This parameter is visible only when "Allow setting of device mode" is enabled. Prohibited: Cannot be changed. From HMI/setting tool only: Can only be changed from the setting tool or HMI Allowed: Can be changed from the setting tool, HMI, and IEC 61850 client.

© Arcteq Relays Ltd

When enabled it is possible to change LDMod at *Communication → Protocols → IEC61850*.

Table. 5.3.1.1 - 646. Parameter for changing logical device mode.

Name	Range	Default	Description
Allow setting of device mode	• On • Blocked • Test • Test/ Blocked • Off	On	Set mode of logical device. This parameter is visible only when *Allow setting of device mode* is enabled in *General* menu.

Each protection, control and monitoring function has its own logical node mode which can be changed individually. This parameter is found in the functions *Info*-menu. Each function also reports its behavior. Behavior of the function is influenced by the status of the device mode setting and the functions mode setting.

Table. 5.3.1.1 - 647. LNMod parameters.

Name	Range	Default	
LN mode	• On • Blocked • Test • Test/ Blocked • Off	On	Set mode of function logical node. This parameter is visible only when *Allow setting of individual LN mode* is enabled in *General* menu.
LN behavior	• On • Blocked • Test • Test/ Blocked • Off	On	Displays the mode of the function logical node. This parameter is visible only when *Allow setting of individual LN mode* is enabled in *General* menu.

5.3.1.2 GOOSE

Arcteq devices support both GOOSE publisher and GOOSE subscriber. GOOSE subscriber is enabled with the "GOOSE subscriber enable" parameter at *Communication → Protocols → IEC 61850/GOOSE*. The GOOSE inputs are configured using either the local HMI or the AQtivate software.

There are up to 64 GOOSE inputs available for use. Each of the GOOSE inputs also has a corresponding input quality signal which can also be used in internal logic. The quality is good, when the input quality status is "low" (that is, when the quality is marked as "0"). The value of the input quality can switch on as a result of a GOOSE time-out or a configuration error, for example. The status and quality of the various logical input signals can be viewed at the *GOOSE IN status* and *GOOSE IN quality* tabs at *Control → Device I/O → Logical signals*.

General GOOSE setting

The table below presents general settings for GOOSE publisher.

Table. 5.3.1.2 - 648. General GOOSE publisher settings.

Name	Range	Description
GOOSE control block 1 simulation bit	• Disabled (Default) • Enabled	The publisher will publish frames with simulation bit active if enabled. For GOOSE simulation testing purposes.
GOOSE control block 2 simulation bit		

The table below presents general settings for GOOSE subscriber

Table. 5.3.1.2 - 649. General GOOSE subscriber settings.

Name	Range	Description
GOOSE subscriber enable	• Disabled (Default) • Enabled	Enables or disables GOOSE subscribing for the device.
Not used GOOSE input Quality	• Bad quality (1) • Good quality (0)	Defines what state should GOOSE input quality signal to be in the logic if the input has been set as "disabled".
Subscriber checks GoCBRef	• No (Default) • Yes	When subscriber sees GOOSE frame it checks APPID and Conf. Rev but can also check if GoCBRef or SqNum match.
Subscriber checks SqNum		
Subscriber process simulation messages	• No (Default) • Yes	Subscriber can be set to process frames which are published with simulation bit high if enabled. The subscriber can still subscribe to non-simulated frames from a publisher until that a simulated frame is received from a publisher. From that point on, only simulated frames are accepted from that publisher. For other publishers, non-simulated frames are accepted normally (given no simulated frame is received from that publisher). This behavior ends when the setting is set back to No.

GOOSE input settings

The table below presents the different settings available for all 64 GOOSE inputs.

These settings can be found from *Communication → Protocols → IEC61850/GOOSE → GOOSE Input Settings*.

© Arcteq Relays Ltd
IM00099

Table. 5.3.1.2 - 650. GOOSE input settings.

Name	Range	Description
In use	• No (Default) • Yes	Enables and disables the GOOSE input in question.
Application ID ("AppID")	0×0…0×3FFF	Defines the application ID that will be matched with the publisher's GOOSE control block.
Configuration revision ("ConfRev")	1…2^{32}-1	Defines the configuration revision that will be matched with the publisher's GOOSE control block.
Data index ("DataIdx")	0…99	Defines the data index of the value in the matched published frame. It is the status of the GOOSE input.
NextIdx is quality	• No (Default) • Yes	Selects whether or not the next received input is the quality bit of the GOOSE input.
Data type	• Boolean (Default) • Integer • Unsigned • Floating point	Selects the data type of the GOOSE input.
Control block reference	-	GOOSE subscriber can be set to check the GCB reference of the published GOOSE frame. This setting is automatically filled when Ed2 GOOSE configuration is done by importing cid file of the publisher.

GOOSE input descriptions

Each of the GOOSE inputs can be given a description. The user defined description are displayed in most of the menus:

- logic editor
- matrix
- block settings
- event history
- disturbance recordings
- etc.

These settings can be found from *Control → Device IO → Logical Signals → GOOSE IN Description*.

Table. 5.3.1.2 - 651. GOOSE input user description.

Name	Range	Default	Description
User editable description GI x	1...31 characters	GOOSE IN x	Description of the GOOSE input. This description is used in several menu types for easier identification.

GOOSE input values

Each of the GOOSE subscriber inputs (1...64) have indications listed in the following table. These indications can be found from *Communication → Protocols → IEC61850/GOOSE → GOOSE input values*.

Table. 5.3.1.2 - 652. GOOSE input indications

Name	Range	Description
Subscription status	• Not Active • Active	When active correct data received and passed to application.
Processing simulation message	• False • True	When true subscriber is processing simulation frames for this input (and rejecting non-simulated frames).
Needs commissioning	• False • True	When true configuration doesn't match the received frame (goCBRef, confRev).
Last received state number	0...4294967295	Status number (stNum) of the last data passed to application.
GOOSE IN X boolean value	0...1	GOOSE input 1...64 boolean value.
GOOSE IN X analog value	-3.4E+38...3.4E+38	GOOSE input 1...64 analog value.
GOOSE IN X quality	• Old data • Failure • Oscillatory • Bad reference • Out of range • Overflow • Invalid • Reserved/ Questionable • Operator blocked • Test • Substituted • Inaccurate • Inconsistent	GOOSE input quality indication.
GOOSE IN X time	DD/MM/YYYY HH:MM:SS	Time when publisher sent GOOSE frame.
GOOSE IN X time fraction	0...4294967295 µs	Microseconds of the publisher GOOSE frame.

GOOSE events

GOOSE signals generate events from status changes. The user can select which event messages are stored in the main event buffer: ON, OFF, or both. The events triggered by the function are recorded with a time stamp and with process data values. The time stamp resolution is 1 ms.

© Arcteq Relays Ltd

Table. 5.3.1.2 - 653. GOOSE event

Event block name	Event name	Description
GOOSE1...GOOSE2	GOOSE IN 1...64 ON/OFF	Status change of GOOSE input.
GOOSE3...GOOSE4	GOOSE IN 1...64 quality Bad/ Good	Status change of GOOSE inputs quality.
GOOSE5...GOOSE6	GOOSE Subscription status 1...64 Active/Not active	When active correct data received and passed to application.
GOOSE7...GOOSE8	GOOSE Processing simulated messages 1...64 True/False	When true subscriber is processing simulation frames for this input (and rejecting non-simulated frames).
GOOSE9...GOOSE10	GOOSE Subscription needs commissioning 1...64 True/ False	When true configuration doesn't match the received frame (goCBRef, confRev).

Setting the publisher

The configuration of the GOOSE publisher is done using the IEC 61850 tool in AQtivate (*Tools* → *Communication* → *IEC 61850*). Refer to *AQtivate-200 Instruction manual* for more information on how to set up GOOSE publisher.

5.3.2 Modbus TCP and Modbus RTU

The device supports both Modbus TCP and Modbus RTU communication. Modbus TCP uses the Ethernet connection to communicate with Modbus TCP clients. Modbus RTU is a serial protocol that can be selected for the available serial ports.

The user can enable the Modbus TCP protocol at *Communication* → *Protocols* → *Modbus TCP*. The user can enable the Modbus RTU protocol at *Communication* → *Connections*.

The following Modbus function types are supported:

- Read multiple holding registers (function code 3)
- Write single holding register (function code 6)
- Write multiple holding registers (function code 16)
- Read/Write multiple registers (function code 23)

The following data can be accessed using both Modbus TCP and Modbus RTU:

- Device measurements
- Device I/O
- Commands
- Events
- Time

Once the configuration file has been loaded, the user can access the Modbus map of the device via the AQtivate software (*Tools* → *Communication* → *Modbus Map*). Please note that holding registers start from 1. Some masters might begin numbering holding register from 0 instead of 1; this will cause an offset of 1 between the device and the master. Modbus map can be edited with Modbus Configurator (*Tools* → *Communication* → *Modbus Configurator*).

Table. 5.3.2 - 654. Modbus TCP settings.

Parameter	Range	Description
Enable Modbus TCP	• Disabled • Enabled	Enables and disables the Modbus TCP on the Ethernet port.
IP port	0…65 535	Defines the IP port used by Modbus TCP. The standard port (and the default setting) is 502.
Ethernet port	• All • COM A • Double Ethernet card	Defines which ethernet ports are available for Modbus connection. Visible if any double ethernet option card is installed in the device.
Event read mode	• Get oldest available • Continue previous connection • New events only	Get oldest event possible (Default) Continue with the event idx from previous connection Get only new events from connection time and forward.

Table. 5.3.2 - 655. Modbus RTU settings.

Parameter	Range	Description
Slave address	1…247	Defines the Modbus RTU slave address for the unit.

Reading events

Modbus protocol does not support time-stamped events by standard definition. This means that every vendor must come up with their own definition how to transfer events from the device to the client. Events can be read from HR17...HR22 holding registers. HR17 contains the event-code, HR18...20 contains the time-stamp in UTC, HR21 contains a sequential index and HR22 is reserved for future expansion. See the Modbus Map for more information. The event-codes and their meaning can be found from Event list (*Tools → Events ang Logs → Event list* in setting tool). The event-code in HR17 is 0 if no new events can be found in the device event-buffer. Every time HR17 is read from client the event in event-buffer is consumed and on following read operation the next un-read event information can be found from event registers. HR11…HR16 registers contains a back-up of last read event. This is because some users want to double-check that no events were lost

5.3.3 IEC 103

IEC 103 is the shortened form of the international standard IEC 60870-5-103. The device is able to run as a secondary (slave) station. The IEC 103 protocol can be selected for the serial ports that are available in the device. A primary (master) station can then communicate with the device and receive information by polling from the slave device. The transfer of disturbance recordings is not supported.

The user can enable the IEC 103 protocol at *Communication → Connections*.

NOTE: Once the configuration file has been loaded, the IEC 103 map of the device can be found in the AQtivate software (*Tools → IEC 103 map*).

© Arcteq Relays Ltd

Table. 5.3.3 - 656. IEC 103 settings.

Name	Range	Step	Default	Description
Slave address	1…254	1	1	Defines the IEC 103 slave address for the unit.
Measurement interval	0…60 000 ms	1 ms	2000 ms	Defines the interval for the measurements update.

The following table presents the setting parameters for the IEC 103 protocol.

5.3.4 IEC 101/104

The standards IEC 60870-5-101 and IEC 60870-5-104 are closely related. Both are derived from the IEC 60870-5 standard. On the physical layer the IEC 101 protocol uses serial communication whereas the IEC 104 protocol uses Ethernet communication. The IEC 101/104 implementation works as a slave in the unbalanced mode.

For detailed information please refer to the IEC 101/104 interoperability document (https://www.arcteq.com/documents-and-software/ → AQ-ONE → Resources → "AQ-ONE IEC101 & IEC104 interoperability").

The user can enable the IEC104 protocol at *Communication → Protocols → IEC101/104*. The user can enable the IEC101 protocol at *Communication → Connections*.

IEC 101 settings

Table. 5.3.4 - 657. IEC 101 settings.

Name	Range	Step	Default	Description
Common address of ASDU	0…65 534	1	1	Defines the common address of the application service data unit (ASDU) for the IEC 101 communication protocol.
Common address of ASDU size	1…2	1	2	Defines the size of the common address of ASDU.
Link layer address	0…65 534	1	1	Defines the address for the link layer.
Link layer address size	1…2	1	2	Defines the address size of the link layer.
Information object address size	2…3	1	3	Defines the address size of the information object.
Cause of transmission size	1…2	1	2	Defines the cause of transmission size.

IEC101/104 measurement scaling coefficients

Table. 5.3.4 - 658. Measurement scaling coefficient settings.

Name	Range	Default	Description
General scaling coef.	• No scaling • 1/10 • 1/100 • 1/1000 • 1/10000 • 1/100000 • 1/1000000 • 10 • 100 • 1000 • 10000 • 100000 • 1000000	No scaling	Optional scaling factor for IEC101/IEC104 communication. Values from 1/10 to 1/1,000,000 apply a division to the measurement. Values from 10 to 1,000,000 apply a multiplication to the measuremen
Active energy scaling coef.			
Reactive energy scaling coef.			
Active power scaling coef.			
Reactive power scaling coef.			
Apparent power scaling coef.			
Power factor scaling coef.			
Frequency scaling coef.			
Current scaling coef.			
Residual current scaling coef.			
Voltage scaling coef.			
Residual voltage scaling coef.			
Angle measurement scaling coef.			
mA scaling coef.			

IEC101/104 deadband settings

Table. 5.3.4 - 659. Analog change deadband settings.

Name	Range	Step	Default	Description
General deadband	0.1…10.0%	0.1%	2%	Determines the general data reporting deadband settings.
Active energy deadband	0.1…1000.0kWh	0.1kWh	2kWh	Determines the data reporting deadband settings for this measurement.
Reactive energy deadband	0.1…1000.0kVar	0.1kVar	2kVar	
Active power deadband	0.1…1000.0kW	0.1kW	2kW	

© Arcteq Relays Ltd
IM00099

Name	Range	Step	Default	Description
Reactive power deadband	0.1…1000.0kVar	0.1kVar	2kVar	
Apparent power deadband	0.1…1000.0kVA	0.1kVA	2kVA	
Power factor deadband	0.01…0.99	0.01	0.05	
Frequency deadband	0.01…1.00Hz	0.01Hz	0.1Hz	
Current deadband	0.01…50.00A	0.01A	5A	
Residual current deadband	0.01…50.00A	0.01A	0.2A	
Voltage deadband	0.01…5000.00V	0.01V	200V	
Residual voltage deadband	0.01…5000.00V	0.01V	200V	
Angle measurement deadband	0.1…5.0deg	0.1deg	1deg	
mA measurement deadband	0.01…5.00 mA	0.01 mA	0.10 mA	
Integration time	0…10 000ms	1ms	-	Determines the integration time of the protocol. If this parameter is set to "0 ms", no integration time is in use. See chapter "Integration time" for more information.

5.3.5 SPA

The device can act as a SPA slave. SPA can be selected as the communication protocol for the RS-485 port (Serial COM1). When the device has a serial option card, the SPA protocol can also be selected as the communication protocol for the serial fiber (Serial COM2) ports or RS-232 (Serial COM3) port. Please refer to the chapter "Construction and installation" in the device manual to see the connections for these modules.

The data transfer rate of SPA is 9600 bps, but it can also be set to 19 200 bps or 38 400 bps. As a slave the device sends data on demand or by sequenced polling. The available data can be measurements, circuit breaker states, function starts, function trips, etc. The full SPA signal map can be found in AQtivate (*Tools → SPA map*).

The SPA event addresses can be found at *Tools → Events and logs → Event list*.

The user can enable the SPA protocol at *Communication → Connections*.

Table. 5.3.5 - 660. SPA setting parameters.

Name	Range	Description
SPA address	1...899	SPA slave address.
UTC time sync	• Disabled • Enabled	Determines if UTC time is used when synchronizing time. When disabled it is assumed time synchronization uses local time. If enabled it is assumed that UTC time is used. When UTC time is used the timezone must be set at *Commands → Set time zone*.

NOTICE!
To access SPA map and event list, an .aqs configuration file should be downloaded from the device.

5.3.6 DNP3

DNP3 is a protocol standard which is controlled by the DNP Users Group (www.dnp.org). The implementation of a DNP3 slave is compliant with the DNP3 subset (level) 2, but it also contains some functionalities of the higher levels. For detailed information please refer to the DNP3 Device Profile document (https://www.arcteq.com/documents-and-software/ → AQ-ONE → Resources).

The user can enable the DNP3 TCP protocol at *Communication → Protocols → DNP3*. The user can enable the DNP3 serial protocol at *Communication → Connections*.

General settings

The following table describes the DNP3 setting parameters.

Table. 5.3.6 - 661. Settings.

Name	Range	Step	Default	Description
Enable DNP3 TCP	• Disabled • Enabled	-	Disabled	Enables and disables the DNP3 TCP communication protocol when the Ethernet port is used for DNP3. If a serial port is used, the DNP3 protocol can be enabled from *Communication → DNP3*.
IP port	0…65 535	1	20 000	Defines the IP port used by the protocol.
Ethernet port	• All • COM A • Double Ethernet card	-	All	Defines which ethernet ports are available for Modbus connection. Visible if any double ethernet option card is installed in the device.
Slave address	1…65 519	1	1	Defines the DNP3 slave address of the unit.
Master address	1…65 534	1	2	Defines the address for the allowed master.
Link layer time-out	0…60 000ms	1ms	0ms	Defines the length of the time-out for the link layer.
Link layer retries	1…20	1	1	Defines the number of retries for the link layer.

© Arcteq Relays Ltd

Name	Range	Step	Default	Description
Diagnostic - Error counter	0…2^{32}-1	1	-	Counts the total number of errors in received and sent messages.
Diagnostic - Transmitted messages	0…2^{32}-1	1	-	Counts the total number of transmitted messages.
Diagnostic - Received messages	0…2^{32}-1	1	-	Counts the total number of received messages.

Default variations

Table. 5.3.6 - 662. Default variations.

Name	Range	Default	Description
Group 1 variation (BI)	• Var 1 • Var 2	Var 1	Selects the variation of the binary signal.
Group 2 variation (BI change)	• Var 1 • Var 2	Var 2	Selects the variation of the binary signal change.
Group 3 variation (DBI)	• Var 1 • Var 2	Var 1	Selects the variation of the double point signal.
Group 4 variation (DBI change)	• Var 1 • Var 2	Var 2	Selects the variation of the double point signal.
Group 20 variation (CNTR)	• Var 1 • Var 2 • Var 5 • Var 6	Var 1	Selects the variation of the control signal.
Group 22 variation (CNTR change)	• Var 1 • Var 2 • Var 5 • Var 6	Var 5	Selects the variation of the control signal change.
Group 30 variation (AI)	• Var 1 • Var 2 • Var 3 • Var 4 • Var 5	Var 5	Selects the variation of the analog signal.
Group 32 variation (AI change)	• Var 1 • Var 2 • Var 3 • Var 4 • Var 5 • Var 7	Var 5	Selects the variation of the analog signal change.

DNP3 measurement scaling coefficients

Table. 5.3.6 - 663. Measurement scaling coefficient settings.

Name	Range	Default	Description
General scaling coef.	• No scaling • 1/10 • 1/100 • 1/1000 • 1/10000 • 1/ 100000 • 1/ 1000000 • 10 • 100 • 1000 • 10000 • 100000 • 1000000	No scaling	Optional scaling factor for SPA communication. Values from 1/10 to 1/1,000,000 apply a division to the measurement. Values from 10 to 1,000,000 apply a multiplication to the measuremen
Active energy scaling coef.			
Reactive energy scaling coef.			
Active power scaling coef.			
Reactive power scaling coef.			
Apparent power scaling coef.			
Power factor scaling coef.			
Frequency scaling coef.			
Current scaling coef.			
Residual current scaling coef.			
Voltage scaling coef.			
Residual voltage scaling coef.			
Angle measurement scaling coef.			
mA scaling coef.			

DNP3 deadband settings

Table. 5.3.6 - 664. Analog change deadband settings.

Name	Range	Step	Default	Description
General deadband	0.1…10.0%	0.1%	2%	Determines the general data reporting deadband settings.
Active energy deadband	0.1…1000.0kWh	0.1kWh	2kWh	Determines the data reporting deadband settings for this measurement.
Reactive energy deadband	0.1…1000.0kVar	0.1kVar	2kVar	
Active power deadband	0.1…1000.0kW	0.1kW	2kW	

© Arcteq Relays Ltd

Name	Range	Step	Default	Description
Reactive power deadband	0.1…1000.0kVar	0.1kVar	2kVar	
Apparent power deadband	0.1…1000.0kVA	0.1kVA	2kVA	
Power factor deadband	0.01…0.99	0.01	0.05	
Frequency deadband	0.01…1.00Hz	0.01Hz	0.1Hz	
Current deadband	0.01…50.00A	0.01A	5A	
Residual current deadband	0.01…50.00A	0.01A	0.2A	
Voltage deadband	0.01…5000.00V	0.01V	200V	
Residual voltage deadband	0.01…5000.00V	0.01V	200V	
Angle measurement deadband	0.1…5.0deg	0.1deg	1deg	
mA deadband	0.01…5.00 mA	0.01 mA	0.10 mA	
Integration time	0…10 000ms	1ms	0ms	Determines the integration time of the protocol. If this parameter is set to "0 ms", no integration time is in use. See chapter "Integration time" for more information.

5.3.7 Modbus I/O

The Modbus I/O protocol can be selected to communicate on the available serial ports. The Modbus I/O is actually a Modbus/RTU master implementation that is dedicated to communicating with serial Modbus/RTU slaves such as RTD input modules. Up to three (3) Modbus/RTU slaves can be connected to the same bus polled by the Modbus I/O implementation. These are named I/O Module A, I/O Module B and I/O Module C. Each of the modules can be configured using parameters in the following two tables.

Table. 5.3.7 - 665. Module settings.

Name	Range	Description
I/O module X address	0…247	Defines the Modbus unit address for the selected I/O Module (A, B, or C). If this setting is set to "0", the selected module is not in use.
Module x type	• ADAM-4018+ • ADAM-4015	Selects the module type.

Name	Range	Description
Channels in use	Channel 0…Channel 7 (or None)	Selects the number of channels to be used by the module.

Table. 5.3.7 - 666. Channel settings.

Name	Range	Step	Default	Description
Thermocouple type	• +/- 20mA • 4…20mA • Type J • Type K • Type T • Type E • Type R • Type S	-	4…20mA	Selects the thermocouple or the mA input connected to the I/O module. Types J, K, T and E are nickel-alloy thermocouples, while Types R and S are platinum/rhodium-alloy thermocouples.
Input value	-101.0…2 000.0	0.1	-	Displays the input value of the selected channel.
Input status	• Invalid • OK	-	-	Displays the input status of the selected channel.

5.3.8 OPCUA

Table. 5.3.8 - 667. OPCUA settings.

Name	Range	Step	Default	Description
OPCUA mode	• Disabled • Enabled	-	Disabled	Enables or disables the OPCUA protocol.
OPCUA reconfigure	• - • Reconfigure	-	-	Reconfigures the OPCUA and takes the settings configured in *Tools → Communication → OPCUA* into use.
OPCUA Flat struct enable	• Disabled • Enabled	-	Disabled	

5.3.9 Integration time

When integration time is not used, measurement values are updated only when the change exceeds the configured deadband. If the deadband is set too low, measurements may be reported too frequently, creating unnecessary traffic. If the deadband is configured too high, the measurement may almost never update. When integration time is used, large changes are still reported quickly, but smaller changes are accumulated over time and eventually reported even if the deadband is not very sensitive.

With integration time enabled, the following parameters determine when a measurement is reported:

- deadband setting of the measurement
- integration time setting
- latest reported measurement value
- measured value.

© Arcteq Relays Ltd

An integrated value is calculated over time using these parameters. Once this integrated value exceeds the deadband, a new measurement update is sent.

Figure. 5.3.9 - 290. Integration time formula.

$$Integrated\ value = |Measured\ value - Latest\ reported\ value| * \left(\frac{t}{Integration\ time}\right)$$

Figure. 5.3.9 - 291. Example graph showing how integration time affects measurement reporting. Small changes take longer to increase the integrated value over the deadband setting (blue area). Big changes meet the deadband criteria faster (red area).

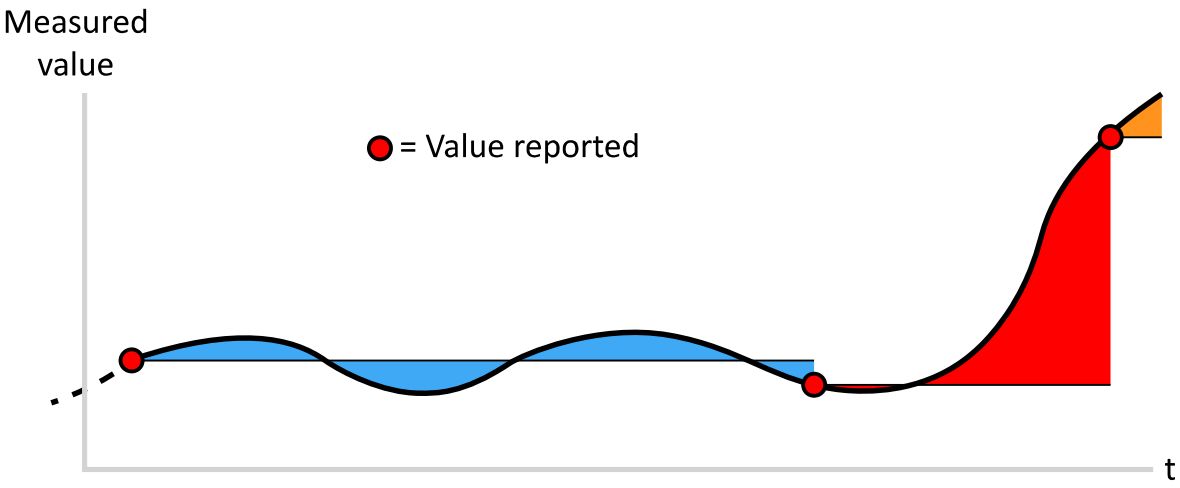

The time it takes for a value to be updated with the configured settings can be roughly estimated with the following formula:

Figure. 5.3.9 - 292. Measurement reporting delay when integration time is used.

$$t = \frac{Deadband\ setting * Integration\ time\ setting}{|Measured\ value - Latest\ reported\ value|}$$

If the latest reported value was 5.00 A and the measurement rises up to 6.00 A and stays stable, and the deadband setting for current is 2 A and the integration time setting is 1 s, we get the following result:

Figure. 5.3.9 - 293. Calculation example for estimating reporting time when integration time is in use.

$$t = \frac{2A * 1s}{|6A - 5A|} = 2s$$

5.4 Analog fault registers

At *Communication → General I/O → Analog fault registers* the user can set up to twelve (12) channels to record the measured value when a protection function starts or trips. These values can be read in two ways: locally from this same menu, or through a communication protocol if one is in use.

The following table presents the setting parameters available for the 12 channels.

Table. 5.4 - 668. Fault register settings.

Name	Range	Step	Default	Description
Select record source	Not in use I>, I>>, I>>>, I>>>> (IL1, IL2, IL3) Id>, Id>>, Id>>>, Id>>>> (IL1, IL2, IL3) I0>, I0>>, I0>>>, I0>>>> (I0) I0d>, I0d>>, I0d>>>, I0d>>>> (I0) FLX (Fault locator)	-	Not in use	Selects the protection function and its stage to be used as the source for the fault register recording. The user can choose between non-directional overcurrent, directional overcurrent, non-directional earth fault, directional earth fault, and fault locator functions.
Select record trigger	• TRIP signal • START signal • START and TRIP signals	-	TRIP signal	Selects what triggers the fault register recording: the selected function's TRIP signal, its START signal, or either one.
Recorded fault value	- 1000 000.00…1 000 000.00	0.01	-	Displays the recorded measurement value at the time of the selected fault register trigger.

5.5 Modbus Gateway

Figure. 5.5 - 294. Example setup of Modbus Gateway application.

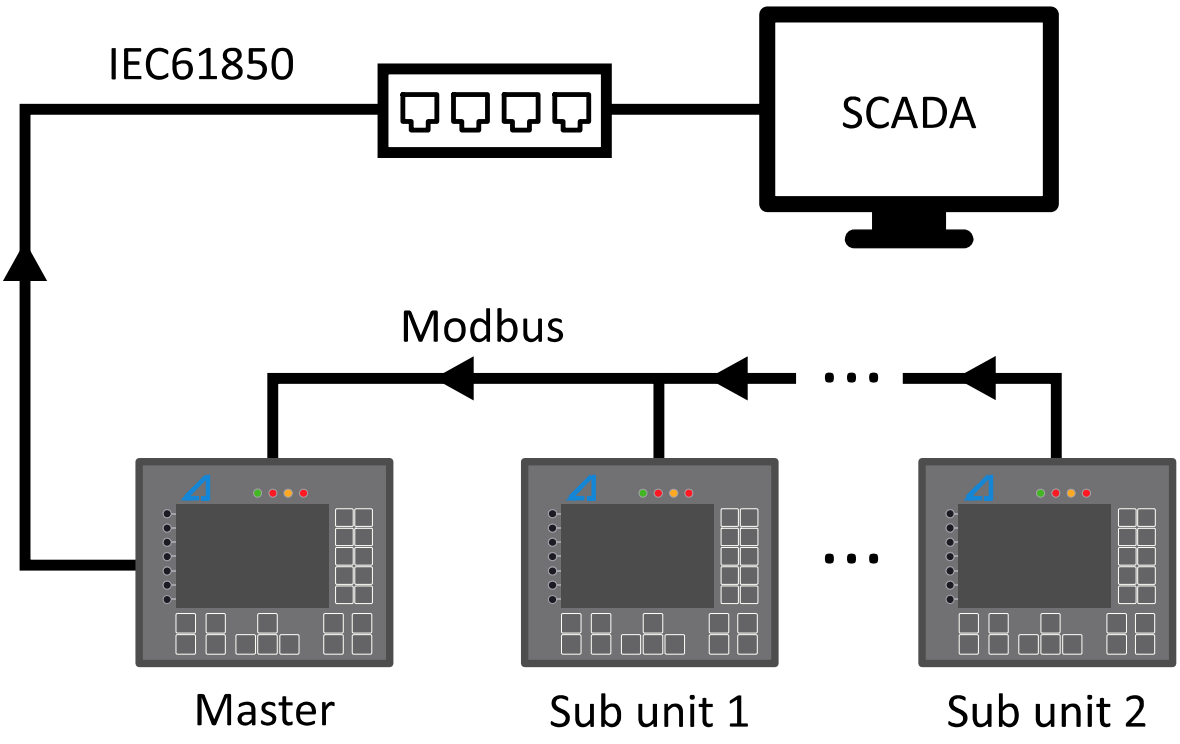

© Arcteq Relays Ltd

The device can be setup as a Modbus Gateway (i.e. master). Modbus Gateway device can import messages (measurements, status signals etc.) from external Arcteq and third-party devices. RS-485 serial communication port. Up to 32 sub units can be connected to a master unit. These messages can then be used for controlling logic in the master device, display the status in user created mimic. Binary signals can be reported forward to SCADA with IEC61850, IEC101, IEC103, IEC104, Modbus, DNP3 or SPA.

Arc protection relays AQ-103 and AQ-110x Modbus variants are designed to work as a sub unit with Modbus Gateway master. More details can be found in *AQ-103 Instruction manual* and *AQ-110x Instruction manual* (https://www.arcteq.com/documents-and-software/). Also see application example at the end of this chapter.

Modbus Gateway and its basic settings can be found from *Communication → Modbus Gateway*. General settings-menu displays the health of connection to each sub unit.

Table. 5.5 - 669. General settings

Name	Range	Description
Modbus Gateway mode	• Disabled (Default) • Enabled	Enables or disables Modbus Gateway.
Modbus Gateway reconfigure	- Reconfigure	Setting this parameter to "Reconfigure" takes new settings into use. Parameter returns back to "-" automatically.
Quality of Modbus Sub unit 1...32	• OK • Old data • Data questionable • Modbus error • Send fail • Receive fail	Quality of each connected sub unit.

Imported signals

Modbus Gateway supports importing of measurements, bits, double bits, counters and integer signals. Up to 128 signals can be imported of each signal type with the exception of double bits (32).

Table. 5.5 - 670. Imported signals

Name	Range
Imported measurement 1-128	-3.4E+38...3.4E+38
Imported bit signal 1-128	0...1
Imported double bit data 1-32	0...3
Imported counter data 1-128	0...4294967295
Imported integer signal 1-128	-2147483648...2147483647

To assign the signals use Modbus Gateway editor (*Tools → Communication → Modbus Gateway*). Detailed description of this tool can be found in *AQtivate Instruction manual* (https://www.arcteq.com/documents-and-software/).

All imported signals can be given a description. The description will be displayed in most of menus with the signal (logic editor, matrix, block settings etc.).

Table. 5.5 - 671. Imported signal user description.

Name	Range	Default	Description
Describe measurement x	1...31 characters	Acq. Meas x	User settable description for the signal. This description is used in several menu types for easier identification.
Describe bit signal x		Acq. Bit x	
Describe doube bit signal x		Acq. Binary x	
Describe counter signal x		Acq. Counter x	
Describe integer signal x		Acq. Integer x	

Events

The Modbus Gateway generates events the status changes in imported bits and double bits. The user can select which event messages are stored in the main event buffer: ON, OFF, or both.

Table. 5.5 - 672. Event messages

Event block name	Event names
MGWB1	Bit 1...Bit 32 (ON, OFF)
MGWB2	Bit 33...Bit 64 (ON, OFF)
MGWB3	Bit 65...Bit 96 (ON, OFF)
MGWB4	Bit 97...Bit 128 (ON, OFF)
MGWD1	Double Bit 1... Double bit 16 (ON/ON, OFF/OFF, ON/OFF, OFF/ON)
MGWD2	Double Bit 17... Double bit 32 (ON/ON, OFF/OFF, ON/OFF, OFF/ON)

Connect AQ 100 series devices to Modbus Gateway device

AQ 100 is a sophisticated microprocessor-based arc flash protection product series for arc light detection. AQ 100 series devices with communication option provide communication through RS-485 and Modbus protocol. Through the Modbus communication AQ 100 series devices connect to a Modbus master device for indication of exact fault location and to a SCADA system either trough.

AQ 100 series arc protection devices are able to report various signals like number of installed sensors, sensor activations, I/O activations etc. Holding registers of each signal can be found in the AQ 100 instruction manuals (https://www.arcteq.com/documents-and-software/).

© Arcteq Relays Ltd
IM00099

Figure. 5.5 - 295. Modbus master device can receive signals through Modbus and use them to control logic of the device, create mimics and report the values to IEC 61850.

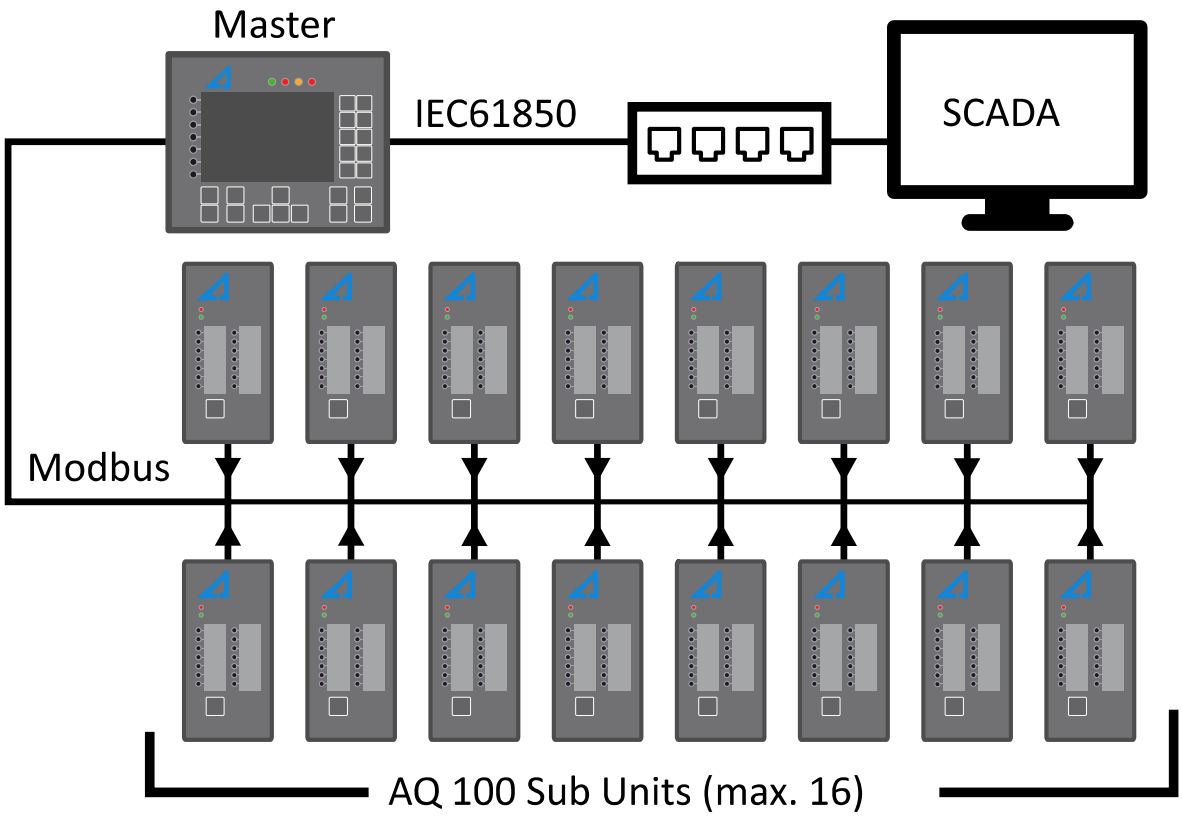

The signals received from AQ 100 series device can be used for fault indications on the master device and for reporting the signals forward with IEC 61850 or other communication protocol. Fault indication can be done by setting up an alarm display for each incoming signal or by building a mimic.

Figure. 5.5 - 296. To report imported bit signals to SCADA the signals must be connected to a logical output.

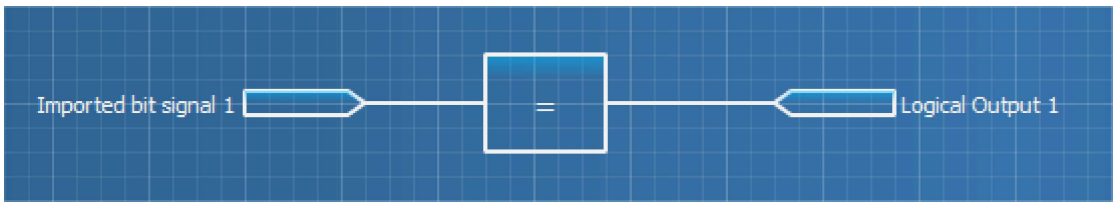

Figure. 5.5 - 297. Example mimic where sensor activation location is indicated with a symbol.

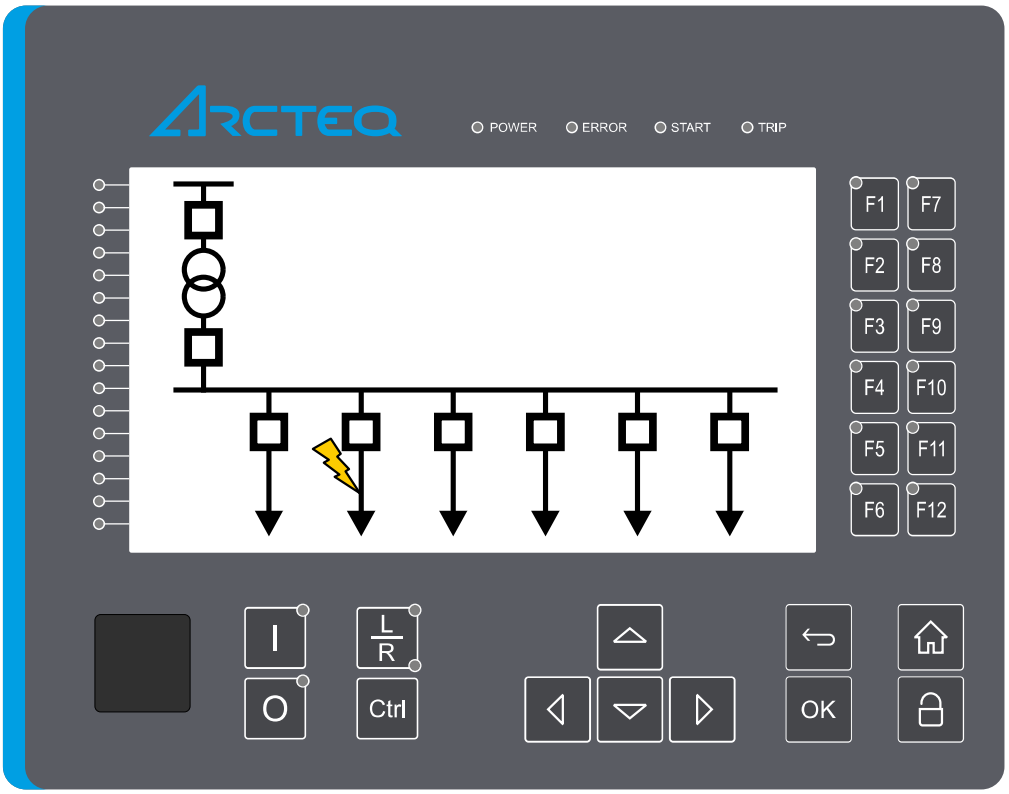

© Arcteq Relays Ltd
IM00099

6 Construction and installation

6.1 Construction

As a standard configuration the device includes the CPU module (which consists of the CPU, a number of inputs and outputs, and the power supply). Available measurement and option card slots depend on the size of the device:

- Small: 6 slots (AQ-ONE-SXXXXXXX-AAAAAA)
- Medium: 10 slots (AQ-ONE-MXXXXXXX-AAAAAAAAAA)
- Large: 14 slots (AQ-ONE-LXXXXXXX-AAAAAAAAAAAAAA)

The image below presents the three sizes.

Figure. 6.1 - 298. AQ-ONE small/medium/large back panels (no measurement cards or option cards).

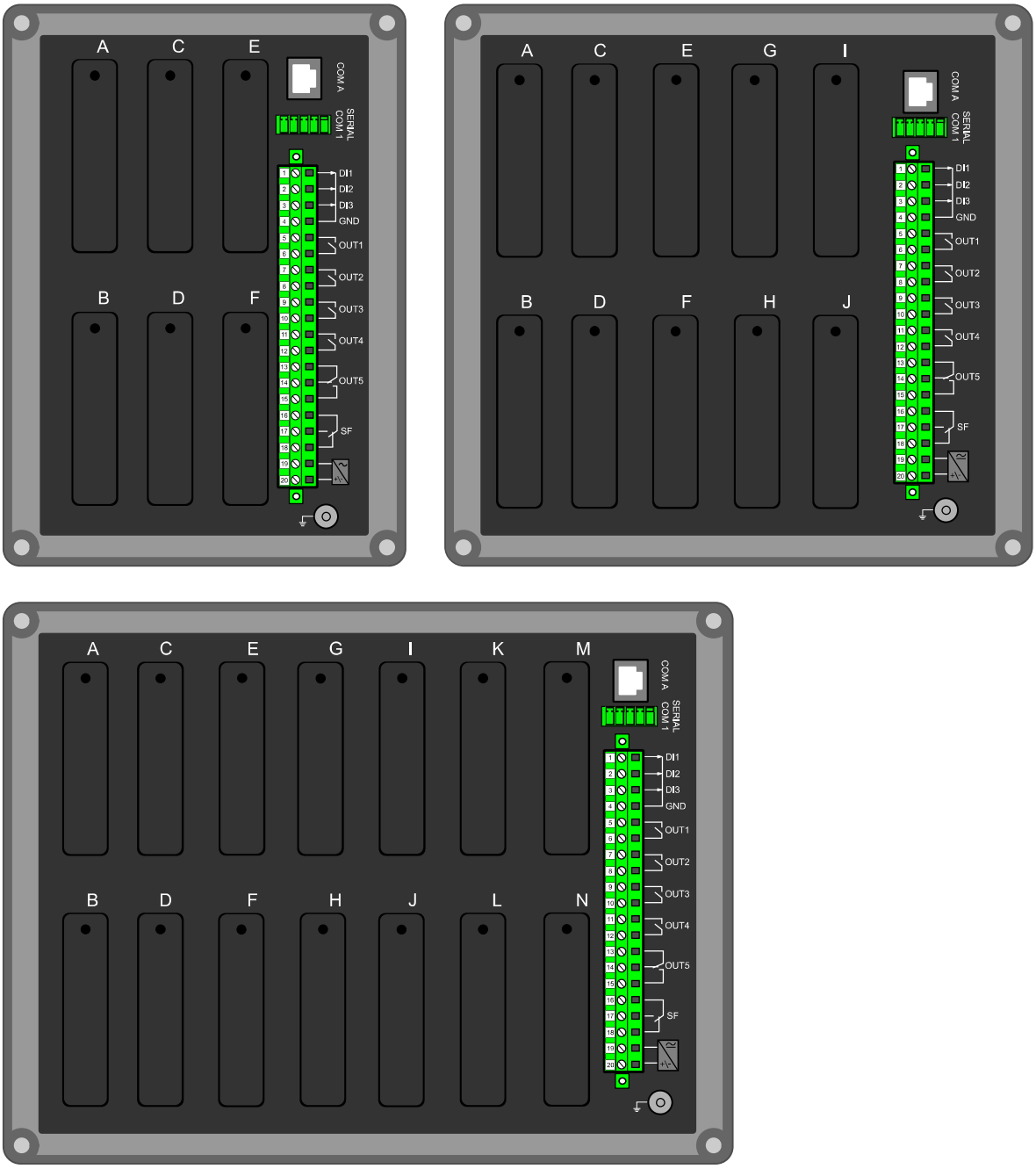

Voltage measurement cards and current measurement cards are available depending on the selected application package:

- No measurement (AQ-ONE-X4XXXXXX-XXXXXX)
- One CT module (AQ-ONE-X0XXXXXX-XXXXXX)
- One VT module (AQ-ONE-X1XXXXXX-XXXXXX)
- One CT module and one VT module (AQ-ONE-X5XXXXXX-XXXXXX)
- Two CT modules (AQ-ONE-X6XXXXXX-XXXXXX)
- Two CT modules and one VT module (AQ-ONE-X7XXXXXX-XXXXXX)

© Arcteq Relays Ltd

Figure. 6.1 - 299. AQ-ONE measurement options.

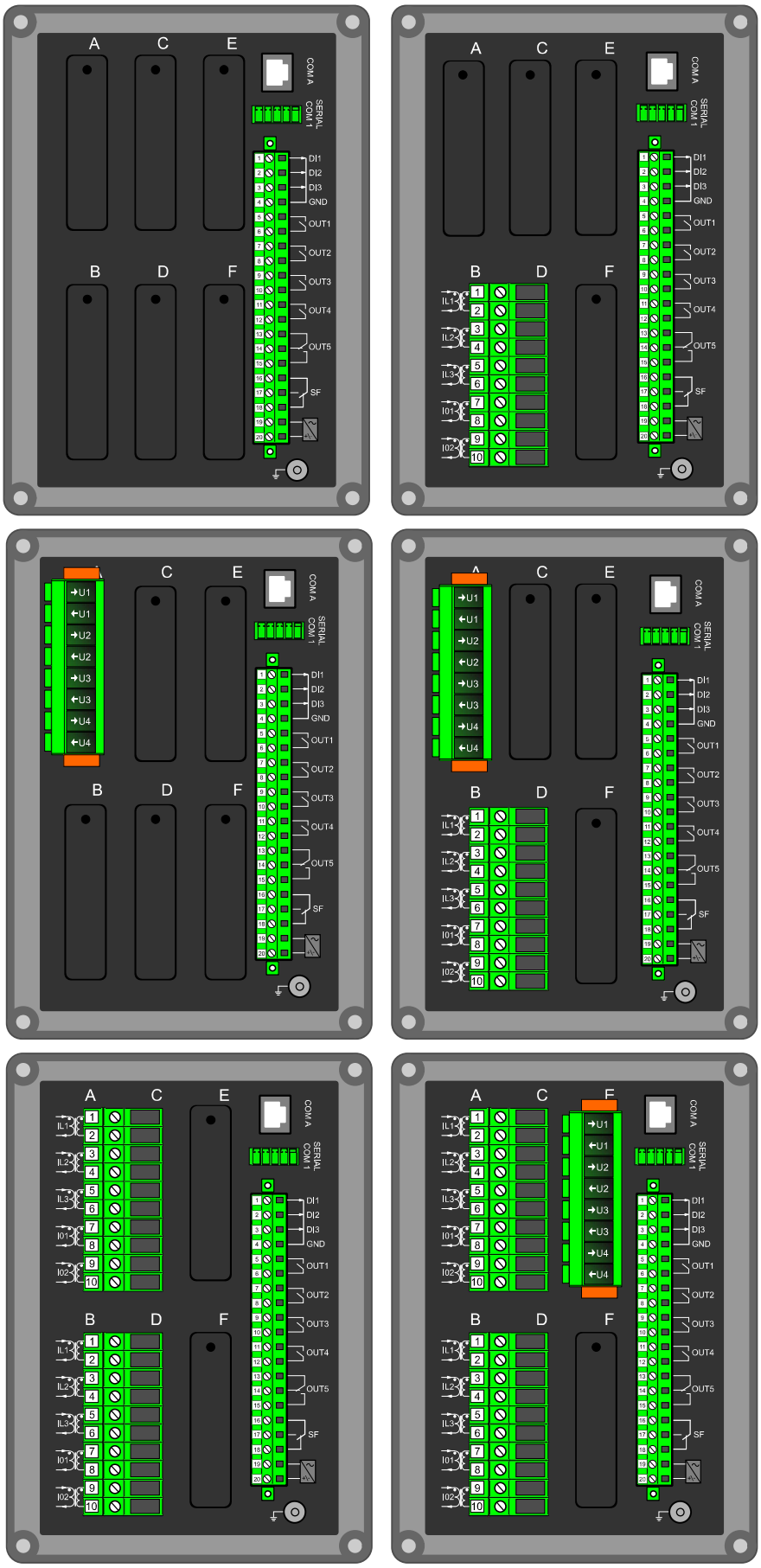

Figure. 6.1 - 300. AQ-ONE-L5PXXXXX-BBBBBCAAAAJ example hardware configuration.

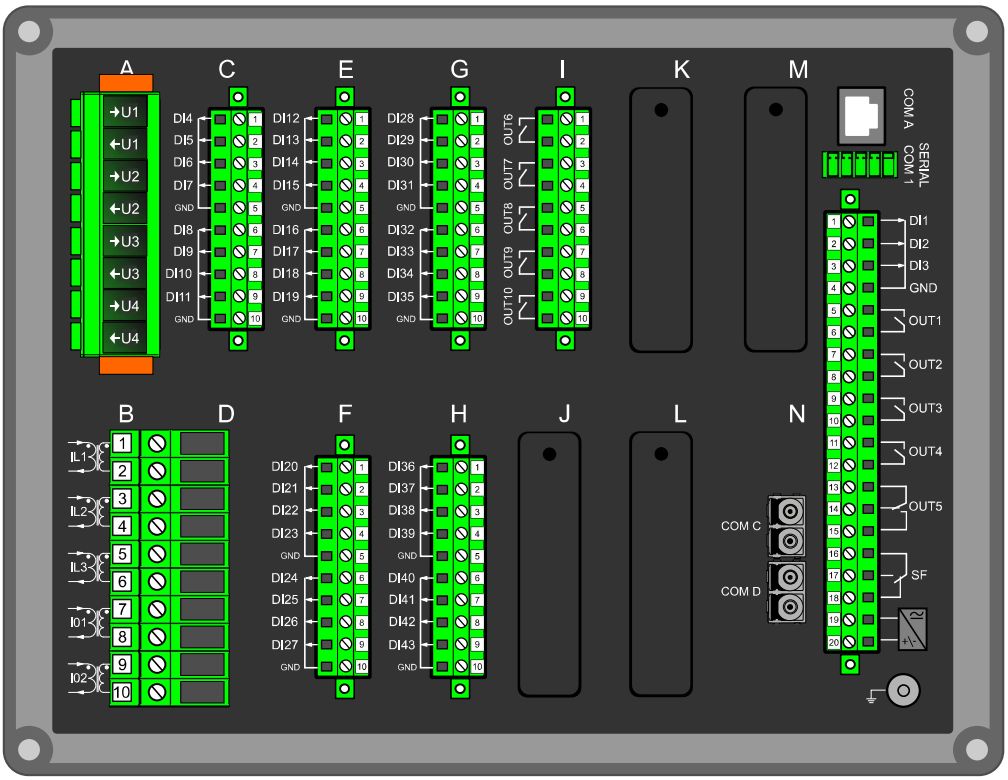

The modular design of the AQ-ONE relay enables scalable hardware configurations for a wide range of application requirements. All slots support any add-on module type, including digital I/O modules, integrated arc protection modules, and other special modules. The only slot-specific difference is that the last two slots also support communication modules, which affects overall device scalability.

In the example above, the device includes five digital input option cards, one digital output option card, four empty card slots, and one communication option card. A device with this configuration will have the order code AQ-ONE-L5PXXXXX-BBBBBCAAAAJ.

During start-up, the relay scans all installed modules based on their type designation code. If the detected module content does not match the expected configuration, the device reports a hardware configuration error. For field upgrades, add-on modules must be sourced from Arcteq Relays Ltd. or an authorized representative. They will provide the necessary module-specific unlocking code to ensure correct operation after hardware changes.

When an I/O module is installed, its physical slot position determines its I/O naming. The start-up scan order is: CPU module I/O, followed by slot A, slot B, slot C, and so on. The digital input channels DI1, DI2 and DI3, and the digital output channels OUT1 through OUT5, are always located in the CPU module. Any additional I/O modules receive channel names based on their slot order and module type.

© Arcteq Relays Ltd
IM00099

6.2 CPU module

Figure. 6.2 - 301. CPU module can be equipped with standard screw terminals or spring cage terminals for connection.

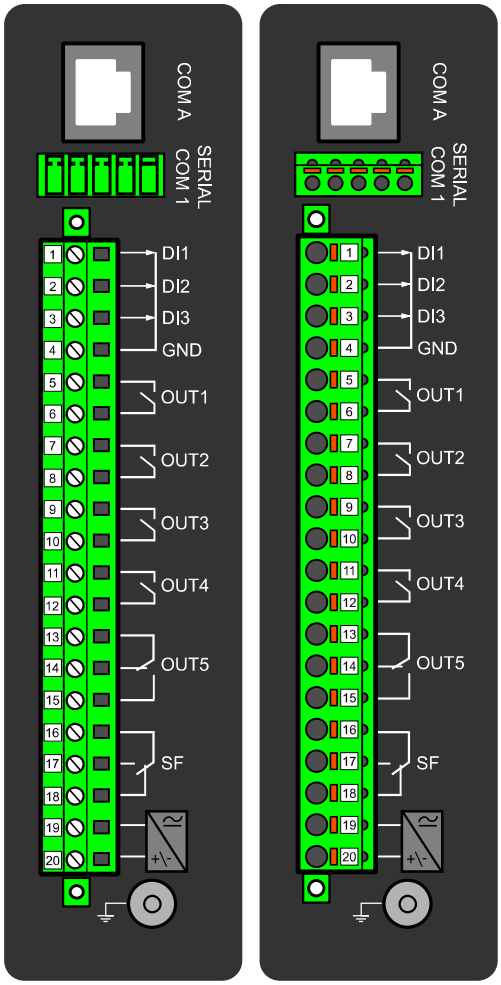

Connector	Description
COM A	Communication port A, or the RJ-45 port. Used for the setting tool connection and for SCADA communication.
COM B	Communication port B, or the RS-485 port. Used for SCADA communication. The pins have the following designations: • Pin 1 = DATA + • Pin 2 = DATA – • Pin 3 = GND • Pins 4 & 5 = Terminator resistor enabled by shorting.
X1-1	Digital input 1, nominal threshold voltage 24 V, 110 V or 220 V.
X1-2	Digital input 2, nominal threshold voltage 24 V, 110 V or 220 V.
X1-3	Digital input 3, nominal threshold voltage 24 V, 110 V or 220 V.
X1-4	Common GND for digital inputs 1, 2 and 3.
X1-5:6	Output relay 1, with a normally open (NO) contact.

Connector	Description
X1-7:8	Output relay 2, with a normally open (NO) contact.
X1-9:10	Output relay 3, with a normally open (NO) contact.
X1-11:12	Output relay 4, with a normally open (NO) contact.
X1-13:14:15	Signaling relay 5, with a changeover contact. Not to be used in trip coil control.
X1-16:17:18	System fault's signaling relay, with a changeover contact. Pins 16 and 17 are closed when the unit has a system fault or is powered OFF. Pins 16 and 18 are closed when the unit is powered ON and there is no system fault.
X1-19:20	Power supply IN. Either 88…265 VAC/DC (model A; order code "H") or 18…75 DC (model B; order code "L"). Positive side (+) to Pin 20.
GND	The device's earthing connector.

By default, the CPU module (combining the CPU, the I/O and the power supply) includes two standard communication ports and the device's basic digital I/O.

The digital output controls can be set by the user with software. Digital outputs are controlled in 5 ms program cycles. All output contacts are mechanical. The rated voltage of the NO/NC outputs is 250 VAC/DC.

Digital inputs

The current consumption of the digital inputs is 2 mA when activated. The range of the operating voltage is 24 V/110 V/220 V depending on the ordered hardware. All digital inputs are scannced in 5 ms program cycles.

The settings described in the table below can be found at *Control → Device I/O → Digital input settings* in the device settings.

Table. 6.2 - 673. Digital input settings.

Name	Range	Step	Default	Description
DIx Polarity	• NO (Normally open) • NC (Normally closed)	-	NO	Selects whether the status of the digital input is 1 or 0 when the input is energized.
DIx Activation delay	0.000…1800.000 s	0.001 s	0.000 s	Defines the delay for the status change from 0 to 1.
DIx Drop-off time	0.000…1800.000 s	0.001 s	0.000 s	Defines the delay for the status change from 1 to 0.
DIx AC mode	• Disabled • Enabled	-	Disabled	Selects whether or not a 30-ms deactivation delay is added to account for alternating current.

Digital outputs

The digital output controls can be set by the user with software. Digital outputs are controlled in 5 ms program cycles. All output contacts are mechanical. The rated voltage of the NO/NC outputs is 250 VAC/DC.

© Arcteq Relays Ltd

Table. 6.2 - 674. Digital output settings.

Name	Range	Description
Out x Polarity	• NO • NC	Determines the normal status of the output relay. Digital outputs are configured as “normally open” relays by default. Each output can be changed to “normally closed” using the "OUTx Polarity" parameter. Please note that this change is implemented in software only. If the device is powered off, the outputs will revert to an open state and return to the configured polarity once power is restored. If a truly “normally closed” contact is required, use the changeover relay OUT5 available in the CPU module of the device. An NC output signal does not open during a Communication or Protection reset.

Digital input and output descriptions

CPU card digital inputs and outputs can be given a description. The user defined description are displayed in most of the menus:

- logic editor
- matrix
- block settings
- event history
- disturbance recordings
- etc.

Table. 6.2 - 675. Digital input and output user description.

Name	Range	Default	Description
User editable description DIx	1...31 characters	DIx	Description of the digital input. This description is used in several menu types for easier identification.
User editable description OUTx		OUTx	Description of the digital output. This description is used in several menu types for easier identification.

NOTICE!
After editing user descriptions the event history will start to use the new description only after resetting the HMI. HMI can be reset from *General → Device info → HMI restart*.

Scanning cycle

All digital inputs are scanned in a 5 ms cycle, meaning that the state of an input is updated every 0…5 milliseconds. When an input is used internally in the device (either in setting group change or logic), it takes additional 0…5 milliseconds to operate. Theoretically, therefore, it takes 0…10 milliseconds to change the setting group when a digital input is used for group control or a similar function. In practice, however, the delay is between 2…8 milliseconds about 95 % of the time. When a digital input is connected directly to a digital output (OUT1…OUTx), it takes an additional 5 ms round. Therefore, when a digital input controls a digital output internally, it takes 0…15 milliseconds in theory and 2…13 milliseconds in practice.

NOTICE!
The mechanical delay of the relay is not included in these approximations!

6.3 Current measurement module

Figure. 6.3 - 302. Module connections with standard and ring lug terminals.

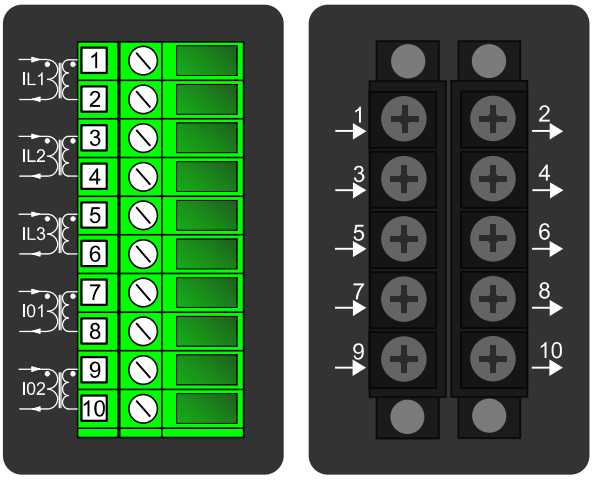

Connector	Description
CTM 1-2	Phase current measurement for phase L1 (A).
CTM 3-4	Phase current measurement for phase L2 (B).
CTM 5-6	Phase current measurement for phase L3 (C).
CTM 7-8	Coarse residual current measurement I01.
CTM 9-10	Fine residual current measurement I02.

A basic current measurement module with five channels includes three-phase current measurement inputs as well as coarse and fine residual current inputs. The CT module is available with either standard or ring lug connectors.

The current measurement module is connected to the secondary side of conventional current transformers (CTs). The nominal current for the phase current inputs is 5 A. The input nominal current can be scaled for secondary currents of 1…10 A. The secondary currents are calibrated to nominal currents of 1 A and 5 A, which provide ±0.5 % inaccuracy when the range is 0.005…4 × I_n.

The measurement ranges are as follows:

- Phase currents 25 mA…250 A (RMS)
- Coarse residual current 5 mA…150 A (RMS)
- Fine residual current 1 mA…75 A (RMS)

The characteristics of phase current inputs are as follows:

- The angle measurement inaccuracy is less than ± 0.2 degrees with nominal current.
- The frequency measurement range of the phase current inputs is 6…1800 Hz with standard hardware.
- The sample rate of the signal is 64 samples/cycle when the system frequency ranges from 6 Hz to 75 Hz.

For further details please refer to the "Current measurement" chapter in the “Technical data” section of this document.

© Arcteq Relays Ltd
IM00099

6.4 Voltage measurement module

Figure. 6.4 - 303. Voltage measurement module can be equipped with standard screw terminals or spring cage terminals for connection.

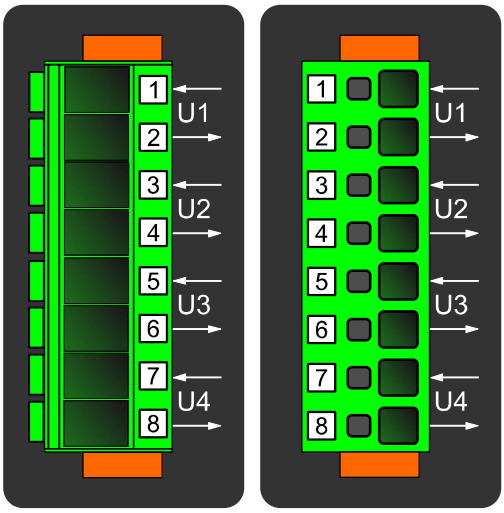

Connector	Description
VTM 1-2	Configurable voltage measurement input U1.
VTM 3-4	Configurable voltage measurement input U2.
VTM 5-6	Configurable voltage measurement input U3.
VTM 7-8	Configurable voltage measurement input U4.

A basic voltage measurement module with four channels includes four voltage measurement inputs that can be configured freely.

The voltage measurement module is connected to the secondary side of conventional voltage transformers (VTs) or directly to low-voltage systems secured by fuses. The nominal voltage can be set between 100…400 V. Voltages are calibrated in a range of 0…240 V, which provides ± 0.2 % inaccuracy in the same range.

The voltage input characteristics are as follows:

- The measurement range is 0.5…480.0 V per channel.
- The angle measurement inaccuracy is less than ± 0.5 degrees within the nominal range.
- The frequency measurement range of the voltage inputs is 6…1800 Hz with standard hardware.
- The sample rate of the signal is 64 samples/cycle when the system frequency ranges from 6 Hz to 75 Hz.

For further details please refer to the "Voltage measurement" chapter in the “Technical data” section of this document.

6.5 Option cards

6.5.1 Digital input module (optional)

Figure. 6.5.1 - 304. Digital input module (DI8) with eight add-on digital inputs. Can be equipped with standard screw terminals or spring cage terminals for connection.

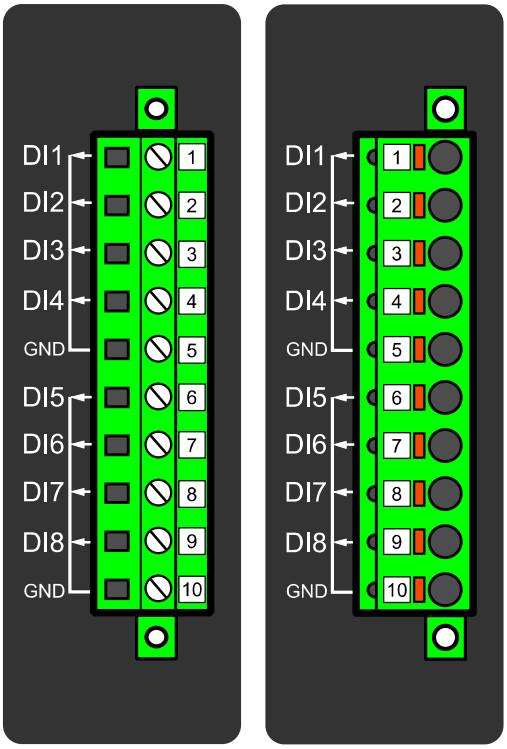

Connector	Description (x = the number of digital inputs in other modules that preceed this one in the configuration)
X 1	DIx + 1
X 2	DIx + 2
X 3	DIx + 3
X 4	DIx + 4
X 5	Common earthing for the first four digital inputs.
X 6	DIx + 5
X 7	DIx + 6
X 8	DIx + 7
X 9	DIx + 8
X 10	Common earthing for the other four digital inputs.

© Arcteq Relays Ltd
IM00099

The DI8 module is an add-on module with eight (8) galvanically isolated digital inputs. This module can be ordered directly to be installed into the device in the factory, or it can be upgraded in the field after the device's original installation when required. The properties of the inputs in this module are the same as those of the inputs in the main processor module. The current consumption of the digital inputs is 2 mA when activated, while the range of the operating voltage is from 0…265 VAC/DC. The activation and release thresholds are set in the software and the resolution is 1 V. All digital inputs are scannced in 5 ms program cycles, and their pick-up and release delays as well as their NO/NC selection can be set with software.

For the naming convention of the digital inputs provided by this module please refer to the chapter titled "Construction and installation".

For technical details please refer to the chapter titled "Digital input module" in the "Technical data" section of this document.

The hardware configuration code of this module is "B". For more information, please refer to the "Ordering information" chapter of this document.

Setting up the activation and release delays

The settings described in the table below can be found at *Control → Device I/O → Digital input settings* in the device settings.

Table. 6.5.1 - 676. Digital input settings of DI8 module.

Name	Range	Step	Default	Description
DIx Polarity	• NO (Normally open) • NC (Normally closed)	-	NO	Selects whether the status of the digital input is 1 or 0 when the input is energized.
DIx Activation threshold	16.0…200.0 V	0.1 V	88 V	Defines the activation threshold for the digital input. When "NO" is the selected polarity, the measured voltage exceeding this setting activates the input. When "NC" is the selected polarity, the measured voltage exceeding this setting deactivates the input.
DIx Release threshold	10.0…200.0 V	0.1 V	60V	Defines the release threshold for the digital input. When "NO" is the selected polarity, the measured voltage below this setting deactivates the input. When "NC" is the selected polarity, the measured voltage below this setting activates the input.
DIx Activation delay	0.000…1800.000 s	0.001 s	0.000 s	Defines the delay when the status changes from 0 to 1. Not visible when DI has been set to AC mode with "DIx AC mode" parameter.
DIx Drop-off time	0.000…1800.000 s	0.001 s	0.000 s	Defines the delay when the status changes from 1 to 0.
DIx AC Mode	• Disabled • Enabled	-	Disabled	Selects whether or not a 30-ms deactivation delay is added to take the alternating current into account. The "DIx Release threshold" parameter is hidden and forced to 10 % of the set "DIx Activation threshold" parameter.
DIx Counter	$0…2^{32}–1$	1	0	Displays the number of times the digital input has changed its status from 0 to 1.

Name	Range	Step	Default	Description
DIx Clear counter	• - • Clear	-	-	Resets the DIx counter value to zero.

The user can set the activation threshold individually for each digital input. When the activation and release thresholds have been set properly, they will result in the digital input states to be activated and released reliably. The selection of the normal state between normally open (NO) and normally closed (NC) defines whether or not the digital input is considered activated when the digital input channel is energized.

The diagram below depicts the digital input states when the input channels are energized and de-energized.

Figure. 6.5.1 - 305. Digital input state when energizing and de-energizing the digital input channels.

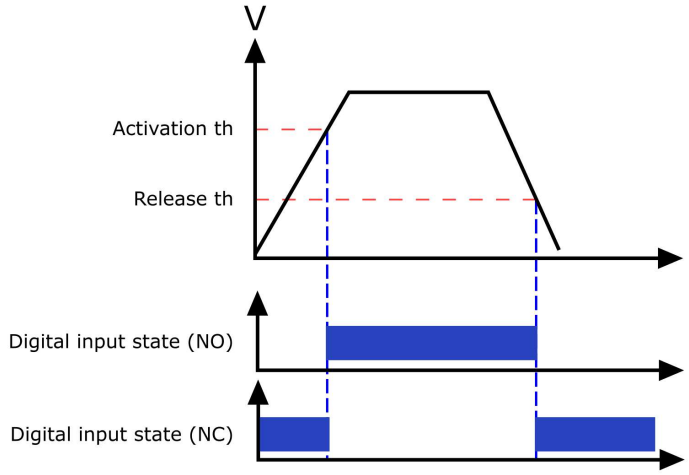

Digital input descriptions

Option card inputs can be given a description. The user defined description are displayed in most of the menus:

- logic editor
- matrix
- block settings
- event history
- disturbance recordings
- etc.

Table. 6.5.1 - 677. Digital input user description.

Name	Range	Default	Description
User editable description DIx	1...31 characters	DIx	Description of the digital input. This description is used in several menu types for easier identification.

NOTICE!
After editing user descriptions the event history will start to use the new description only after resetting the HMI. HMI can be reset from *General → Device info → HMI restart*.

© Arcteq Relays Ltd
IM00099

Digital input voltage measurements

Digital input option card channels measure voltage on each channel. The measured voltage can be seen at *Control → Device IO → Digital inputs → Digital input voltages*.

Table. 6.5.1 - 678. Digital input channel voltage measurement.

Name	Range	Step	Description
DIx Voltage now	0.000...275.000 V	0.001 V	Voltage measurement of a digital input channel.

6.5.2 Digital output module (optional)

Figure. 6.5.2 - 306. Digital output module (DO5) with five add-on digital outputs. Can be equipped with standard screw terminals or spring cage terminals for connection.

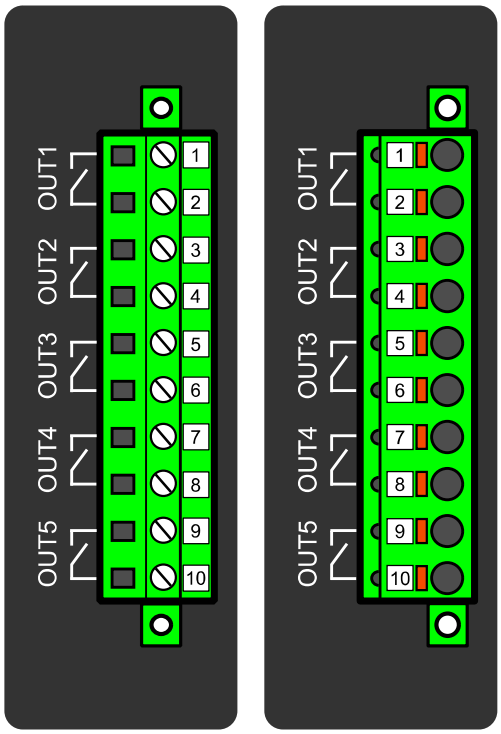

Connector	Description
X 1–2	OUTx + 1 (1st and 2nd pole NO)
X 3–4	OUTx + 2 (1st and 2nd pole NO)
X 5–6	OUTx + 3 (1st and 2nd pole NO)
X 7–8	OUTx + 4 (1st and 2nd pole NO)
X 9–10	OUTx + 5 (1st and 2nd pole NO)

The DO5 module is an add-on module with five (5) mechanical type digital outputs. This module can be ordered directly to be installed into the device in the factory, or it can be upgraded in the field after the device's original installation when required. The properties of the outputs in this module are the same as those of the outputs in the main processor module. Output control logic is user configurable. All digital outputs are controlled in 5 ms program cycles. The rated voltage of the outputs is 250 VAC/DC.

For the naming convention of the digital outputs provided by this module please refer to the chapter titled "Construction and installation".

For technical details please refer to the chapter titled "Digital output module" in the "Technical data" section of this document.

The hardware configuration code of this module is "C". For more information, please refer to the "Ordering information" chapter of this document.

Digital output settings

The parameters described in the table below can be found at *Control → Device I/O → Digital Outputs → Digital Output Settings* in the device settings.

Table. 6.5.2 - 679. Digital output user description.

Name	Range	Default	Description
OUTx Polarity	• NO • NC	NO	Digital outputs are configured as “normally open” relays by default. Each output can be changed to “normally closed” using the "OUTx Polarity" parameter. Please note that this change is implemented in software only. If the device is powered off, the outputs will revert to an open state and return to the configured polarity once power is restored. If a truly “normally closed” contact is required, use the changeover relay OUT5 available in the CPU module of the device.

Digital output descriptions

Option card outputs can be given a description. The user defined description are displayed in most of the menus:

- logic editor
- matrix
- block settings
- event history
- disturbance recordings
- etc.

The parameters described in the table below can be found at *Control → Device I/O → Digital Outputs → Digital Output Descriptions* in the device settings.

Table. 6.5.2 - 680. Digital output user description.

Name	Range	Default	Description
User editable description OUTx	1...31 characters	OUTx	Description of the digital output. This description is used in several menu types for easier identification.

© Arcteq Relays Ltd
IM00099

NOTICE!
After editing user descriptions the event history will start to use the new description only after resetting the HMI. HMI can be reset from *General → Device info → HMI restart*.

6.5.3 High-speed and high-current output module (optional)

Figure. 6.5.3 - 307. High-speed and high-current output module with three add-on high-speed outputs. Can be equipped with standard screw terminals or spring cage terminals for connection.

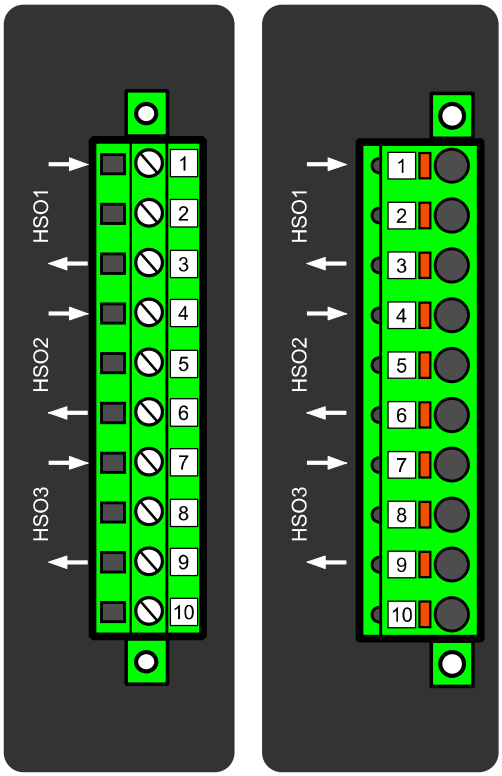

Connector	Description
X 1	HSOx + 1 in
X 2	N/A
X 3	HSOx + 1 out
X 4	HSOx + 2 in
X 5	N/A
X 6	HSOx + 2 out
X 7	HSOx + 3 in
X 8	N/A
X 9	HSOx + 3 out
X 10	N/A

The high-speed and high-current module is an add-on module with three (3) hybrid outputs consisting of a semiconductor and a relay connected in parallel. This module can be ordered directly to be installed into the device in the factory, or it can be upgraded in the field after the device's original installation when required. Output control logic is user configurable. All high-speed outputs are controlled in 1 ms program cycles.

For technical details please refer to the chapter titled "High-speed output module" in the "Technical data" section of this document.

The hardware configuration code of this module is "R". For more information, please refer to the "Ordering information" chapter of this document.

HSO Input Settings menu

The parameters described in the table below can be found at *Control → Device I/O → HSO Inputs→ HSO Input Settings* in the device settings.

Table. 6.5.3 - 681. HSO input parameters.

Name	Range	Step	Default	Description
HSO1…9 TCS Polarity	NC (Normally closed)	-	NC	The inputs on high-speed output cards are normally closed contacts, meaning they remain in the closed state under normal conditions and indicate '0' when the circuit is energized.
HSO1…9 TCS Drop-off time	0.000…1800.000 s	0.001 s	0.200 s	Defines the delay when the status changes from 0 to 1.
HSO1…9 TCS AC Mode	• Disabled • Enabled	-	Disabled	Selects whether or not a 30 ms deactivation delay is added to take the alternating current into account. The "DIx Release threshold" parameter is hidden and forced to 10 % of the set "DIx Activation threshold" parameter.
HSO1…9 TCS Counter	0…4294967295	1	0	Displays the number of times the input has changed its status from 0 to 1.
HSO1…9 TCS Clear counter	• - • Clear	-	-	Resets the input activation counter value to zero.

HSO Output Settings menu

The parameters described in the table below can be found at *Control → Device I/O → HSO Outputs → HSO Output Settings* in the device settings.

Table. 6.5.3 - 682. HSO output parameters.

Name	Range	Step	Default	Description
HSO1…9 Polarity	• NO • NC	-	NO	The inputs on high-speed output cards are normally closed contacts, meaning they remain in the closed state under normal conditions and indicate '0' when the circuit is energized.

© Arcteq Relays Ltd

HSO output and input descriptions

Option card outputs and inputs can be given a description. The user defined description are displayed in most of the menus:

- logic editor
- matrix
- block settings
- event history
- disturbance recordings
- etc.

Table. 6.5.3 - 683. HSO input and output user description.

Name	Range	Default	Description
User editable description HSOx	1...31 characters	HSOx	Description of the high-speed output. This description is used in several menu types for easier identification.
User editable description HSO1…9 TCS	1...31 characters	HSO1…9 TCS	Description of the high-speed output. This description is used in several menu types for easier identification.

NOTICE!
After editing user descriptions the event history will start to use the new description only after resetting the HMI. HMI can be reset from *General → Device info → HMI restart*.

6.5.4 Milliampere output module (4x mA out & 1x mA in) (optional)

Figure. 6.5.4 - 308. Milliampere output (mA) I/O module connections. Can be equipped with standard screw terminals or spring cage terminals for connection.

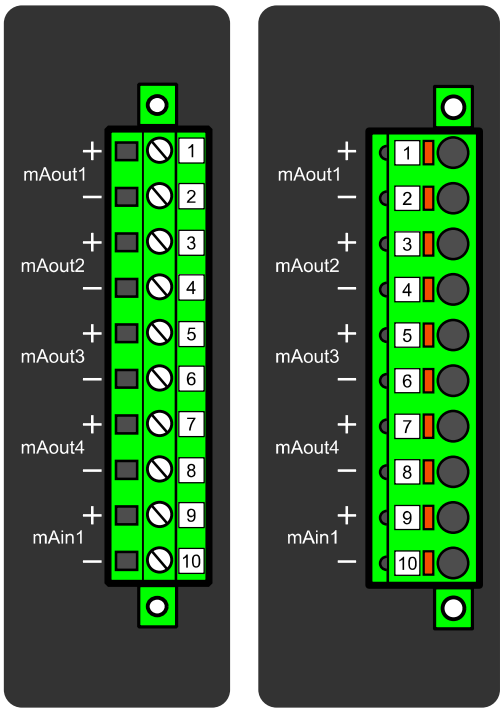

Connector	Description
Pin 1	mA OUT 1 + connector (0…24 mA)
Pin 2	mA OUT 1 – connector (0…24 mA)
Pin 3	mA OUT 2 + connector (0…24 mA)
Pin 4	mA OUT 2 – connector (0…24 mA)
Pin 5	mA OUT 3 + connector (0…24 mA)
Pin 6	mA OUT 3 – connector (0…24 mA)
Pin 7	mA OUT 4 + connector (0…24 mA)
Pin 8	mA OUT 4 – connector (0…24 mA)
Pin 9	mA IN 1 + connector (0…33 mA)
Pin 10	mA IN 1 – connector (0…33 mA)

The milliampere output (mA) I/O module is an add-on module with four (4) mA outputs and one (1) mA input. Both the outputs and the input are in two galvanically isolated groups, with one pin for the positive (+) connector and one pin for the negative (–) connector.

This module can be ordered directly to be installed into the device in the factory, or it can be upgraded in the field after the device's original installation when required.

The user sets the mA I/O with the mA outputs control function. This can be done at *Control → Device I/O → mA outputs* in the device configuration settings.

For further information please refer to the chapter titled "Milliampere output module (4 x mA out & 1 x mA in)" in the "Technical data" section of this manual.

The hardware configuration code of this module is "I". For more information, please refer to the "Ordering information" chapter of this document.

© Arcteq Relays Ltd

6.5.5 Milliampere input module (4x mA in & 1x mA out) (optional)

Figure. 6.5.5 - 309. Milliampere input (mA) I/O module connections. Can be equipped with standard screw terminals or spring cage terminals for connection.

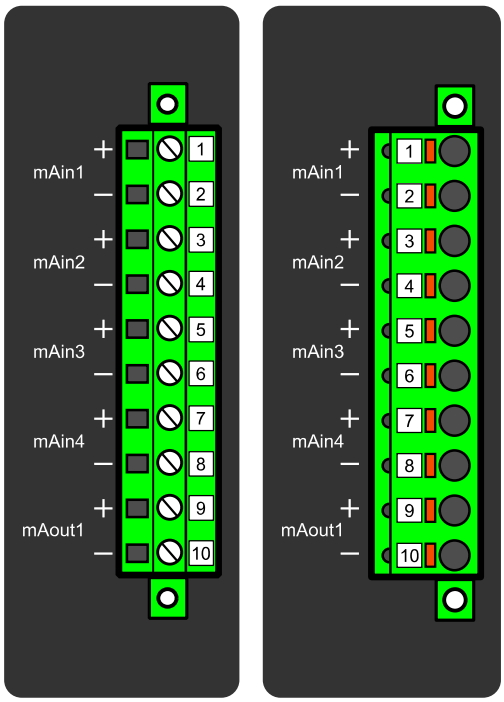

Connector	Description
Pin 1	mA IN 1 + connector (0…24 mA)
Pin 2	mA IN 1 – connector (0…24 mA)
Pin 3	mA IN 2 + connector (0…24 mA)
Pin 4	mA IN 2 – connector (0…24 mA)
Pin 5	mA IN 3 + connector (0…24 mA)
Pin 6	mA IN 3 – connector (0…24 mA)
Pin 7	mA IN 4 + connector (0…24 mA)
Pin 8	mA IN 4 – connector (0…24 mA)
Pin 9	mA OUT 1 + connector (0…33 mA)
Pin 10	mA OUT 1 – connector (0…33 mA)

The milliampere input (mA) I/O module is an add-on module with four (4) mA inputs and one (1) mA output. Both the inputs and the output are in two galvanically isolated groups, with one pin for the positive (+) connector and one pin for the negative (–) connector.

This module can be ordered directly to be installed into the device in the factory, or it can be upgraded in the field after the device's original installation when required.

The user sets the mA I/O with the mA output control function. This can be done at *Control → Device I/O → mA outputs* in the device configuration settings.

For further information please refer to the chapter titled "Milliampere input module (1x mA out & 4x mA in)" in the "Technical data" section of this manual.

The hardware configuration code of this module is "T". For more information, please refer to the "Ordering information" chapter of this document.

6.5.6 Point sensor arc protection module (optional)

Figure. 6.5.6 - 310. Arc protection module. Can be equipped with standard screw terminals or spring cage terminals for connection.

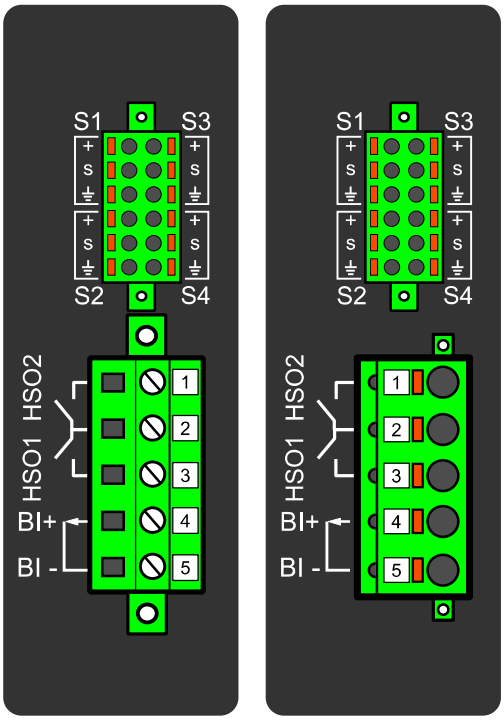

Table. 6.5.6 - 684. Module connections.

Connector	Description
S1	Light sensor channels 1…4 with positive ("+"), sensor ("S") and earth connectors.
S2	
S3	
S4	
X 1	HSO2 (+, NO)
X 2	Common battery positive terminal (+) for the HSOs.
X 3	HSO1 (+, NO)
X 4	Binary input 1 (+ pole)
X 5	Binary input 1 (– pole)

© Arcteq Relays Ltd

The arc protection module is an add-on module with four (4) light sensor channels, two (2) high-speed semiconductor outputs and one (1) binary input. This module can be ordered directly to be installed into the device in the factory, or it can be upgraded in the field after the device's original installation when required. Each channel can have up to three (3) light sensors serially connected to it.

High-speed outputs can used as signaling outputs. HSO1 and HSO2 can send overcurrent or light information to external AQ 100 or AQ-ONE devices.

The rated voltage of the binary input is 24 VDC. The pick-up threshold is ≥16 VDC. The binary input can be used for receiving external light signal or other signals related to arc protection applications. Please note that the binary input's delay is 5…10ms.



NOTICE!
BI1, HSO1 and HSO2 are not visible in the *Binary inputs* and *Binary outputs* menus (*Control → Device I/O*), they can only be programmed in the arc protection function matrix menu (*Protection → Arc protection → I/O → Direct output control* and *HSO control*).

For further information please refer to the chapter titled "Point sensor arc protection module" in the "Technical data" section of this manual.

The hardware configuration code of this module is "D". For more information, please refer to the "Ordering information" chapter of this document.

6.5.7 RTD input module (optional)

Figure. 6.5.7 - 311. RTD input module connectors.

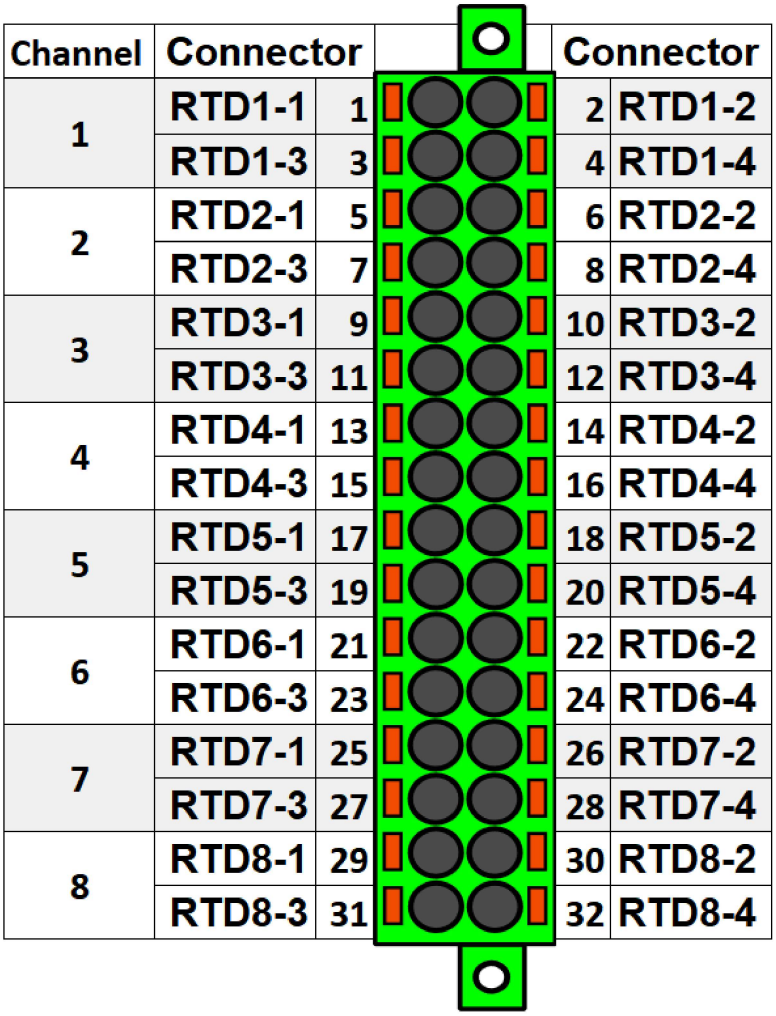

Channel	Connector			Connector
1	RTD1-1	1	2	RTD1-2
	RTD1-3	3	4	RTD1-4
2	RTD2-1	5	6	RTD2-2
	RTD2-3	7	8	RTD2-4
3	RTD3-1	9	10	RTD3-2
	RTD3-3	11	12	RTD3-4
4	RTD4-1	13	14	RTD4-2
	RTD4-3	15	16	RTD4-4
5	RTD5-1	17	18	RTD5-2
	RTD5-3	19	20	RTD5-4
6	RTD6-1	21	22	RTD6-2
	RTD6-3	23	24	RTD6-4
7	RTD7-1	25	26	RTD7-2
	RTD7-3	27	28	RTD7-4
8	RTD8-1	29	30	RTD8-2
	RTD8-3	31	32	RTD8-4

The RTD input module is an add-on module with eight (8) RTD input channels. Each input supports 2-wire, 3-wire and 4-wire RTD sensors. The sensor type can be selected with software for two groups, four channels each. The card supports Pt100 and Pt1000 sensors.

For further information please refer to the chapter titled "RTD input module" in the "Technical data" section of this manual.

The hardware configuration code of this module is "F". For more information, please refer to the "Ordering information" chapter of this document.

© Arcteq Relays Ltd
IM00099

Figure. 6.5.7 - 312. RTD sensor connection types.

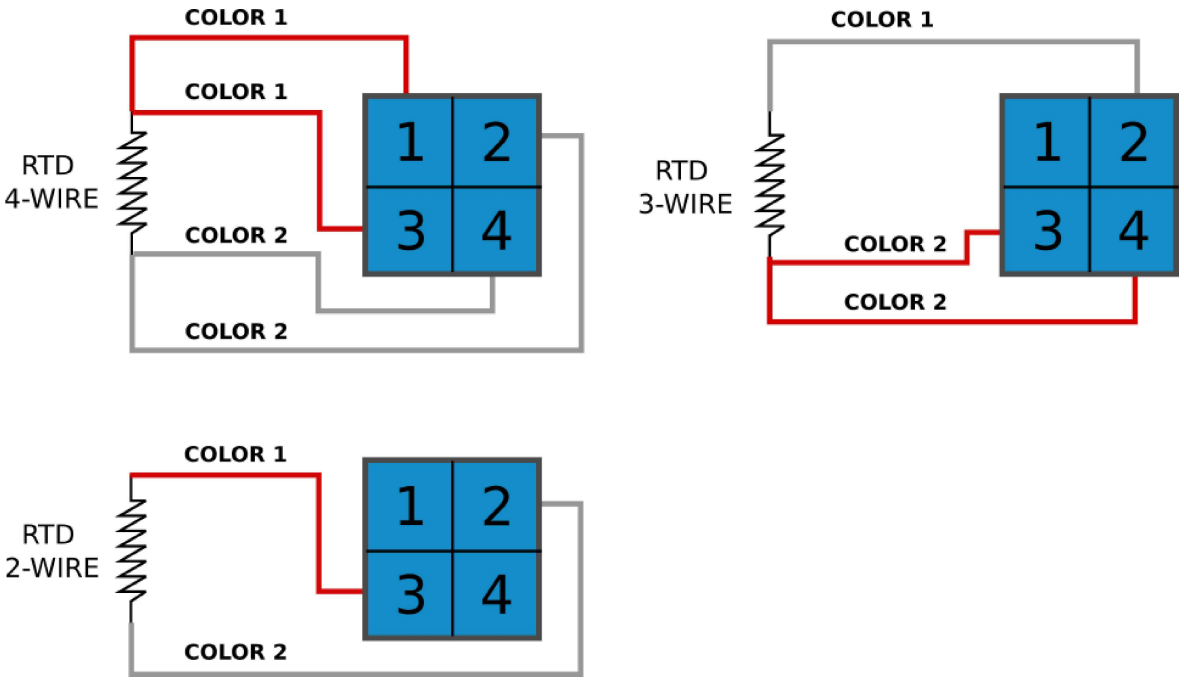

6.5.8 Double RJ45 Ethernet & IRIG-B communication module (optional)

Figure. 6.5.8 - 313. Double RJ-45 10/100 Mbps Ethernet communication module.

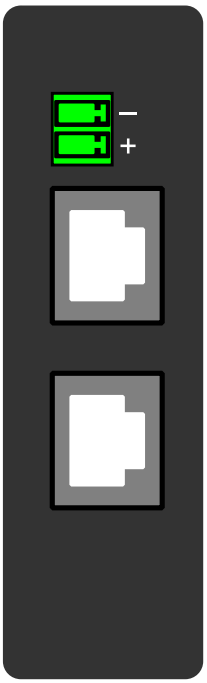

Connector	Description
Two-pin connector	• IRIG-B input
RJ-45 connectors	• Two Ethernet ports • RJ-45 connectors • 10BASE-T and 100BASE-TX

This option card supports daisy chain configurations.

For further information please refer to the chapter titled "Double RJ45 Ethernet & IRIG-B communication module" in the "Technical data" section of this manual.

The hardware configuration code of this module is "G". For more information, please refer to the "Ordering information" chapter of this document.

6.5.9 Double SFP Ethernet & IRIG-B communication module (optional)

Figure. 6.5.9 - 314. Double SFP 100 Mbps Ethernet communication module.

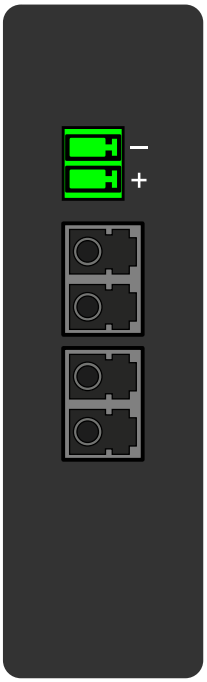

Connector	Description
Two-pin connector	• IRIG-B input
SFP slots	• Two SFP slots • Compatible SFP modules available as accessories

For further information please refer to the chapter titled "Double SFP Ethernet & IRIG-B communication module" in the "Technical data" section of this manual.

The hardware configuration code of this module is "Q". For more information, please refer to the "Ordering information" chapter of this document.

© Arcteq Relays Ltd

6.5.10 Double ST 100 Ethernet & IRIG-B communication module (optional)

Figure. 6.5.10 - 315. Double ST 100 Mbps Ethernet communication module connectors.

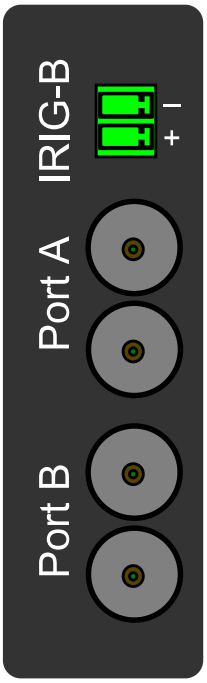

Connector	Description
Two-pin connector	• IRIG-B input
ST connectors	• Duplex ST connectors • 62.5/125 µm or 50/125 µm multimode fiber • Transmitter wavelength: 1260…1360 nm (nominal: 1310 nm) • Receiver wavelength: 1100…1600 nm • 100BASE-FX • Up to 2 km

This option cards supports redundant ring configuration and multidrop configurations. Please note that each ring can only contain AQ-ONE devices, and any third party devices must be connected to a separate ring.

For further information please refer to the chapter titled "Double ST Ethernet & IRIG-B communication module" in the "Technical data" section of this manual.

The hardware configuration code of this module is "H". For more information, please refer to the "Ordering information" chapter of this document.

Figure. 6.5.10 - 316. Example of a multidrop configuration.

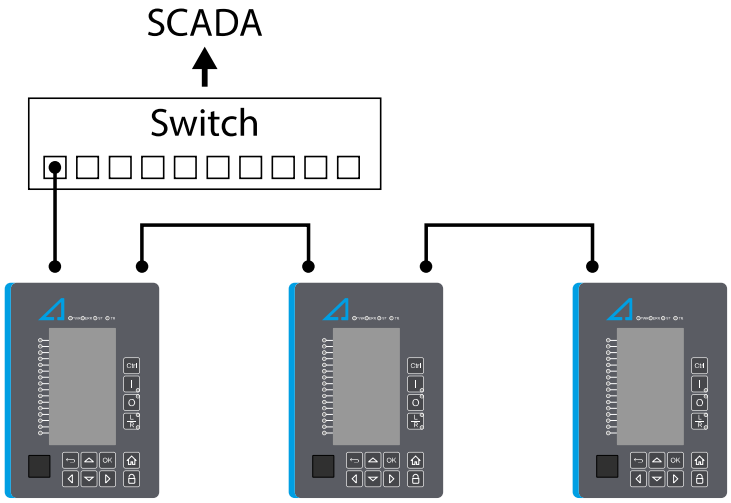

6.5.11 Double LC or RJ45 (HSR/PRP) Ethernet communication module (optional)

Figure. 6.5.11 - 317. LC and RJ45 100 Mbps Ethernet module connectors.

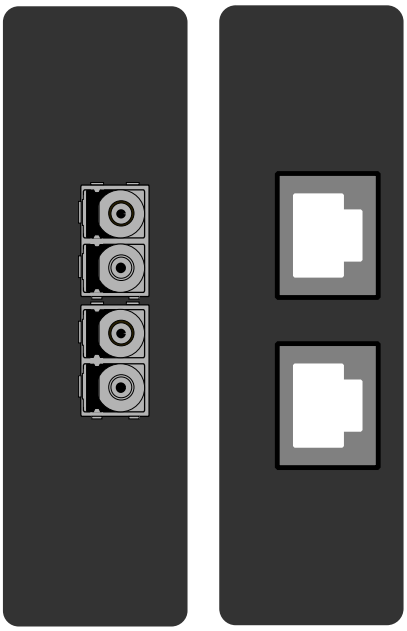

Card type	Description
LC ports	• Communication port D, 100 Mbps LC fiber connector. • 62.5/125 µm or 50/125 µm multimode (glass). • Wavelength 1300 nm. • HSR and PRP protocols supported.
RJ45	• RJ-45 connectors. • 10BASE-T and 100BASE-TX. • HSR and PRP protocols supported.

© Arcteq Relays Ltd

For further information please refer to the chapters titled "Double LC (HSR/PRP) Ethernet communication module" and "Double RJ45 (HSR/PRP) Ethernet communication module" in the "Technical data" section of this manual.

The hardware configuration codes of these modules are "J" (Double LC 100Mb Ethernet) and "K" (Double RJ45 100Mb Ethernet). For more information, please refer to the "Ordering information" chapter of this document.

6.5.12 Serial RS-232 communication module (optional)

Figure. 6.5.12 - 318. Serial RS-232 module connectors.

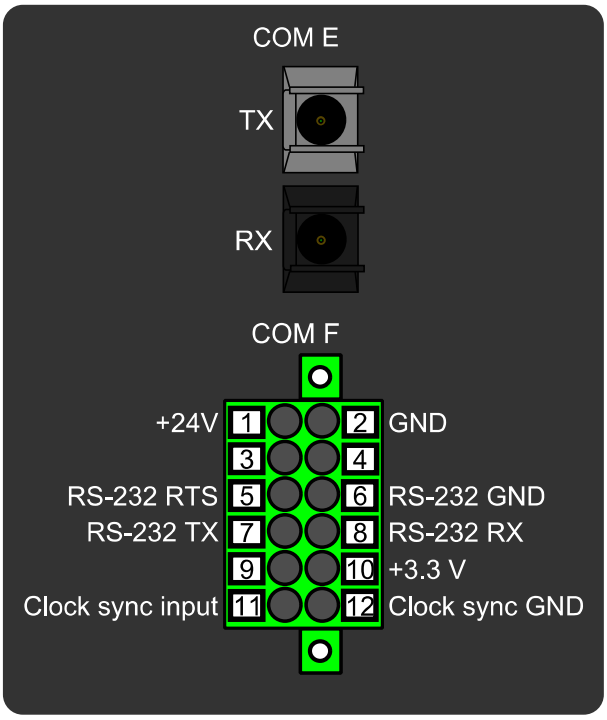

Table. 6.5.12 - 685. Module connections.

Connector	Pin	Name	Description
COM E	-	Serial fiber	• Serial-based communications • Port options: ◦ Glass/glass ◦ Plastic/plastic ◦ Glass/plastic ◦ Plastic/glass • Wavelength 660 nm • Compatible with 50/125 µm, 62.5/125 µm, 100/140 µm, and 200 µm Plastic-Clad Silica (PCS) fiber • Compatible with ST connectors
COM F	1	+24 V input	Optional external auxiliary voltage for serial fiber.
	2	GND	
	3	-	Not in use.
	4		

Connector	Pin	Name	Description
	5	RS-232 RTS	Serial based communications.
	6	RS-232 GND	
	7	RS-232 TX	
	8	RS-232 RX	
	9	-	Not in use.
	10	+3.3 V output (spare)	Spare power source for external equipment (45 mA).
	11	Clock sync input	Clock synchronization input (supports IRIG-B).
	12	Clock sync GND	

The option card includes two serial communication interfaces: COM E is a serial fiber interface with glass/glass, plastic/plastic, glass/plastic and plastic/glass options, COM F is an RS-232 interface.

For further information please refer to the chapter titled "RS-232 & serial fiber communication module" in the "Technical data" section of this manual.

The hardware configuration codes of these modules are "L", "M", "N" and "O". For more information, please refer to the "Ordering information" chapter of this document.

© Arcteq Relays Ltd

6.6 Dimensions and installation

Figure. 6.6 - 319. Device installation.

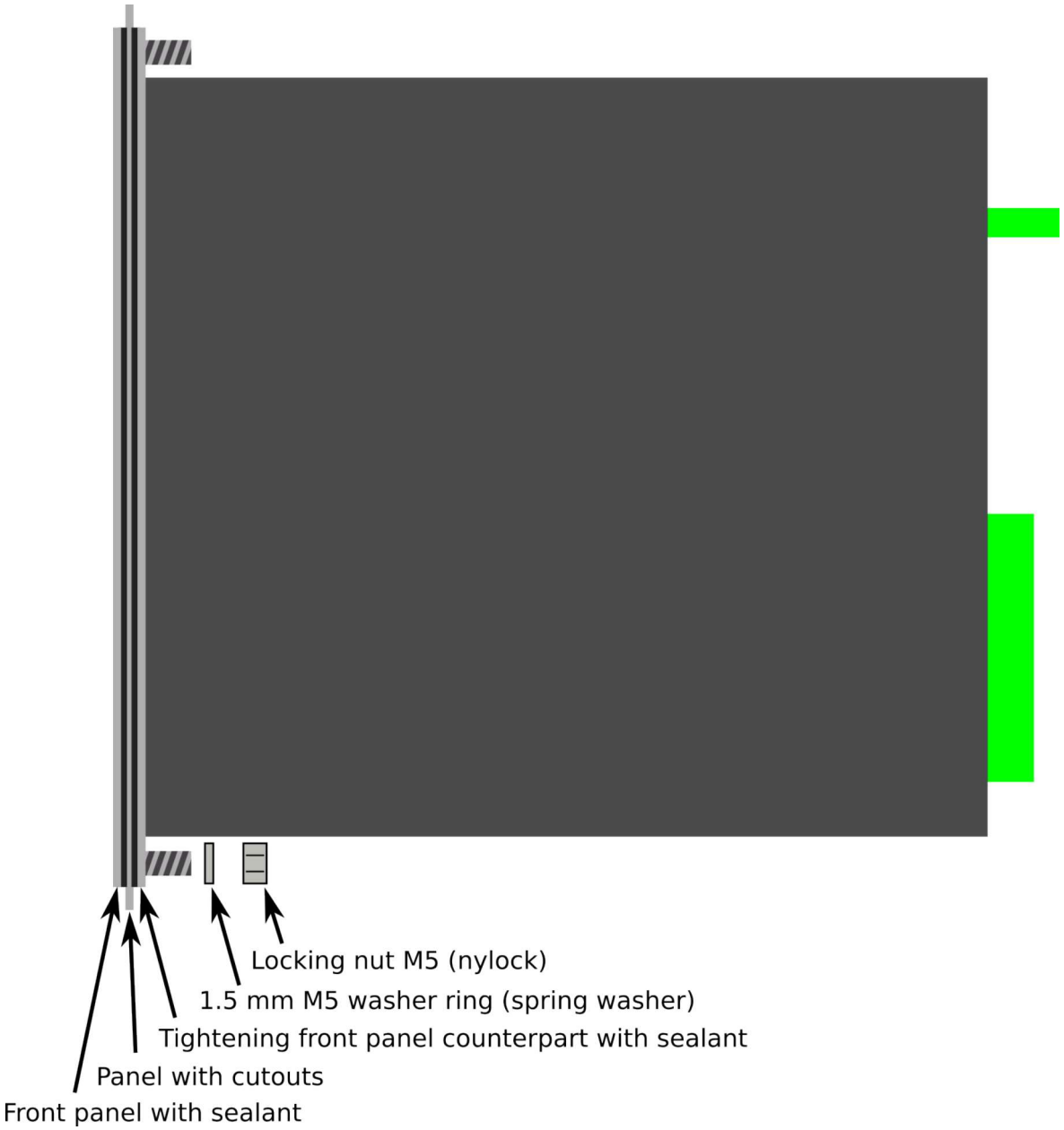

AQ-ONE small version dimensions

Figure. 6.6 - 320. Device dimensions.

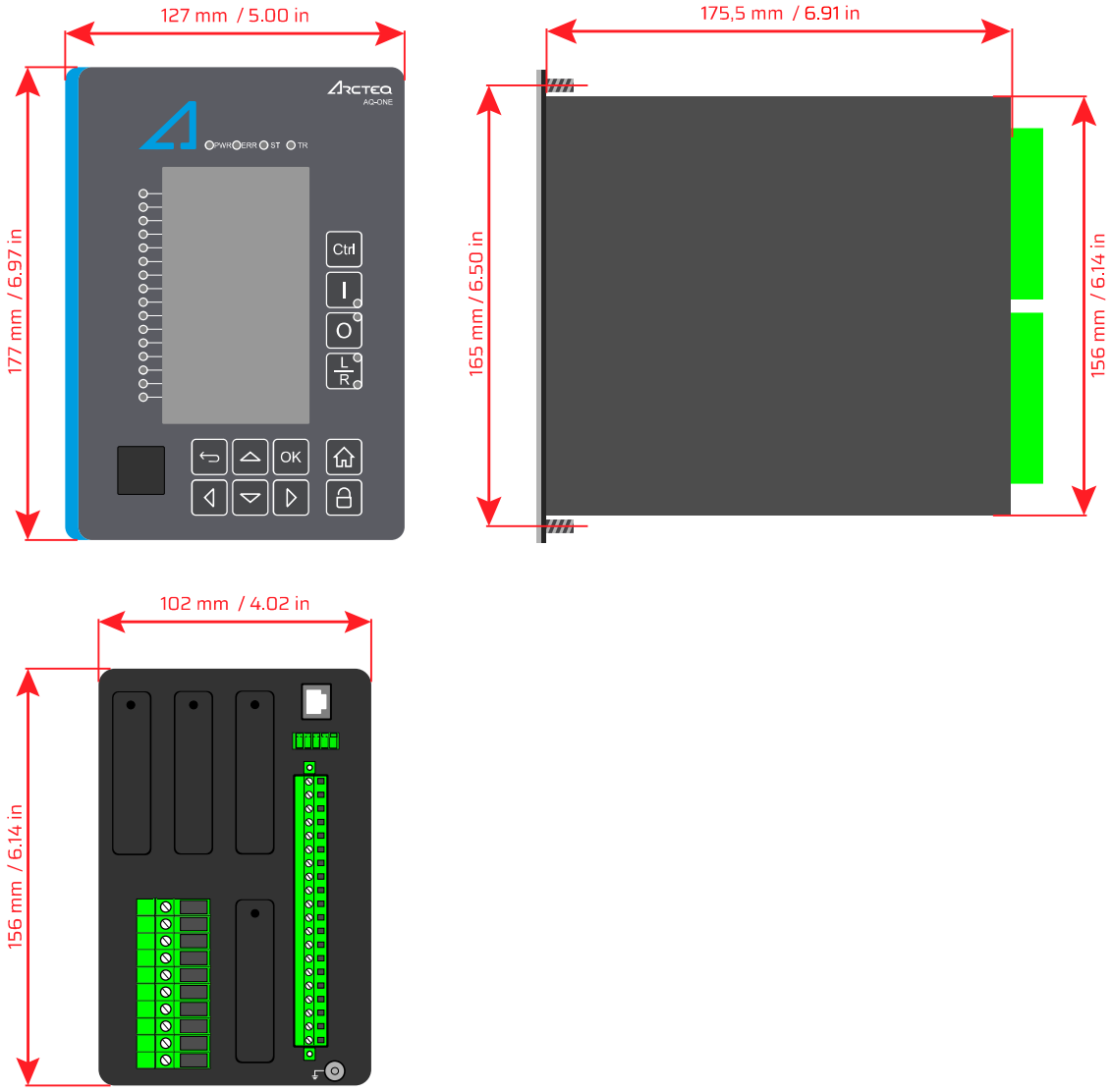

© Arcteq Relays Ltd

Figure. 6.6 - 321. Panel cut-out and spacing of the device.

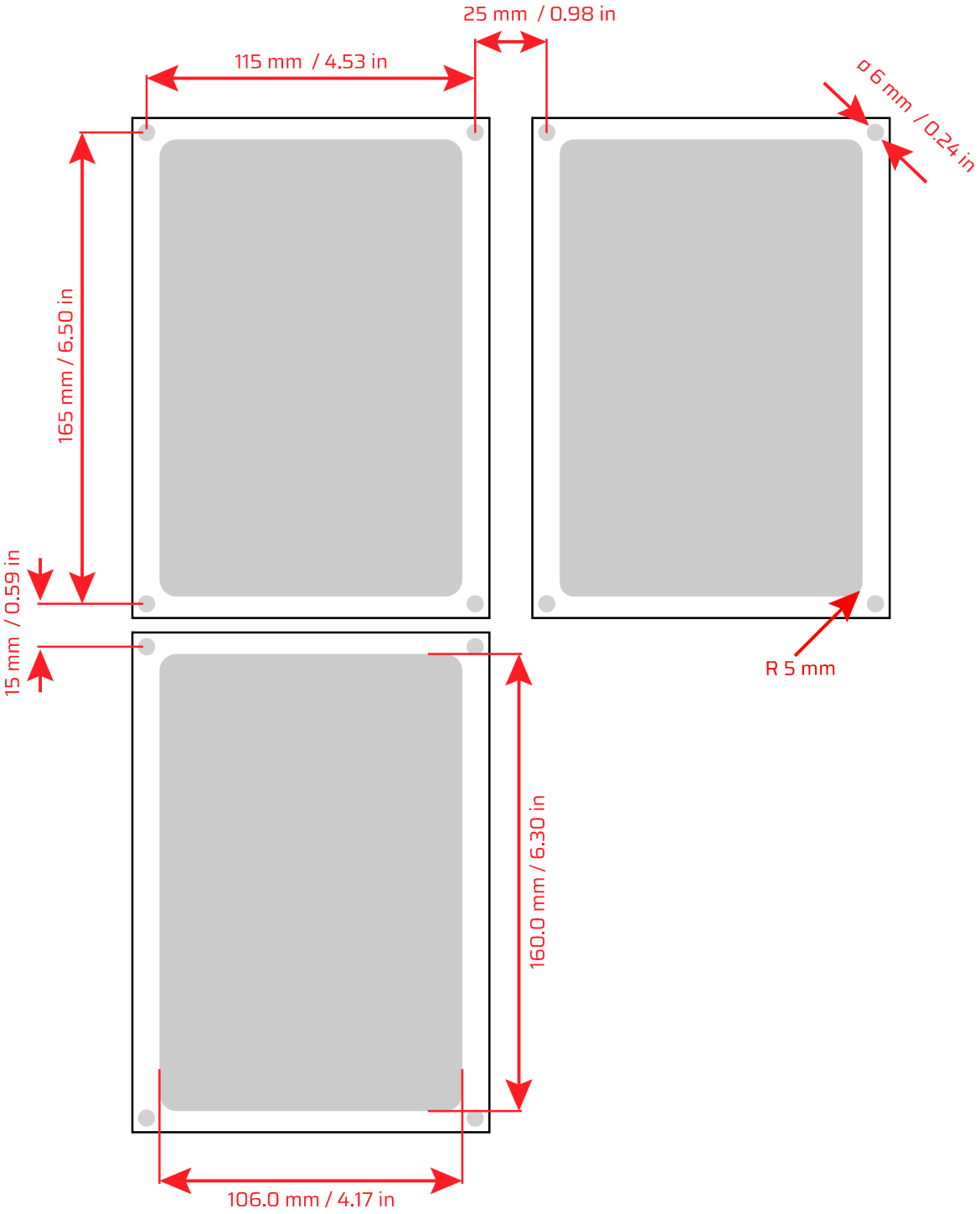

AQ-ONE medium version dimensions

Figure. 6.6 - 322. Device dimensions.

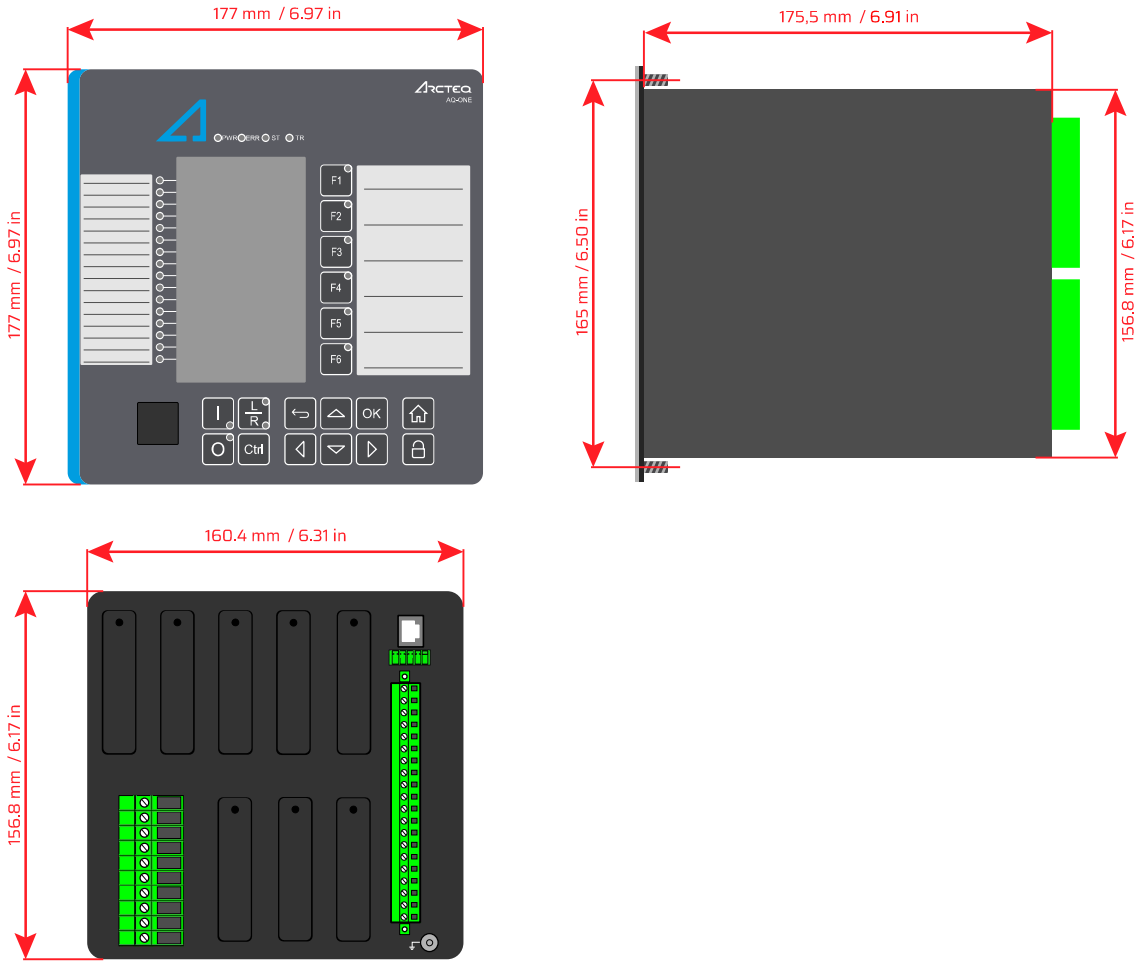

© Arcteq Relays Ltd

Figure. 6.6 - 323. Panel cut-out and spacing of the device.

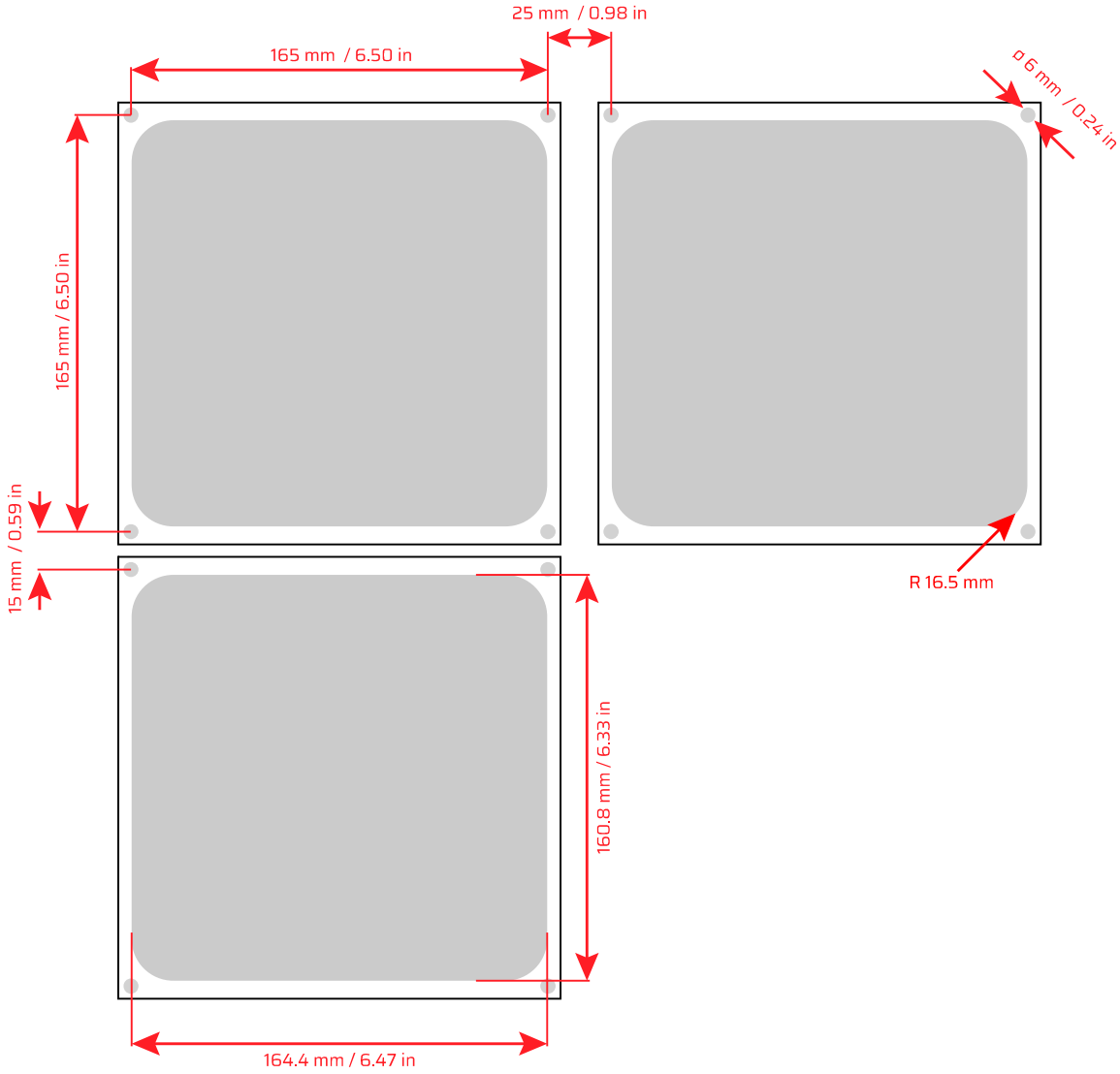

AQ-ONE large version dimensions

Figure. 6.6 - 324. Device dimensions.

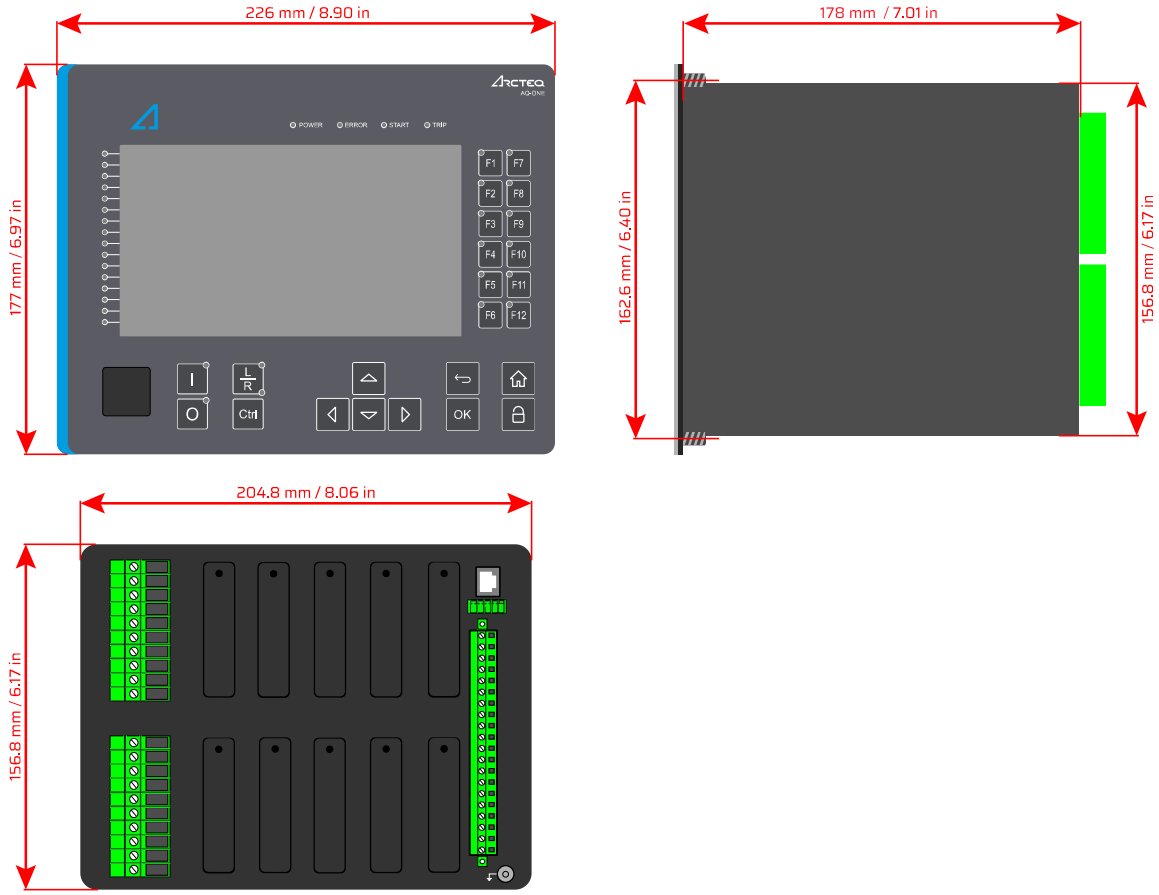

© Arcteq Relays Ltd

Figure. 6.6 - 325. Panel cut-out and spacing of the device.

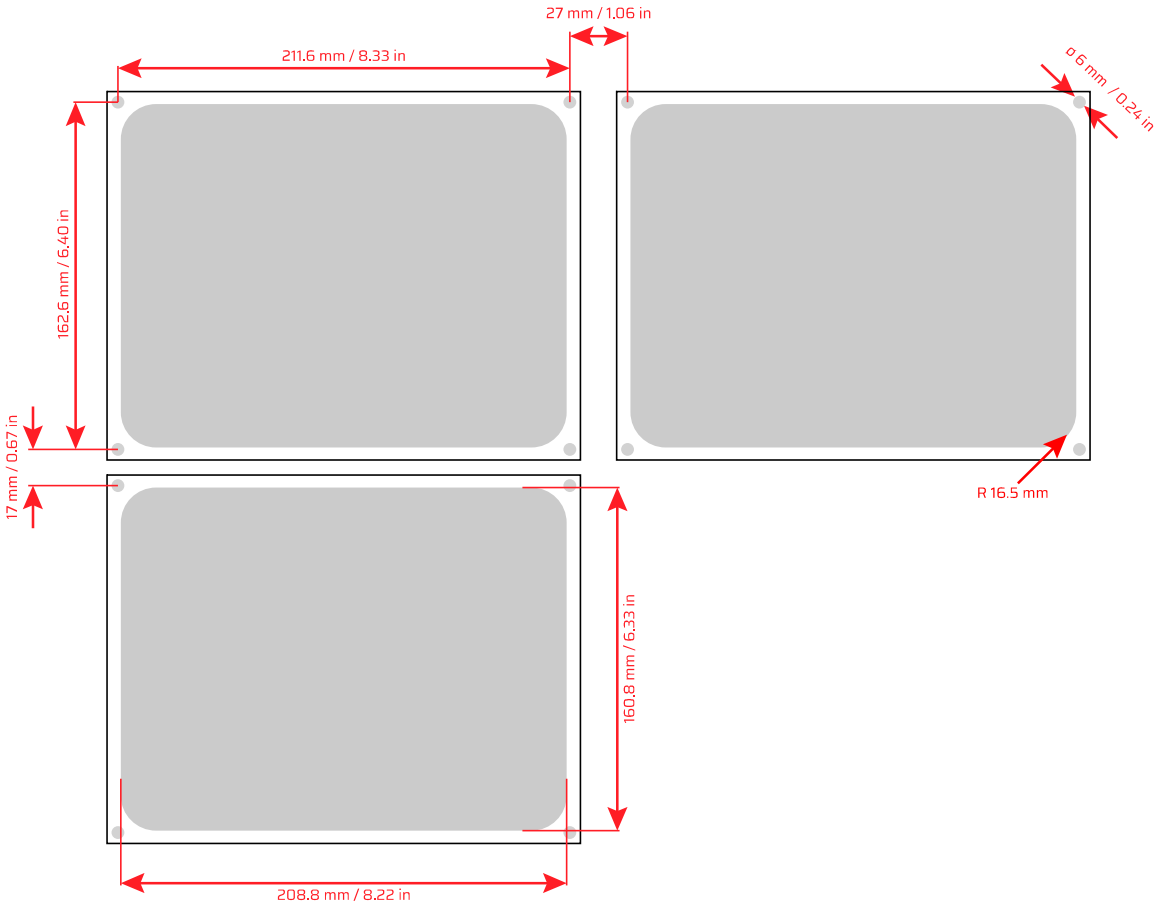

7 Technical data

7.1 Hardware

7.1.1 Measurements

7.1.1.1 Current measurement

Table. 7.1.1.1 - 686. Technical data for the current measurement module.

General information	
Spare part code	#SP-2XX-CM
Compatibility	AQ 210 series AQ 250 series AQ-ONE
Connections	
Measurement channels/CT inputs	Three phase current inputs: IL1 (A), IL2 (B), IL3 (C) Two residual current inputs: Coarse residual current input I01, Fine residual current input I02
Phase current inputs (A, B, C)	
Sample rate	64 samples per cycle in frequency range 6...75Hz
Rated current I_N	5 A (configurable 0.2…10 A)
Thermal withstand	20 A (continuous) 100 A (for 10 s) 500 A (for 1 s) 1250 A (for 0.01 s)
Frequency measurement range	From 6…75Hz fundamental, up to the 31st harmonic current
Current measurement range	5 mA…250 A (RMS)
Current measurement inaccuracy	0.005…4.000 × I_N < ±0.5 % or < ±15 mA 4…20 × I_N < ±0.5 % 20…50 × I_N < ±1.0 %
Angle measurement inaccuracy	< ±0.2° (I> 0.1 A) < ±1.0° (I≤ 0.1 A)
Burden (50/60 Hz)	<0.1 VA
Transient overreach	<8 %
Coarse residual current input (I01)	
Rated current I_N	1 A (configurable 0.1…10 A)

© Arcteq Relays Ltd
IM00099

Thermal withstand	25 A (continuous) 100 A (for 10 s) 500 A (for 1 s) 1250 A (for 0.01 s)
Frequency measurement range	From 6…75 Hz fundamental, up to the 31st harmonic current
Current measurement range	5 mA…150 A (RMS)
Current measurement inaccuracy	0.002…10.000 × I_N < ±0.5 % or < ±3 mA 10…150 × I_N < ±0.5 %
Angle measurement inaccuracy	< ±0.2° (I> 0.05 A) < ±1.0° (I≤ 0.05 A)
Burden (50/60Hz)	<0.1 VA
Transient overreach	<5 %
Fine residual current input (I02)	
Rated current I_N	0.2 A (configurable 0.001…10 A)
Thermal withstand	25 A (continuous) 100 A (for 10 s) 500 A (for 1 s) 1250 A (for 0.01 s)
Frequency measurement range	From 6…75 Hz fundamental, up to the 31st harmonic current
Current measurement range	1 mA…75 A (RMS)
Current measurement inaccuracy	0.002…25.000 × I_N < ±0.5 % or < ±0.6 mA 25…375 × I_N < ±1.0 %
Angle measurement inaccuracy	< ±0.2° (I> 0.01 A) < ±1.0° (I≤ 0.01 A)
Burden (50/60Hz)	<0.1 VA
Transient overreach	<5 %
Screw connection terminal block (standard)	
Nominal cross section (solid or stranded wire)	4 mm^2
Ring lug terminal block connection (option)	
Ring terminal dimensions	Max 8mm diameter, with minimum 3,5mm screw hole

NOTICE!
Current measurement accuracy has been verified with 50/60 Hz.

The amplitude difference is 0.2 % and the angle difference is 0.5 degrees higher at 16.67 Hz and other frequencies.

7.1.1.2 Voltage measurement

Table. 7.1.1.2 - 687. Technical data for the voltage measurement module.

General information	
Spare part code	#SP-2XX-VT
Compatibility	AQ 210 series AQ 250 series AQ-ONE
Connection	
Measurement channels/VT inputs	4 independent VT inputs (U1, U2, U3 and U4)
Measurement	
Sample rate	64 samples per cycle in frequency range 6...75Hz
Voltage measuring range	0.50…480.00 V (RMS)
Rated voltage U_N	100 V / 110 V / 115 V / 120 V (RMS)
Voltage measurement inaccuracy	1…2 V ±1.5 % 2…10 V ±0.5 % 10…480 V ±0.35 %
Angle measurement inaccuracy	±0.2 degrees (15…300 V) ±1.5 degrees (1…15 V)
Voltage measurement bandwidth (freq.)	7…75 Hz fundamental, up to the 31st harmonic voltage
Terminal block connection	
Nominal cross section (solid or stranded wire)	6 mm^2
Input impedance	~24.5 MΩ
Burden (50/60 Hz)	<0.02 VA
Thermal withstand	630 V_{RMS} (continuous)

NOTICE!
Voltage measurement accuracy has been verified with 50/60 Hz.

The amplitude difference is 0.2 % and the angle difference is 0.5 degrees higher at 16.67 Hz and other frequencies.

7.1.1.3 Voltage memory

Table. 7.1.1.3 - 688. Technical data for the voltage memory function.

Measurement inputs

© Arcteq Relays Ltd

Voltage inputs	U_{L1}, U_{L2}, U_{L3} U_{L12}, U_{L23}, U_{L31} + U_0
Current inputs (back-up frequency)	Phase current inputs: I_{L1} (A), I_{L2} (B), I_{L3} (C)
Pick-up	
Pick-up voltage setting Pick-up current setting (optional)	2.00…50.00 %U_N, setting step 0.01 x %U_N 0.01…50.00 × I_N, setting step 0.01 × I_N
Inaccuracy: - Voltage - Current	 ±1.5 %U_{SET} or ±30 mV ±0.5 %I_{SET} or ±15 mA (0.10…4.0 × I_{SET})
Operation time	
Angle memory activation delay	<20 ms (typically 5 ms)
Maximum active time	0.020…50.000 s, setting step 0.005 s
Inaccuracy: - Definite time (U_M/U_{SET} ratio >1.05)	 ±1.0 % or ±35 ms
Angle memory	
Angle drift while voltage is absent	±1.0° per 1 second
Reset	
Reset ratio: - Voltage memory (voltage) - Voltage memory (current)	 103 % of the pick-up voltage setting 97 % of the pick-up current setting
Reset time	<50 ms

NOTICE!
Voltage memory is activated only when all line voltages fall below set pick-up value.

NOTICE!
Voltage memory activation captures healthy situation voltage angles, one cycle before actual activation (50Hz/20ms before “bolted” fault)

7.1.1.4 Power and energy measurement

Table. 7.1.1.4 - 689. Power and energy measurement accuracy

Power measurement P, Q, S	Frequency range 6…75 Hz
Inaccuracy	0.3 % <1.2 × I_N or 3 VA secondary 1.0 % >1.2 × I_N or 3 VA secondary
Energy measurement	**Frequency range 6…75 Hz**
Energy and power metering inaccuracy	0.5% down to 1A RMS (50/60Hz) as standard 0.2% down to 1A RMS (50/60Hz) option available (see the order code for details)

7.1.1.5 Frequency measurement

Table. 7.1.1.5 - 690. Frequency measurement accuracy.

Frequency measurement performance	
Frequency measuring range	6…75 Hz fundamental, up to the 31st harmonic current or voltage
Inaccuracy	10 mHz

7.1.2 CPU & Power supply

Table. 7.1.2 - 691. General information for the CPU module.

General information	
Spare part code	#SP-250-CPU
Compatibility	AQ 210 series AQ 250 series AQ-ONE
Terminal block connection	
Solid or stranded wire Nominal cross section	2.5 mm^2
RS-485 serial terminal block connection	
Maximum cross section (solid or stranded wire)	1.5 mm^2

7.1.2.1 Auxiliary voltage

Table. 7.1.2.1 - 692. Power supply model A

Rated values	
Rated auxiliary voltage	80…265 V (AC/DC)
Power consumption	< 20 W (no option cards) < 40 W (maximum number of option cards)
Maximum permitted interrupt time	< 40 ms with 110 VDC
DC ripple	< 15 %
Other	
Minimum recommended fuse rating	MCB C2

Table. 7.1.2.1 - 693. Power supply model B

Rated values

© Arcteq Relays Ltd

Rated auxiliary voltage	18…72 VDC
Power consumption	< 20 W (no option cards) < 40 W (maximum number of option cards)
Maximum permitted interrupt time	< 40 ms with 24 VDC
DC ripple	< 15 %
Other	
Minimum recommended fuse rating	MCB C2

7.1.2.2 CPU communication ports

Table. 7.1.2.2 - 694. Front panel local communication port.

Port	
Port media	Copper Ethernet RJ-45
Number of ports	1
Port protocols	PC-protocols FTP
Features	
Data transfer rate	100 MB/s
System integration	Can't be used for system protocols, only for local programming

Table. 7.1.2.2 - 695. Rear panel system communication port A.

Port	
Port media	Copper Ethernet RJ-45
Number of ports	1
Features	
Port protocols	IEC 61850 (1st edition) IEC61850 (2nd edition) IEC 104 Modbus/TCP DNP3 FTP
Data transfer rate	100 MB/s
System integration	Can be used for system protocols and for local programming

Table. 7.1.2.2 - 696. Rear panel system communication port B.

Port

Port media	Copper RS-485
Number of ports	1
Features	
Port protocols	Modbus/RTU IEC 103 IEC 101 DNP3 SPA
Data transfer rate	65 580 kB/s
System integration	Can be used for system protocols

7.1.2.3 CPU digital inputs

Table. 7.1.2.3 - 697. CPU model-isolated digital inputs, with thresholds defined by order code.

Rated values	
Rated auxiliary voltage	265 V (AC/DC)
Nominal voltage	Order code defined: 24, 110, 220 V (AC/DC)
Pick-up threshold Release threshold	Order code defined: 19, 90,170 V Order code defined: 14, 65, 132 V
Scanning rate	5 ms
Settings	
Pick-up delay	Software settable: 0…1800 s
Polarity	Software settable: Normally On/Normally Off
Current drain	2 mA

7.1.2.4 CPU digital outputs

Table. 7.1.2.4 - 698. Digital outputs (Normally Open)

Rated values	
Rated auxiliary voltage	265 V (AC/DC)
Continuous carry	5 A
Make and carry 0.5 s Make and carry 3 s	30 A 15 A
Breaking capacity, DC (L/R = 40 ms) at 48 VDC at 110 VDC at 220 VDC	 1 A 0.4 A 0.2 A

© Arcteq Relays Ltd

Control rate	5 ms
Settings	
Polarity	Software settable: Normally Open / Normally Closed

Table. 7.1.2.4 - 699. Digital outputs (Change-Over)

Rated values	
Rated auxiliary voltage	265 V (AC/DC)
Continuous carry	2.5 A
Make and carry 0.5 s Make and carry 3 s	30 A 15 A
Breaking capacity, DC (L/R = 40 ms) at 48 VDC at 110 VDC at 220 VDC	 1 A 0.3 A 0.15 A
Control rate	5 ms
Settings	
Polarity	Software settable: Normally Open / Normally Closed

CAUTION!
Please note, that signaling relay 5 and system fault's signaling relay are designed only for signaling purposes, and are not to be used in trip coil control.

7.1.3 Option cards

7.1.3.1 Digital input module

Table. 7.1.3.1 - 700. Technical data for the digital input module.

General information	
Hardware configuration code	B
Spare part code	#SP-250-DI8
Compatibility	AQ 210 series models AQ 250 series models AQ-ONE
Rated values	
Rated auxiliary voltage	5…265 V (AC/DC)
Current drain	2 mA
Scanning rate Activation/release delay	5 ms 5...11 ms

Settings	
Pick-up threshold Release threshold	Software settable: 16…200 V, setting step 1 V Software settable: 10…200 V, setting step 1 V
Pick-up delay	Software settable: 0…1800 s
Drop-off delay	Software settable: 0…1800 s
Polarity	Software settable: Normally On/Normally Off
Terminal block connection	
Solid or stranded wire Nominal cross section	2.5 mm^2

7.1.3.2 Digital output module

Table. 7.1.3.2 - 701. Technical data for the digital output module.

General information	
Hardware configuration code	C
Spare part code	#SP-250-DO5
Compatibility	AQ 210 series models AQ 250 series models AQ-ONE
Rated values	
Rated auxiliary voltage	265 V (AC/DC)
Continuous carry	5 A
Make and carry 0.5 s Make and carry 3 s	30 A 15 A
Breaking capacity, DC (L/R = 40 ms) at 48 VDC at 110 VDC at 220 VDC	 1 A 0.4 A 0.2 A
Control rate	5 ms
Settings	
Polarity	Software settable: Normally On/Normally Off
Terminal block connection	
Maximum cross section (solid or stranded wire)	2.5 mm^2

© Arcteq Relays Ltd
IM00099

7.1.3.3 High-speed and high-current output module

Table. 7.1.3.3 - 702. Technical data for the high-speed and high-current output module.

General information	
Hardware configuration code	R
Spare part code	#SP-250-HSO
Compatibility	AQ 250 series models AQ-ONE
High-speed output rated values	
Rated auxiliary voltage	265 V (AC/DC)
Continuous carry	10 A
Make and carry 0.5 s Make and carry 3 s	30 A 15 A
Breaking capacity, DC (L/R = 40 ms) at 48 VDC at 110 VDC at 220 VDC	 10 A
Control rate	1 ms
Operating time	Typically under 4 ms
Trip Circuit Supervision input rated values	
Rated auxiliary voltage	265 V (AC/DC)
Nominal voltage	Order code defined: 24, 110, 220 V (AC/DC)
Pick-up threshold	Order code defined: 19, 90, 170 V
Release threshold	Order code defined: 14, 65, 132 V
Scanning rate	5 ms
High-speed output settings	
Polarity	Software settable: Normally On/Normally Off
Trip Circuit Supervision input settings	
Release delay	Software settable: 0.000…1800.000 s
Polarity	Normally Closed
Current drain	2 mA
Terminal block connection	
Maximum cross section (solid or stranded wire)	2.5 mm^2

7.1.3.4 Milliampere output module (4 x mA out & 1 x mA in)

Table. 7.1.3.4 - 703. Technical data for the milliampere output module.

General information	
Hardware configuration code	I
Spare part code	#SP-2XX-MA
Compatibility	AQ 210 series models AQ 250 series models AQ-ONE
Signals	
Output magnitudes Input magnitudes	4 × mA output signal (DC) 1 × mA input signal (DC)
mA input	
Range (hardware) Range (measurement) Inaccuracy	0...33 mA 0...24 mA ±0.1 mA
Update cycle Response time at 5 ms cycle Update cycle time inaccuracy	5...10 000 ms, setting step 5 ms ~ 15 ms (13...18 ms) Max. +20 ms above the set cycle
mA input scaling range Output scaling range	0...4000 mA -1 000 000.0000…1 000 000.0000, setting step 0.0001
mA output	
Inaccuracy at 0...24 mA	±0.01 mA
Response time at 5 ms cycle [fixed]	< 5 ms
mA output scaling range Source signal scaling range	0...24 mA, setting step 0.001 mA -1 000 000.000…1 000 000.0000, setting step 0.0001
Terminal block connection	
Maximum cross section (solid or stranded wire)	2.5 mm^2

7.1.3.5 Milliampere input module (1x mA out & 4x mA in)

Table. 7.1.3.5 - 704. Technical data for the milliampere input module.

General information	
Hardware configuration code	T
Spare part code	#SP-250-MAIN
Compatibility	AQ 250 series models AQ-ONE

© Arcteq Relays Ltd

Signals	
Input magnitudes Output magnitudes	4 × mA input signal (DC) 1 × mA output signal (DC)
mA input	
Range (hardware) Range (measurement) Inaccuracy	0...33 mA 0...24 mA ±0.1 mA
Update cycle Response time at 5 ms cycle Update cycle time inaccuracy	5...10 000 ms, setting step 5 ms ~ 15 ms (13...18 ms) Max. +20 ms above the set cycle
mA input scaling range Output scaling range	0...4000 mA -1 000 000.0000…1 000 000.0000, setting step 0.0001
mA output	
Inaccuracy at 0...24 mA	±0.01 mA
Response time at 5 ms cycle [fixed]	< 5 ms
mA output scaling range Source signal scaling range	0...24 mA, setting step 0.001 mA -1 000 000.000…1 000 000.0000, setting step 0.0001
Terminal block connection	
Maximum cross section (solid or stranded wire)	2.5 mm^2

7.1.3.6 Point sensor arc protection module

Table. 7.1.3.6 - 705. Technical data for the point sensor arc protection module.

General information	
Hardware configuration code	D
Spare part code	#SP-2XX-ARC
Compatibility	AQ 210 series models AQ 250 series models AQ-ONE
Connections	
Input arc point sensor channels	S1, S2, S3, S4 (pressure and light, or light only)
Sensors per channel	3
Maximum cable length	200 m
Performance	
Pick-up light intensity	8, 25 or 50 kLx (the sensor is selectable in the order code)
Point sensor detection radius	180 degrees

Start and instant operating time (light only)	Typically <5 ms with dedicated semiconductor outputs (HSO) Typically <10 ms regular output relays

Table. 7.1.3.6 - 706. High-Speed Outputs (HSO1…2)

Rated values	
Rated auxiliary voltage	250 VDC
Continuous carry	2 A
Make and carry 0.5 s Make and carry 3 s	15 A 6 A
Breaking capacity, DC (L/R = 40 ms)	1 A/110 W
Control rate	5 ms
Operation delay	<1 ms
Polarity	Normally Off
Contact material	Semiconductor

Table. 7.1.3.6 - 707. Binary input channel

Rated values	
Voltage withstand	265 VDC
Nominal voltage Pick-up threshold Release threshold	24 VDC ≥16 VDC ≤15 VDC
Scanning rate	5 ms
Polarity	Normally Off
Current drain	3 mA

Table. 7.1.3.6 - 708. Terminal block connections

Arc point sensor terminal block connections	
Maximum cross section (Solid or stranded wire)	1.5 mm^2
Binary input and HSO terminal block connections	
Maximum cross section (solid or stranded wire)	2.5 mm^2

NOTICE!
The polarity must be correct!

© Arcteq Relays Ltd

7.1.3.7 RTD input module

Table. 7.1.3.7 - 709. Technical data for the RTD input module.

General information	
Hardware configuration code	F
Spare part code	#SP-2xx-RTD
Compatibility	AQ 210 series models AQ 250 series models AQ-ONE
Channels 1-8	
2/3/4-wire RTD	
Pt100 or Pt1000	
Terminal block connection	
Maximum cross section (solid or stranded wire)	1.5 mm^2

7.1.3.8 Double RJ-45 Ethernet & IRIG-B communication module

Table. 7.1.3.8 - 710. Technical data for the double RJ-45 Ethernet communication module.

General information	
Hardware configuration code	G
Spare part code	#SP-2XX-ETH-RJ45
Compatibility	AQ 210 series models AQ 250 series models AQ-ONE
Ethernet connector features	
Protocols	IEC 61850 IEC 104 Modbus/TCP DNP3 FTP
Data transfer rate	100 MB/s
System integration	Can be used for system protocols and for local programming
Number of ports	2
Communication ports	Copper Ethernet RJ-45
IRIG-B Connector	
Maximum cross section (solid or stranded wire)	1.5 mm^2

7.1.3.9 Double SFP Ethernet & IRIG-B communication module

Table. 7.1.3.9 - 711. Technical data for the double SFP Ethernet communication module.

General information	
Hardware configuration code	Q
Spare part code	#SP-250-ETH-SFP
Compatibility	AQ 250 series models AQ-ONE
Ethernet connector features	
Protocols	IEC 61850 IEC 104 Modbus/TCP DNP3 FTP
Data transfer rate	100 MB/s
System integration	Can be used for system protocols and for local programming
Number of ports	2
Communication ports	SFP
IRIG-B Connector	
Maximum cross section (solid or stranded wire)	1.5 mm^2

7.1.3.10 Double ST Ethernet & IRIG-B communication module

Table. 7.1.3.10 - 712. Technical data for the double ST 100 Mbps Ethernet communication module.

General information	
Order code	H
Spare part code	#SP-2XX-2XST
Compatibility	AQ 210 series models AQ 250 series models AQ-ONE
Protocols	
Protocols	IEC61850 DNP/TCP Modbus/TCP IEC104 FTP
ST connectors	

© Arcteq Relays Ltd

Connector type	Duplex ST connectors 62.5/125 µm or 50/125 µm multimode fiber 100BASE-FX
Number of connectors	2
Transmitter wavelength	1260…1360 nm (nominal: 1310 nm)
Receiver wavelength	1100…1600 nm
Maximum distance	2 km
Data transfer rate	100 MB/s
IRIG-B Connector	
Maximum cross section (solid or stranded wire)	1.5 mm^2

7.1.3.11 Double LC (HSR/PRP) Ethernet communication module

Table. 7.1.3.11 - 713. Technical data for the double LC 100 Mbps Ethernet communication module.

General information	
Hardware configuration code	J
Spare part code	#SP-2XX-2LC(HSR/PRP)
Compatibility	AQ 210 series models AQ 250 series models AQ-ONE
Protocols	
Protocols	IEC 61850 IEC 104 Modbus/TCP DNP3 FTP
Redundancy	HSR and PRP
Data transfer rate	100 MB/s
System integration	Can be used for system protocols and for local programming
Ports	
Number of fiber ports	2
Communication port	LC fiber connector Wavelength 1300 nm
Fiber cable	50/125 µm or 62.5/125 µm multimode (glass)

7.1.3.12 Double RJ-45 (HSR/PRP) Ethernet communication module

Table. 7.1.3.12 - 714. Technical data for the double RJ-45 100 Mbps Ethernet communication module.

General information	
Hardware configuration code	K
Spare part code	#SP-2XX-2RJ45(HSR/PRP)
Compatibility	AQ 210 series models AQ 250 series models AQ-ONE
Features	
Protocols	IEC 61850 IEC 104 Modbus/TCP DNP3 FTP
Redundancy	HSR and PRP
Data transfer rate	100 MB/s
System integration	Can be used for system protocols and for local programming
Ports	
Number of ports	2
Communication port	Copper Ethernet RJ-45

7.1.3.13 RS-232 & serial fiber communication module

Table. 7.1.3.13 - 715. Technical data for the RS-232 & serial fiber communication module.

General information	
PP Hardware configuration code	L
PG Hardware configuration code	M
GP Hardware configuration code	N
GG Hardware configuration code	O
PP Spare part code	#SP-2XX-232PP
PG Spare part code	#SP-2XX-232PG
GP Spare part code	#SP-2XX-232GP
GG Spare part code	#SP-2XX-232GG

© Arcteq Relays Ltd
IM00099

Compatibility	AQ 210 series models AQ 250 series models AQ-ONE
Serial fiber connections	
Connection types	• Plastic - Plastic • Plastic - Glass • Glass - Plastic • Glass - Glass
Wavelength (plastic)	660 nm
Wavelength (glass)	820 nm
Cable type	1 mm plastic fiber
RS-232 terminal block connections	
Maximum cross section (solid or stranded wire)	1.5 mm^2

7.1.4 Display

Table. 7.1.4 - 716. Technical data for the HMI TFT display (AQ-ONE small and medium version).

Dimensions and resolution	
Number of dots/resolution	480 x 800
Size	54 × 95 mm (2.12 × 3.74 in)
Display	
Type of display	TFT
Color	RGB color

Table. 7.1.4 - 717. Technical data for the HMI TFT display (AQ-ONE large version).

Dimensions and resolution	
Number of dots/resolution	800 x 480
Size	154.08 × 85.92 mm (6.06 × 3.38 in)
Display	
Type of display	TFT
Color	RGB color

7.2 Functions

7.2.1 Protection functions

7.2.1.1 Capacitor bank overload protection (Icol>; 49OL)

Table. 7.2.1.1 - 718. Technical data for the capacitor bank overload function.

Input signals	
Current inputs	Phase current inputs: I_{L1} (A), I_{L2} (B), I_{L3} (C)
Current input magnitudes	RMS phase currents TRMS phase currents Peak-to-peak phase currents
Pick-up	
Pick-up current setting	0.10…50.00 × I_n, setting step 0.01 × I_n
Inrush 2nd harmonic blocking	0.10…50.00 %I_{fund}, setting step 0.01 %I_{fund}
Inaccuracy: - Current - 2nd harmonic blocking	 ±0.5 %I_{set} or ±15 mA (0.10…4.0 × I_{set}) ±1.0 %-unit of the 2nd harmonic setting
Operation time	
Definite time function operating time setting	0.000…1800.000 s, setting step 0.005 s
Inaccuracy: - Definite time: I_m/I_{set} ratio > 3 - Definite time: I_m/I_{set} ratio = 1.05…3	 ±1.0 % or ±20 ms ±1.0 % or ±30 ms
IDMT setting parameters: - k Time dial setting for IDMT - A IDMT constant - B IDMT constant - C IDMT constant	 0.01…25.00, step 0.01 0…250.0000, step 0.0001 0…250.0000, step 0.0001 0…250.0000, step 0.0001
Inaccuracy: - IDMT operating time - IDMT minimum operating time	 ±1.5 % or ±20 ms ±20 ms
Retardation time (overshoot)	<25 ms
Instant operation time	
Start time and instant operation time (trip): - I_m/I_{set} ratio > 3 - I_m/I_{set} ratio = 1.05…3	 <35 ms (typically 25 ms) <50 ms
Reset	
Reset ratio	97 % of the pick-up current setting
Reset time setting Inaccuracy: Reset time	0.000…150.000 s, step 0.005 s ±1.0 % or ±50 ms

© Arcteq Relays Ltd

Instant reset time and start-up reset	<50 ms

NOTICE!
The release delay does not apply to phase-specific tripping!

7.2.1.2 Capacitor bank neutral unbalance protection (Cnu>; 50UB)

Table. 7.2.1.2 - 719. Technical data for the capacitor bank neutral unbalance function.

Measurement inputs	
Current inputs	Phase current inputs: I_{L1} (A), I_{L2} (B), I_{L3} (C)
Current input magnitudes	RMS phase currents TRMS phase currents Peak-to-peak phase currents
Pick-up	
Pick-up current setting	0.10…50.00 × I_n, setting step 0.0001 × I_n
Inrush 2nd harmonic blocking	0.10…50.00 %I_{fund}, setting step 0.01 %I_{fund}
Inaccuracy: - Current - 2nd harmonic blocking	 ±0.5 %I_{set} or ±15 mA (0.10…4.0 × I_{set}) ±1.0 %-unit of the 2nd harmonic setting
Operation time	
Definite time function operating time setting	0.000…1800.000 s, setting step 0.005 s
Inaccuracy: - Definite time: I_m/I_{set} ratio > 3 - Definite time: I_m/I_{set} ratio = 1.05…3	 ±1.0 % or ±20 ms ±1.0 % or ±30 ms
IDMT setting parameters: - k Time dial setting for IDMT - A IDMT constant - B IDMT constant - C IDMT constant	 0.01…25.00, step 0.01 0…250.0000, step 0.0001 0…250.0000, step 0.0001 0…250.0000, step 0.0001
Inaccuracy: - IDMT operating time - IDMT minimum operating time	 ±1.5 % or ±20 ms ±20 ms
Retardation time (overshoot)	<25 ms
Instant operation time	
Start time and instant operation time (trip): - I_m/I_{set} ratio > 3 - I_m/I_{set} ratio = 1.05…3	 <35 ms (typically 25 ms) <50 ms
Reset	
Reset ratio	97 % of the pick-up current setting

Reset time setting Inaccuracy: Reset time	0.000…150.000 s, step 0.005 s ±1.0 % or ±50 ms
Instant reset time and start-up reset	<50 ms

7.2.1.3 Capacitor bank current unbalance protection (Iuc>; 46C)

Table. 7.2.1.3 - 720. Technical data for the capacitor bank current unbalance function.

Measurement inputs	
Current inputs	Phase current inputs: I_{L1} (A), I_{L2} (B), I_{L3} (C)
Current input magnitudes	RMS phase currents TRMS phase currents Peak-to-peak phase currents
Pick-up	
Pick-up current setting	0.10…50.00 × I_n, setting step 0.0001 × I_n
Inrush 2nd harmonic blocking	0.10…50.00 %I_{fund}, setting step 0.01 %I_{fund}
Inaccuracy: - Current - 2nd harmonic blocking	 ±0.5 %I_{set} or ±15 mA (0.10…4.0 × I_{set}) ±1.0 %-unit of the 2nd harmonic setting
Operation time	
Definite time function operating time setting	0.000…1800.000 s, setting step 0.005 s
Inaccuracy: - Definite time: I_m/I_{set} ratio > 3 - Definite time: I_m/I_{set} ratio = 1.05…3	 ±1.0 % or ±20 ms ±1.0 % or ±30 ms
IDMT setting parameters: - k Time dial setting for IDMT - A IDMT constant - B IDMT constant - C IDMT constant	 0.01…25.00, step 0.01 0…250.0000, step 0.0001 0…250.0000, step 0.0001 0…250.0000, step 0.0001
Inaccuracy: - IDMT operating time - IDMT minimum operating time	 ±1.5 % or ±20 ms ±20 ms
Retardation time (overshoot)	<25 ms
Instant operation time	
Start time and instant operation time (trip): - I_m/I_{set} ratio > 3 - I_m/I_{set} ratio = 1.05…3	 <35 ms (typically 25 ms) <50 ms
Reset	
Reset ratio	97 % of the pick-up current setting
Reset time setting Inaccuracy: Reset time	0.000…150.000 s, step 0.005 s ±1.0 % or ±50 ms

© Arcteq Relays Ltd

Instant reset time and start-up reset	<50 ms

7.2.1.4 Non-directional overcurrent protection (I>; 50/51)

Table. 7.2.1.4 - 721. Technical data for the non-directional overcurrent function.

Measurement inputs	
Current inputs	Phase current inputs: I_{L1} (A), I_{L2} (B), I_{L3} (C)
Current input magnitudes	RMS phase currents TRMS phase currents Peak-to-peak phase currents
Pick-up	
Pick-up current setting	0.10…50.00 × I_n, setting step 0.01 × I_n
Inrush 2nd harmonic blocking	0.10…50.00 %I_{fund}, setting step 0.01 %I_{fund}
Inaccuracy: - Current - 2nd harmonic blocking	 ±0.5 %I_{set} or ±15 mA (0.10…4.0 × I_{set}) ±1.0 %-unit of the 2nd harmonic setting
Operation time	
Definite time function operating time setting	0.000…1800.000 s, setting step 0.005 s
Inaccuracy: - Definite time: I_m/I_{set} ratio > 3 - Definite time: I_m/I_{set} ratio = 1.05…3	 ±1.0 % or ±20 ms ±1.0 % or ±30 ms
IDMT setting parameters: - k Time dial setting for IDMT - A IDMT constant - B IDMT constant - C IDMT constant	 0.01…25.00, step 0.01 0…250.0000, step 0.0001 0…250.0000, step 0.0001 0…250.0000, step 0.0001
Inaccuracy: - IDMT operating time - IDMT minimum operating time	 ±1.5 % or ±20 ms ±20 ms
Retardation time (overshoot)	<30 ms
Instant operation time	
Start time and instant operation time (trip): - I_m/I_{set} ratio = 2 - I_m/I_{set} ratio = 5 - I_m/I_{set} ratio = 10	 Typically 25 ms Typically 16 ms Typically 12 ms
Reset	
Reset ratio	97 % of the pick-up current setting
Reset time setting Inaccuracy: Reset time	0.000…150.000 s, step 0.005 s ±1.0 % or ±50 ms
Instant reset time and start-up reset	<50 ms

NOTICE!
The release delay does not apply to phase-specific tripping!

7.2.1.5 Non-directional earth fault protection (I0>; 50N/51N)

Table. 7.2.1.5 - 722. Technical data for the non-directional earth fault function.

Measurement inputs	
Current input (selectable)	Residual current channel I_{01} (Coarse) Residual current channel I_{02} (Fine) Calculated residual current: I_{L1} (A), I_{L2} (B), I_{L3} (C)
Current input magnitudes	RMS residual current (I_{01}, I_{02} or calculated I_0) TRMS residual current (I_{01} or I_{02}) Peak-to-peak residual current (I_{01} or I_{02})
Pick-up	
Used magnitude	Measured residual current I01 (1 A) Measured residual current I02 (0.2 A) Calculated residual current I0Calc (5 A)
Pick-up current setting	0.0001…40.00 × I_n, setting step 0.0001 × I_n
Inaccuracy: - Starting I01 (1 A) - Starting I02 (0.2 A) - Starting I0Calc (5 A)	 ±0.5 %$I0_{set}$ or ±3 mA (0.005…10.0 × I_{set}) ±1.5 %$I0_{set}$ or ±1.0 mA (0.005…25.0 × I_{set}) ±1.0 %$I0_{set}$ or ±15 mA (0.005…4.0 × I_{set})
Operating time	
Definite time function operating time setting	0.000…1800.000 s, setting step 0.005 s
Inaccuracy: - Definite time: I_m/I_{set} ratio > 3 - Definite time: I_m/I_{set} ratio = 1.05…3	 ±1.0 % or ±20 ms ±1.0 % or ±30 ms
IDMT setting parameters: - k Time dial setting for IDMT - A, B, C IDMT constants	 0.01…25.00, step 0.01 0…250.0000, step 0.0001
Inaccuracy: - IDMT operating time - IDMT minimum operating time	 ±1.5 % or ±20 ms ±20 ms
Retardation time (overshoot)	<30 ms
Instant operation time	
Start time and instant operation time (trip): - I_m/I_{set} ratio > 3.5 - I_m/I_{set} ratio = 1.05…3.5	 <50 ms (typically 35 ms) <55 ms
Reset	
Reset ratio	97 % of the pick-up current setting

© Arcteq Relays Ltd

Reset time setting Inaccuracy: Reset time	0.000…150.000 s, step 0.005 s ±1.0 % or ±50 ms
Instant reset time and start-up reset	<50 ms

NOTICE!
The operation and reset time accuracy does not apply when the measured secondary current in I02 is 1…20 mA. The pick-up is tuned to be more sensitive, and the operation times vary because of this.

7.2.1.6 Directional overcurrent protection (Idir>; 67)

Table. 7.2.1.6 - 723. Technical data for the directional overcurrent function.

Input signals	
Current inputs	Phase current inputs: I_{L1} (A), I_{L2} (B), I_{L3} (C)
Current input magnitudes	RMS phase currents TRMS phase currents Peak-to-peak phase currents
Current input calculations	Positive sequence current angle
Voltage inputs	U_{L1}, U_{L2}, U_{L3} U_{L12}, U_{L23}, U_{L31} + U0
Voltage input calculations	Positive sequence voltage angle
Pick-up	
Characteristic direction	Directional, non-directional
Operating sector center	-180.0…180.0 deg, setting step 0.1 deg
Operating sector size (+/-)	1.00…170.00 deg, setting step 0.10 deg
Pick-up current setting	0.10…40.00 × I_n, setting step 0.01 × I_n
Inaccuracy: - Current - U1/I1 angle (U > 15 V) - U1/I1 angle (U = 1…15 V)	 ±0.5 %I_{set} or ±15 mA (0.10…4.0 × I_{set}) ±0.20° ±1.5°
Operation time	
Definite time function operating time setting	0.000…1800.000 s, setting step 0.005 s
Inaccuracy: - Definite time: I_m/I_{set} ratio > 3 - Definite time: I_m/I_{set} ratio = 1.05…3	 ±1.0 % or ±20 ms ±1.0 % or ±35 ms
IDMT setting parameters: - k Time dial setting for IDMT - A IDMT constant - B IDMT constant - C IDMT constant	 0.01…25.00, step 0.01 0…250.0000, step 0.0001 0…250.0000, step 0.0001 0…250.0000, step 0.0001

Inaccuracy: - IDMT operating time - IDMT minimum operating time	 ±1.5 % or ±20 ms ±20 ms
Instant operation time	
Start time and instant operation time (trip): - I_m/I_{set} ratio > 3 - I_m/I_{set} ratio = 1.05…3	 <40 ms (typically 30 ms) <50 ms
Reset	
Reset ratio: - Current - U1/I1 angle	 97 % of the pick-up current setting 2.0°
Reset time setting Inaccuracy: Reset time	0.000…150.000 s, step 0.005 s ±1.0 % or ±50 ms
Instant reset time and start-up reset	<50 ms

NOTICE!
The minimum voltage for direction solving is 1.0 V secondary. During three-phase short-circuits the angle memory is active for 0.5 seconds in case the voltage drops below 1.0 V.

7.2.1.7 Directional earth fault protection (I0dir>; 67N/32N)

Table. 7.2.1.7 - 724. Technical data for the directional earth fault function.

Measurement inputs	
Current input (selectable)	Residual current channel I_{01} (Coarse) Residual current channel I_{02} (Fine) Calculated residual current: I_{L1} (A), I_{L2} (B), I_{L3} (C)
Current input magnitudes	RMS residual current (I_{01}, I_{02} or calculated I_0) TRMS residual current (I_{01} or I_{02}) Peak-to-peak residual current (I_{01} or I_{02})
Voltage input (selectable)	Residual voltage from U3 or U4 voltage channel Residual voltage calculated from U_{L1}, U_{L2}, U_{L3}
Voltage input magnitudes	RMS residual voltage U_0 Calculated RMS residual voltage U_0
Pick-up	
Characteristic direction	Unearthed (Varmetric 90°) Petersen coil GND (Wattmetric 180°) *Earthed* (Adjustable sector)
When the *earthed* mode is active: - Tripping area center - Tripping area size (+/-)	 0.00…360.00 deg, setting step 0.10 deg 45.00…135.00 deg, setting step 0.10 deg
Pick-up current setting Pick-up voltage setting	0.005…40.00 × I_n, setting step 0.001 × I_n 1.00…75.00 %$U0_n$, setting step 0.01 %$U0_n$

© Arcteq Relays Ltd

Inaccuracy: - Starting I01 (1 A) - Starting I02 (0.2 A) - Starting I0Calc (5 A) - Voltage U0 and U0Calc - U0/I0 angle (U > 15 V) - U0/I0 angle (U = 1…15 V)	 ±0.5 %$I0_{set}$ or ±3 mA (0.005…10.0 × I_{set}) ±1.5 %$I0_{set}$ or ±1.0 mA (0.005…25.0 × I_{set}) ±1.5 %$I0_{set}$ or ±15 mA (0.005…4.0 × I_{set}) ±1.0 %$U0_{set}$ or ±30 mV ±0.2° (I0Calc ±1.0°) ±1.0°
Operation time	
Definite time function operating time setting	0.000…1800.000 s, setting step 0.005 s
Inaccuracy: - Definite time (I_m/I_{set} ratio 1.05→)	±1.0 % or ±45 ms
IDMT setting parameters: - k Time dial setting for IDMT - A IDMT constant - B IDMT constant - C IDMT constant	 0.01…25.00, step 0.01 0…250.0000, step 0.0001 0…250.0000, step 0.0001 0…250.0000, step 0.0001
Inaccuracy: - IDMT operating time - IDMT minimum operating time	 ±1.5 % or ±25 ms ±20 ms
Instant operation time	
Start time and instant operation time (trip): - I_m/I_{set} ratio > 3 - I_m/I_{set} ratio = 1.05…3	 <55 ms (typically 45 ms) <65 ms
Reset	
Current and voltage reset U0/I0 angle	97 % of the pick-up current and voltage setting 2.0°
Reset time setting Inaccuracy: Reset time	0.000…150.000 s, step 0.005 s ±1.0 % or ±45 ms
Instant reset time and start-up reset	<50 ms

7.2.1.8 Intermittent earth fault protection (I0int>; 67NT)

Table. 7.2.1.8 - 725. Technical data for the intermittent earth fault function.

Measurement inputs	
Current inputs (selectable)	Residual current channel I_{01} (Coarse) Residual current channel I_{02} (Fine)
Current input magnitudes	Residual current samples
Voltage inputs (selectable)	Residual voltage from U3 or U4 voltage channel
Voltage input magnitude	Zero sequence voltage samples
Pick-up settings	
Spikes to trip	1…50, setting step 1

Pick-up current setting Pick-up voltage setting	0.05…40.00 × I_n, setting step 0.001 × I_n 1.00…100.00 %$U0_n$, setting step 0.01 %$U0_n$
Pick-up inaccuracy	
Starting I01 (1 A) Starting I02 (0.2 A) Voltage U0	±0.5 %$I0_{set}$ or ±3 mA (0.005…10.0 x I_{set}) ±1.5 %$I0_{set}$ or ±1.0 mA (0.005…25.0 x I_{set}) ±1.0 %$U0_{set}$ or ±30 mV
Operation time setting	
Definite time function operating time setting	0.000…1800.000 s, setting step 0.005 s
Operation time inaccuracy	
Definite time: I_m/I_{set} ratio 1.05→	±1.0 % or ±30 ms
Instant operation time	
Start time and instant operation time (trip): - I_m/I_{set} ratio 1.05→	<15 ms
Reset time	
Reset time setting (FWD and REV) Inaccuracy: Reset time	0.000…1800.000 s, step 0.005 s ±1.0 % or ±35 ms
Instant reset time and start-up reset	<50 ms

7.2.1.9 Negative sequence overcurrent/ phase current reversal/ current unbalance protection (I2>; 46/46R/46L)

Table. 7.2.1.9 - 726. Technical data for the current unbalance function.

Measurement inputs	
Current inputs	Phase current inputs: I_{L1} (A), I_{L2} (B), I_{L3} (C)
Current input calculations	Positive sequence current (I1) Negative sequence current (I2)
Pick-up	
Used magnitude	Negative sequence component I2pu Relative unbalance I2/I1
Pick-up setting	0.01…40.00 × I_n, setting step 0.01 × I_n (I2pu) 1.00…200.00 %, setting step 0.01 % (I2/I1)
Minimum phase current (at least one phase above)	0.01…2.00 × I_n, setting step 0.01 × I_n
Inaccuracy: - Starting I2pu - Starting I2/I1	 ±1.0 %-unit or ±100 mA (0.10…4.0 × I_n) ±1.0 %-unit or ±100 mA (0.10…4.0 × I_n)
Operating time	
Definite time function operating time setting	0.000…1800.000 s, setting step 0.005 s

© Arcteq Relays Ltd

Inaccuracy: - Definite time (I_m/I_{set} ratio > 1.05)	±1.5 % or ±60 ms
IDMT setting parameters: - k Time dial setting for IDMT - A IDMT Constant - B IDMT Constant - C IDMT Constant	 0.01…25.00, step 0.01 0…250.0000, step 0.0001 0…250.0000, step 0.0001 0…250.0000, step 0.0001
Inaccuracy: - IDMT operating time - IDMT minimum operating time	 ±2.0 % or ±30 ms ±20 ms
Retardation time (overshoot)	<5 ms
Instant operation time	
Start time and instant operation time (trip): - I_m/I_{set} ratio > 1.05	 <70 ms
Reset	
Reset ratio	97 % of the pick-up setting
Reset time setting Inaccuracy: Reset time	0.000…150.000 s, step 0.005 s ±1.5 % or ±60 ms
Instant reset time and start-up reset	<55 ms

7.2.1.10 Harmonic overcurrent protection (Ih>; 50H/51H/68H)

Table. 7.2.1.10 - 727. Technical data for the harmonic overcurrent function.

Measurement inputs	
Current inputs	Phase current inputs: I_{L1} (A), I_{L2} (B), I_{L3} (C) Residual current channel I_{01} (Coarse) Residual current channel I_{02} (Fine)
Pick-up	
Harmonic selection	2nd, 3rd, 4th, 5th, 6th 7th, 9th, 11th, 13th, 15th, 17th or 19th
Used magnitude	Harmonic per unit (× I_N) Harmonic relative (Ih/IL)
Pick-up setting	0.05…2.00 × I_N, setting step 0.01 × I_N (× I_N) 5.00…200.00 %, setting step 0.01 % (Ih/IL)
Inaccuracy: - Starting × I_N - Starting × Ih/IL	 <0.03 × I_N (2nd, 3rd, 5th) <0.03 × I_N tolerance to Ih (2nd, 3rd, 5th)
Operation time	
Definite time function operating time setting	0.000…1800.000 s, setting step 0.005 s
Inaccuracy: - Definite time (I_M/I_{SET} ratio >1.05)	 ±1.0 % or ±35 ms

IDMT setting parameters: k Time dial setting for IDMT A IDMT constant B IDMT constant C IDMT constant	 0.01…25.00, step 0.01 0…250.0000, step 0.0001 0…250.0000, step 0.0001 0…250.0000, step 0.0001
Inaccuracy: - IDMT operating time - IDMT minimum operating time	 ±1.5 % or ±20 ms ±20 ms
Instant operation time	
Start time and instant operation time (trip): I_M/I_{SET} ratio >1.05	 <50 ms
Reset	
Reset ratio	95 % of the pick-up setting
Reset time setting Inaccuracy: Reset time	0.000…150.000 s, step 0.005 s ±1.0 % or ±35 ms
Instant reset time and start-up reset	<50 ms

NOTICE!
Harmonics generally: The amplitude of the harmonic content must be least 0.02 × I_N when the relative mode (Ih/IL) is used!
Blocking: To achieve fast activation for blocking purposes with the harmonic overcurrent stage, note that the harmonic stage may be activated by a rapid load change or fault situation. An intentional activation lasts for approximately 20 ms if a harmonic component is not present. The harmonic stage stays active if the harmonic content is above the pick-up limit.
Tripping: When using the harmonic overcurrent stage for tripping, please ensure that the operation time is set to 20 ms (DT) or longer to avoid nuisance tripping caused by the above-mentioned reasons.

7.2.1.11 Circuit breaker failure protection (CBFP; 50BF/52BF)

Table. 7.2.1.11 - 728. Technical data for the circuit breaker failure protection function.

Measurement inputs	
Current inputs	Phase current inputs: I_{L1} (A), I_{L2} (B), I_{L3} (C) Residual current channel I_{01} (Coarse) Residual current channel I_{02} (Fine)
Current input magnitudes	RMS phase currents RMS residual current (I_{01}, I_{02} or calculated I_0)
Pick-up	
Monitored signals	Digital input status, digital output status, logical signals
Pick-up current setting: - IL1…IL3 - I01, I02, I0Calc	 0.10…40.00 × I_N, setting step 0.01 × I_N 0.005…40.00 × I_N, setting step 0.005 × I_N

© Arcteq Relays Ltd

Inaccuracy: - Starting phase current (5A) - Starting I01 (1 A) - Starting I02 (0.2 A) - Starting I0Calc (5 A)	 ±0.5 %I_{SET} or ±15 mA (0.10…4.0 × I_{SET}) ±0.5 %$I0_{SET}$ or ±3 mA (0.005…10.0 × I_{SET}) ±1.5 %$I0_{SET}$ or ±1.0 mA (0.005…25.0 × I_{SET}) ±1.0 %$I0_{SET}$ or ±15 mA (0.005…4.0 × I_{SET})
Operation time	
Definite time function operating time setting	0.050…1800.000 s, setting step 0.005 s
Inaccuracy: - Current criteria (I_M/I_{SET} ratio 1.05→) - DO or DI only	 ±1.0 % or ±55 ms ±15 ms
Reset	
Reset ratio	97 % of the pick-up current setting
Reset time	<50 ms

7.2.1.12 Low-impedance or high-impedance restricted earth fault/ cable end differential protection (I0d>; 87N)

Table. 7.2.1.12 - 729. Technical data for the restricted earth fault/cable end differential function.

Measurement inputs	
Current inputs	Phase current inputs: I_{L1} (A), I_{L2} (B), I_{L3} (C) Residual current channel I_{01} (Coarse) Residual current channel I_{02} (Fine)
Current input calculations	Calculated bias and residual differential currents
Pick-up	
Operating modes	Restricted earth fault Cable end differential
Characteristics	Biased differential with 3 settable sections and 2 slopes
Pick-up current sensitivity setting Slope 1 Slope 2 Bias (Turnpoint 1 & 2)	0.01…50.00 % (I_N), setting step 0.01 % 0.00…150.00 %, setting step 0.01 % 0.00…250.00 %, setting step 0.01 % 0.01…50.00 × I_N, setting step 0.01 × I_N
Inaccuracy - Starting	±3% of the set pick-up value > 0.5 × I_N setting. ±5 mA < 0.5 × I_N setting
Operation time	
Instant operation time 1.05 x I_{SET}	<30 ms
Reset	
Reset ratio	No hysteresis
Reset time	<40 ms

7.2.1.13 Overvoltage protection (U>; 59)

Table. 7.2.1.13 - 730. Technical data for the overvoltage function.

Measurement inputs	
Voltage inputs	U_{L1}, U_{L2}, U_{L3} U_{L12}, U_{L23}, U_{L31} (+ U_0)
Voltage input magnitudes	RMS line-to-line or line-to-neutral voltages
Pick-up	
Pick-up terms	1 voltage 2 voltages 3 voltages
Pick-up setting	1.00…250.00 %U_N, setting step 0.01 %U_N
Inaccuracy: - Voltage	±1.5 %U_{SET}
Operating time	
Definite time function operating time setting	0.000…1800.000 s, setting step 0.005 s
Inaccuracy: - Definite time (U_M/U_{SET} ratio 1.05→)	±1.0 % or ±35 ms
IDMT setting parameters: - k Time dial setting for IDMT - IDMT Multiplier	 0.01…60.00, step0.01 0…25.00, step 0.01
Inaccuracy: - IDMT operating time - IDMT minimum operating time	 ±1.5 % or ±20 ms ±20 ms
Instant operation time	
Start time and instant operation time (trip): - U_M/U_{SET} ratio 1.05→	 <50 ms
Reset	
Reset ratio	97 % of the pick-up voltage setting
Reset time setting Inaccuracy: Reset time	0.000…150.000 s, step 0.005 s ±1.0 % or ±45 ms
Instant reset time and start-up reset	<50 ms

7.2.1.14 Undervoltage protection (U<; 27)

Table. 7.2.1.14 - 731. Technical data for the undervoltage function.

Measurement inputs	
Voltage inputs	U_{L1}, U_{L2}, U_{L3} U_{L12}, U_{L23}, U_{L31} (+ U_0)

© Arcteq Relays Ltd

Voltage input magnitudes	RMS line-to-line or line-to-neutral voltages
Pick-up	
Pick-up terms	1 voltage 2 voltages 3 voltages
Pick-up setting	0.00…120.00 %U_N, setting step 0.01 %U_N
Inaccuracy: - Voltage	±1.5 %U_{SET} or ±30 mV
Low voltage block	
Pick-up setting	0.00…80.00 %U_N, setting step 0.01 %U_N
Inaccuracy: - Voltage	±1.5 %U_{SET} or ±30 mV
Operation time	
Definite time function operating time setting	0.000…1800.000 s, setting step 0.005 s
Inaccuracy: - Definite time (U_M/U_{SET} ratio 1.05→)	±1.0 % or ±35 ms
IDMT setting parameters: - k Time dial setting for IDMT - IDMT Multiplier	 0.01…60.00, step 0.01 0…25.00, step 0.01
Inaccuracy: - IDMT operating time - IDMT minimum operating time	 ±1.5 % or ±20 ms ±20 ms
Instant operation time	
Start time and instant operation time (trip): - U_M/U_{SET} ratio 1.05→	 <65 ms
Retardation time (overshoot)	<30 ms
Reset	
Reset ratio	103 % of the pick-up voltage setting
Reset time setting Inaccuracy: Reset time	0.000…150.000 s, step 0.005 s ±1.0 % or ±45 ms
Instant reset time and start-up reset	<50 ms

NOTICE!
The low-voltage block is not in use when its pick-up setting is set to 0 %. The undervoltage function trip signal is active when the LV block is disabled, and the device has no voltage injection.

NOTICE!
After the low voltage blocking condition, the undervoltage stage does not trip unless the voltage exceeds the pick-up setting first.

7.2.1.15 Neutral overvoltage protection (U0>; 59N)

Table. 7.2.1.15 - 732. Technical data for the neutral overvoltage function.

Measurement inputs	
Voltage input (selectable)	Residual voltage from U3 or U4 voltage channel Residual voltage calculated from U_{L1}, U_{L2}, U_{L3}
Voltage input magnitudes	RMS residual voltage U_0 Calculated RMS residual voltage U_0
Pick-up	
Pick-up voltage setting	1.00…50.00 % $U0_N$, setting step 0.01 × I_N
Inaccuracy: - Voltage U0 - Voltage U0Calc	 ±1.5 %$U0_{SET}$ or ±30 mV ±150 mV
Operation time	
Definite time function operating time setting	0.000…1800.000 s, setting step 0.005 s
Inaccuracy: - Definite time ($U0_M/U0_{SET}$ ratio 1.05→)	 ±1.0 % or ±45 ms
IDMT setting parameters: - k Time dial setting for IDMT - IDMT Multiplier	 0.01…60.00, step 0.01 0…25.00, step 0.01
Inaccuracy: - IDMT operating time - IDMT minimum operating time	 ±1.5 % or ±20 ms ±20 ms
Instant operation time	
Start time and instant operation time (trip): - $U0_M/U0_{SET}$ ratio 1.05→	 <50 ms
Reset	
Reset ratio	97 % of the pick-up voltage setting
Reset time setting Inaccuracy: Reset time	0.000 … 150.000 s, step 0.005 s ±1.0 % or ±50 ms
Instant reset time and start-up reset	<50 ms

7.2.1.16 Sequence voltage protection (U1/U2>/<; 47/27P/59NP)

Table. 7.2.1.16 - 733. Technical data for the sequence voltage function.

Measurement inputs	
Voltage inputs	U_{L1}, U_{L2}, U_{L3} U_{L12}, U_{L23}, U_{L31} (+ U_0)

© Arcteq Relays Ltd

Voltage input calculations	Positive sequence voltage (I1) Negative sequence voltage (I2)
Pick-up	
Pick-up setting	5.00…150.00 %U_N, setting step 0.01 %U_N
Inaccuracy: - Voltage	±1.5 %U_{SET} or ±30 mV
Low voltage block	
Pick-up setting	1.00…80.00 %U_N, setting step 0.01 %U_N
Inaccuracy: -Voltage	±1.5 %U_{SET} or ±30 mV
Operation time	
Definite time function operating time setting	0.000…1800.000 s, setting step 0.005 s
Inaccuracy -Definite Time (U_M/U_{SET} ratio 1.05→)	±1.0 % or ±35 ms
IDMT setting parameters: - k Time dial setting for IDMT - IDMT Multiplier	 0.01…60.00, step 0.01 0…25.00, step 0.01
Inaccuracy: - IDMT operating time - IDMT minimum operating time	 ±1.5 % or ±20 ms ±20 ms
Instant operation time	
Start time and instant operation time (trip): - U_M/U_{SET} ratio <0.95/1.05→	<65 ms
Reset	
Reset ratio	97 or 103 % of the pick-up voltage setting
Reset time setting Inaccuracy: Reset time	0.000…150.000 s, step 0.005 s ±1.0 % or ±35 ms
Instant reset time and start-up reset	<50 ms

7.2.1.17 Overfrequency and underfrequency protection (f>/<; 81O/81U)

Table. 7.2.1.17 - 734. Technical data for the overfrequency and underfrequency function.

Input signals	
Sampling mode	Fixed Tracking
Frequency reference 1 Frequency reference 2 Frequency reference 3	CT1IL1, CT2IL1, VT1U1, VT2U1 CT1IL2, CT2IL2, VT1U2, VT2U2 CT1IL3, CT2IL3, VT1U3, VT2U3
Pick-up	

f> pick-up setting f< pick-up setting	10.00…70.00 Hz, setting step 0.01 Hz 7.00…65.00 Hz, setting step 0.01 Hz
Inaccuracy (sampling mode): - Fixed - Tracking	±20 mHz (50/60 Hz fixed frequency) ±20 mHz (U > 30 V secondary) ±20 mHz (I > 30 % of rated secondary)
Operation time	
Definite time function operating time setting	0.000…1800.000 s, setting step 0.005 s
Inaccuracy: - Definite time (I_M/I_{SET} ratio +/- 50 mHz)	±1.5 % or ±50 ms (max. step size: 100 mHz)
Instant operation time	
Start time and instant operation time (trip): - I_M/I_{SET} ratio +/- 50 mHz (Fixed) - I_M/I_{SET} ratio +/- 50 mHz (Tracking)	<70 ms (max. step size: 100 mHz) <3 cycles or <60 ms (max. step size: 100 mHz)
Reset	
Reset ratio	0.020 Hz
Instant reset time and start-up reset: - I_M/I_{SET} ratio +/- 50 mHz (Fixed) - I_M/I_{SET} ratio +/- 50 mHz (Tracking)	<110 ms (max. step size: 100 mHz) <3 cycles or <70 ms (max. step size: 100 mHz)

NOTICE!
Measuring frequency requires that the secondary voltage exceeds 2 volts, or the current exceeds 0.25 amperes (peak-to peak).

NOTICE!
The frequency is measured two seconds after a signal is received.

7.2.1.18 Rate-of-change of frequency protection (df/dt>/<; 81R)

Table. 7.2.1.18 - 735. Technical data for the rate-of-change of frequency function.

Input signals	
Sampling mode	Fixed Tracking
Frequency reference 1 Frequency reference 2 Frequency reference 3	CT1IL1, CT2IL1, VT1U1, VT2U1 CT1IL2, CT2IL2, VT1U2, VT2U2 CT1IL3, CT2IL3, VT1U3, VT2U3
Pick-up	
df/dt >/< pick-up setting	0.15…1.00 Hz/s, setting step 0.01 Hz
f> limit	10.00…70.00 Hz, setting step 0.01 Hz
f< limit	7.00…65.00 Hz, setting step 0.01 Hz

© Arcteq Relays Ltd
IM00099

Pick-up inaccuracy	
- df/dt	±5.0 %I_{SET} or ±20 mHz/s
- frequency	±15 mHz (U > 30 V secondary) ±20 mHz (I > 30 % of rated secondary)
Operation time	
Definite time function operating time setting	0.000…1800.000 s, setting step 0.005 s
Inaccuracy: - Definite time (I_M/I_{SET} ratio +/- 50 mHz)	±1.5 % or ±110 ms (max. step size: 100 mHz)
Start time and instant operation time (trip):	
- f_M/f_{SET} ratio +/- 20 mHz (overreach)	<200 ms
- f_M/f_{SET} ratio +/- 200 mHz (overreach)	<90 ms
Reset	
f< and f> frequency limit	±0.020 Hz
df/dt	±10.0 % of pick-up or 50 mHz/s
Instant reset time and start-up reset: - f_M/f_{SET} ratio +/- 50 mHz	<325 ms (max. step size: 100 mHz)

NOTICE!
Frequency is measured two seconds after a signal is received.

7.2.1.19 Power protection (P, Q, S>/<; 32)

Table. 7.2.1.19 - 736. Technical data for the power protection function.

Measurement inputs	
Current inputs	Phase current inputs: I_{L1} (A), I_{L2} (B), I_{L3} (C)
Voltage inputs	U_{L1}, U_{L2}, U_{L3} U_{L12}, U_{L23}, U_{L31} (+ U_0)
Calculated measurements	Three-phase active, reactive or apparent power (P, Q or S) value based on the chosen or set nominal amplitude.
Pick-up	
Comparator selection	> or <
> or <	-500.000...500.000 %/MVA_N, setting step 0.005 %/MVA_N
Inaccuracy: - Active, reactive, or apparent power	Typically <1.0 %P_{SET}
Operation time	

Definite time function operating time setting	0.000…1800.000 s, setting step 0.005 s
Inaccuracy: - Definite time (P_M/P_{SET} ratio 1.05→)	±1.0 % or ±35 ms
Instant operation time	
Start time and instant operation time (trip): - PQS_M/PQS_{SET} ratio 1.05→	<40 ms
Reset	
Reset ratio	97 or 103 %P_{SET}
Instant reset time and start-up reset	<40 ms

7.2.1.20 Line thermal overload protection (TF>; 49F)

Table. 7.2.1.20 - 737. Technical data for the line thermal overload protection function.

Measurement inputs	
Current inputs	Phase current inputs: I_{L1} (A), I_{L2} (B), I_{L3} (C)
Current input magnitudes	TRMS phase currents (up to the 31st harmonic)
Settings	
Time constants τ	1
Time constant value	0.0…500.00 min, step 0.1 min
Service factor (maximum overloading)	0.01…5.00 × I_N, step 0.01 × I_N
Thermal model biasing	- Ambient temperature (Set –60.0…500.0 deg, step 0.1 deg and RTD) - Negative sequence current
Thermal replica temperature estimates	Selectable between °C and °F
Outputs	
- Alarm 1 - Alarm 2 - Thermal trip - Trip delay - Restart inhibit	0…150 %, step 1 % 0…150 %, step 1 % 0…150 %, step 1 % 0.000…3600.000 s, step 0.005 s 0…150 %, step 1 %
Inaccuracy	
- Starting - Operating time	±0.5 % of the set pick-up value ±5 % or ± 500 ms

© Arcteq Relays Ltd

7.2.1.21 Transformer thermal overload protection (TT>; 49T)

Table. 7.2.1.21 - 738. Technical data for the transformer thermal overload protection function.

Measurement inputs	
Current inputs	Phase current inputs: I_{L1} (A), I_{L2} (B), I_{L3} (C)
Current input magnitudes	TRMS phase currents (up to the 31st harmonic)
Setting specifications	
Time constants τ	1 heating, 1 cooling
Time constant value	0.0…500.00 min, step 0.1 min
Service factor (maximum overloading)	0.01…5.00 × I_N, step 0.01 × I_N
Thermal model biasing	- Ambient temperature (Set –60.0…500.0 deg, step 0.1 deg, and RTD) - Negative sequence current
Thermal replica temperature estimates	Selectable between ºC and ºF
Outputs	
- Alarm 1 - Alarm 2 - Thermal trip - Trip delay - Restart inhibit	0…150 %, step 1 % 0…150 %, step 1 % 0…150 %, step 1 % 0.000…3600.000 s, step 0.005 s 0…150 %, step 1 %
Inaccuracy	
- Starting - Operating time	±0.5 % of the set pick-up value ±5 % or ± 500 ms

7.2.1.22 Motor start/ locked rotor monitoring (Ist>; 48/14)

Table. 7.2.1.22 - 739. Technical data for the motor start/locked rotor monitoring function.

Measurement inputs	
Current inputs	Phase current inputs: I_{L1} (A), I_{L2} (B), I_{L3} (C)
Current input magnitudes	RMS phase currents
Pick-up	
Pick-up current setting	0.10…40.00 × I_N, setting step 0.10 × I_N
Inaccuracy: - Current	±0.5 %I_{SET} or ±15 mA (0.10…4.0 × I_{SET})
Time settings	
Starting time setting	0.000…1800.000 s, setting step 0.005 s

Operating mode	Definite time or cumulative I2t sum inverse operating time With or without a speed switch input Monitors only starts or both starts and stall
Start time	Max. 5 ms from the detected start-up or locked rotor situation
Inaccuracy: - Starting - Definite time operating time	±3% of the set pick-up value > 0.5 × I_N setting. 5 mA < 0.5 × I_N setting ±0.5 % or ±10 ms
Operation time	
Definite time function operating time setting	0.000…1800.000 s, setting step 0.005 s
Cumulative I2t sum inverse operation time	0.000…1800.000 s, setting step 0.005 s
Inaccuracy: - Definite time (I_M/I_{SET} ratio 0.95)	±1.0 % or ±40 ms
Instant operation time	
Start time and instant operation time (trip): - I_M/I_{SET} ratio 1.05→	<55 ms
Reset	
Reset ratio	97 % of the pick-up current setting
Reset time setting Inaccuracy: Reset time	0.000 …150.000 s, step 0.005 s ±1.0 % or ±35 ms
Instant reset time and start-up reset	<55 ms

7.2.1.23 Machine thermal overload protection (TM>; 49M)

Table. 7.2.1.23 - 740. Technical data for the machine thermal overload protection function.

Measurement inputs	
Current inputs	Phase current inputs: I_{L1} (A), I_{L2} (B), I_{L3} (C)
Current input magnitudes	TRMS phase currents (up to the 31st harmonic)
Pick-up (Heating)	
NPS bias factor (unbalance effect) Pick-up current setting Thermal alarm and trip level setting range Motor service factor	0.1…10.0, setting step 0.1 0.10…40.00 × I_N, setting step 0.01 × I_N 0.0…150.0 %, setting step 0.1 % 0.01…5.00 × I_N, setting step 0.01 × I_N
Cold condition: - Long heat T const (cold) - Short heat T const (cold)	 0.0…500.0 min, setting step 0.1 min 0.0…500.0 min, setting step 0.1 min

© Arcteq Relays Ltd
IM00099

Hot condition: - Long heat T const (hot) - Short heat T const (hot) - Hot condition theta limit (Cold → Hot spot)	 0.0…500.0 min, setting step 0.1 min 0.0…500.0 min, setting step 0.1 min 0.00…100.00 %, setting step 0.01 %
Reset (Cooling)	
Reset ratio (pick-up and alarms)	99 %
Stop condition: - Long cool T const (stop) - Short cool T const (stop) - Short cool T in use time	 0.0…500.0 min, setting step 0.1 min 0.0…500.0 min, setting step 0.1 min 0.0…3000.0 min, setting step 0.1 min
Run condition: - Long cool T const (stop)	 0.0…500.0 min, setting step 0.1 min
Operation time	
Definite time function operating time setting	0.0…3600.0 s, setting step 0.1 s
Inaccuracy: - Pick-up and reset	 ±1.0 % or ±500 ms
Environmental settings	
Thermal replica temperature estimates	Selectable between °C and °F
Ambient temperature effect k min. and max. range Ambient temperature min. and max. range	Linear or manually set curve 0.01...5.00 × I_N, setting step 0.01 × I_N –60…500 deg, setting step 1 deg
Thermal model biasing (ambient): - Set ambient temperature - RTD	 –60…500 deg, setting step 1 deg Used measured ambient value

7.2.1.24 Frequent start protection (N>; 66)

Table. 7.2.1.24 - 741. Technical data for the frequent start protection function.

Inputs	
Input magnitudes	Motor start monitor set start signals
Dependent on the motor thermal status	Yes
Settings	
Starts when cold	1…100 starts, step 1 start
Starts when hot	1…100 starts, step 1 start
Output data	
Monitor data	- Used starts - Available starts - Alarms, inhibits, blocks - Inhibit, alarm time on - Time since last start

Operation	
Start time	Max. 5 ms from the detected start-up
Inaccuracy	
Starting	±3% of the set pick-up value > 0.5 × I_N setting. 5 mA < 0.5 × I_N setting (from the motor start/locked rotor monitoring function)
Definite time operating time	±0.5 % or ±10 ms of the counter deduct

7.2.1.25 Non-directional undercurrent protection (I<; 37)

Table. 7.2.1.25 - 742. Technical data for the undercurrent function.

Measurement inputs	
Current inputs	Phase current inputs: I_{L1} (A), I_{L2} (B), I_{L3} (C)
Current input magnitudes	RMS phase currents
Pick-up	
Pick-up current setting	0.10…40.00 × I_N, setting step 0.10 × I_N
Inaccuracy: - Current	±0.5 %I_{SET} or ±15 mA (0.10…4.0 × I_{SET})
Operation time	
Definite time function operating time setting	0.00…150.00 s, setting step 0.005 s
Inaccuracy: - Definite time (I_M/I_{SET} ratio 0.95)	±1.0 % or ±30 ms
Instant operation time	
Start time and instant operation time (trip): - I_M/I_{SET} ratio <0.95	<50 ms
Reset	
Reset ratio	103 % of the pick-up current setting
Reset time setting Inaccuracy: Reset time	0.000…150.000 s, step 0.005 s ±1.0 % or ±35 ms
Instant reset time and start-up reset	<50 ms

7.2.1.26 Mechanical jam protection (Im>; 51M)

Table. 7.2.1.26 - 743. Technical data for the mechanical jam function.

Measurement inputs	
Current inputs	Phase current inputs: I_{L1} (A), I_{L2} (B), I_{L3} (C)

© Arcteq Relays Ltd

Current input magnitudes	RMS phase currents
Pick-up	
Pick-up current setting	0.10…40.00 × I_N, setting step 0.10 × I_N
Inaccuracy: - Current	±0.5 %I_{SET} or ±15 mA (0.10…4.0 × I_{SET})
Operation time	
Definite time function operating time setting	0.000…1800.000 s, setting step 0.005 s
Inaccuracy: - Definite time (I_M/I_{SET} ratio 0.95)	±1.0 % or ±30 ms
Instant operation time	
Start time and instant operation time (trip): - I_M/I_{SET} ratio 1.05→	<50 ms
Reset	
Reset ratio	97 % of the pick-up current setting
Reset time setting Inaccuracy: Reset time	0.000…150.000 s, step 0.005 s ±1.0 % or ±35 ms
Instant reset time and start-up reset	<50 ms

NOTICE!
Mechanical jam protection requires that the motor running condition has been met before tripping is possible.

7.2.1.27 Underimpedance protection (Z<; 21U)

Table. 7.2.1.27 - 744. Technical data for the underimpedance function.

Measurement inputs	
Current inputs	Phase current inputs: I_{L1} (A), I_{L2} (B), I_{L3} (C)
Voltage inputs	U_{L1}, U_{L2}, U_{L3} U_{L12}, U_{L23}, U_{L31} + U_0
Calculated impedances	Phase-to-phase impedances Phase-to-ground impedances Positive sequence impedance
Pick-up	
Pick-up setting	0.1…150.0 Ω, setting step 0.1 Ω
Inaccuracy: - Impedance calculation	Typically <1.0 %Z_{SET}
Operation time	

Definite time function operating time setting	0.000…1800.000 s, setting step 0.005 s
Inaccuracy: - Definite time (Z_M/Z_{SET} ratio <0.95)	±1.0 % or ±25 ms
Instant operation time	
Start time and instant operation time (trip): - Z_M/Z_{SET} ratio <0.95	<45 ms
Reset	
Reset ratio	103 %Z_{SET}
Reset time setting Inaccuracy: Reset time	0.000…150.000 s, step 0.005 s ±1.0 % or ±25 ms
Instant reset time and start-up reset	<45 ms

7.2.1.28 Voltage-restrained overcurrent protection (Iv>; 51V)

Table. 7.2.1.28 - 745. Technical data for the voltage-restrained overcurrent protection function.

Measurement inputs	
Current inputs	Phase current inputs: I_{L1} (A), I_{L2} (B), I_{L3} (C)
Current input magnitudes	RMS phase currents
Voltage inputs	U_{L1}, U_{L2}, U_{L3} U_{L12}, U_{L23}, U_{L31} + U_0
Voltage input calculation	Positive sequence voltage
Pick-up	
Pick-up current setting (point 1 & 2)	0.10…40.00 × I_N, setting step 0.01 × I_N
Pick-up voltage setting (point 1 & 2)	0.05…150.00 %U_N, setting step 0.01 %U_N
Inaccuracy: - Current - Voltage	±0.5 %I_{SET} or ±15 mA (0.10…4.0 × I_{SET}) ±1.5 %U_{SET} or ±30 mV
Operation time	
Definite time function operating time setting	0.000…1800.000 s, setting step 0.005 s
Inaccuracy: - Definite time (I_M/I_{SET} ratio 1.05→)	±1.0 % or ±25 ms
IDMT setting parameters: k Time dial setting for IDMT A IDMT constant B IDMT constant C IDMT constant	 0.01…25.00, step 0.01 0…250.0000, step 0.0001 0…250.0000, step 0.0001 0…250.0000, step 0.0001
Inaccuracy: - IDMT operating time - IDMT minimum operating time	±1.5 % or ±20 ms ±20 ms

© Arcteq Relays Ltd

Instant operation time	
Start time and instant operation time (trip): - I_M/I_{SET} ratio 1.05→	<40 ms
Reset	
Reset ratio: - Current	97 % of the pick-up current setting
Reset time setting Inaccuracy: Reset time	0.000…150.000 s, step 0.005 s ±1.0 % or ±25 ms
Instant reset time and start-up reset	<45 ms

7.2.1.29 100 % stator earth fault protection (U03rd>; 64S)

Table. 7.2.1.29 - 746. Technical data for the 100 % stator earth fault protection function.

Measurement updates	
Current inputs	Phase current inputs: I_{L1} (A), I_{L2} (B), I_{L3} (C)
Current input calculation	Positive sequence current (I1)
Voltage inputs	Residual voltage from U3 or U4 voltage channel
Voltage input magnitude	Zero sequence voltage third harmonic
Pick-up	
Pick-up voltage setting	1.00…95.00 %$U0_N$, setting step 0.01 %$U0_N$
Inaccuracy: - U0 3rd harmonic	±1.0 %$U0_{SET}$ or ±50 mV
Low-current blocking	
"No load" current setting	0.00…1.00 × I_N, setting step 0.01 × I_N
Inaccuracy: - Starting (I1)	±1.0 %$I1_{SET}$ or ±100 mA (0.10…4.0 × I_N)
Operation time	
Definite time function operating time setting	0.000…1800.000 s, setting step 0.005 s
Inaccuracy: - Definite time (I_M/I_{SET} ratio 0.95)	±1.0 % or ±30 ms
Instant operation time	
Start time and instant operation time (trip): - U_M/U_{SET} ratio <0.95	<60 ms
Reset	
Reset ratio	103 % of the pick-up voltage setting

Reset time setting Inaccuracy: Reset time	0.000…150.000 s, step 0.005 s ±1.0 % or ±30 ms
Instant reset time and start-up reset	<45 ms

NOTICE!
"No load" current setting: The "No load" current setting value of 0.00 × I_N is only for commissioning purpose. When using the device under normal conditions always use the value 0.01 × I_N or greater.

7.2.1.30 Power factor protection (PF<; 55)

Table. 7.2.1.30 - 747. Technical data for the power factor protection function.

Measurement inputs	
Current inputs	Phase current inputs: I_{L1} (A), I_{L2} (B), I_{L3} (C)
Voltage inputs	U_{L1}, U_{L2}, U_{L3} U_{L12}, U_{L23}, U_{L31} (+ U_0)
Calculated measurement	Three-phase power factor
Pick-up	
Pick-up setting	0.00…0.99, setting step 0.01
Inaccuracy: - power factor (when U > 1.0 V and I > 0.1 A)	±0.001
Operation time	
Definite time function operating time setting	0.000…1800.000 s, setting step 0.005 s
Inaccuracy: - Definite time (at least 0.01 below the setting)	±1.0 % or ±30 ms
Instant operation time	
Start time and instant operation time (trip): - at least 0.01 below the setting	<50 ms
Reset	
Reset ratio	1.03 of the power factor setting
Reset time	<50 ms

NOTICE!
The minimum voltage for the power factor calculation is 1.0 V secondary and the minimum current is 0.1 A secondary.

© Arcteq Relays Ltd

7.2.1.31 Volts-per-hertz overexcitation protection (V/Hz>; 24)

Table. 7.2.1.31 - 748. Technical data for the volts-per-hertz overexcitation protection function.

Measurement inputs	
Voltage input	U_{L1}, U_{L2}, U_{L3} U_{L12}, U_{L23}, U_{L31}
Voltage input magnitude	Maximum line-to-line voltage
Frequency reference 1 Frequency reference 2 Frequency reference 3	CT1IL1, CT2IL1, VT1U1, VT2U1 CT1IL2, CT2IL2, VT1U2, VT2U2 CT1IL3, CT2IL3, VT1U3, VT2U3
Pick-up	
Pick-up setting	0.01…75.00 %, setting step 0.01 %
Inaccuracy: - V/Hz	±1.0 %
Operation time	
Definite time function operating time setting	0.000…1800.000 s, setting step 0.005 s
Inaccuracy: - Definite time (VHZ_M/VHZ_{SET} ratio 1.05)	±1.0 % or ±25 ms
Instant operation time	
Start time and instant operation time (trip): - VHZ_M/VHZ_{SET} ratio 1.05)	<40 ms
Reset	
Reset ratio	97 % of the pick-up setting
Reset time setting Inaccuracy: Reset time	0.000…150.000 s, step 0.005 s ±1.0 % or ±25 ms
Instant reset time and start-up reset	<40 ms

7.2.1.32 Underexcitation protection (Q<; 40)

Table. 7.2.1.32 - 749. Technical data for the underexcitation protection function.

Measurement inputs	
Current inputs	Phase current inputs: I_{L1} (A), I_{L2} (B), I_{L3} (C)
Voltage inputs	U_{L1}, U_{L2}, U_{L3} U_{L12}, U_{L23}, U_{L31} + U_0
Calclucated measurements	Three-phase reactive power
Pick-up	
Pick-up setting	-1 000 000.00…0.00 kVar, setting step 0.01 kVar

Inaccuracy: - Reactive power	Typically <1.0 %Q_{SET}
Operation time	
Definite time function operating time setting	0.000…1800.000 s, setting step 0.005 s
Inaccuracy: - Definite time (Q_M/Q_{SET} ratio 1.05→)	±1.0 % or ±35 ms
Instant operation time	
Start time and instant operation time (trip): - Q_M/Q_{SET} ratio <0.95	<50 ms
Reset	
Reset ratio	97 % of the set pick-up value
Reset time setting Inaccuracy: Reset time	0.000…150.000 s, step 0.005 s ±1.0 % or ±35 ms
Instant reset time and start-up reset	<50 ms

NOTICE!
Voltage measurement starts from 0.5 V and current measurement from 50 mA. If either or both are missing the reactive power measurement is 0 kVar.

7.2.1.33 Transformer status monitoring

Table. 7.2.1.33 - 750. Technical data for the transformer status monitoring function.

Features	
Control scale	Common transformer data settings for all functions in the transformer module, the protection logic, the HMI and the I/O.
Settings	Transformer application nominal data
Other features	Status hours counters (normal load, overload, high overload) Transformer status signals Transformer data for functions
Outputs	
Light/no load	$I_M < 0.2 \times I_N$
Inrush HV side detected	$I_M < 0.2 \times I_N \rightarrow I_M > 1.3 \times I_N$
Inrush LV side detected	$I_M < 0.2 \times I_N \rightarrow I_M > 1.3 \times I_N$
Load normal	$I_M > 0.2 \times I_N$… $I_M < 1.0 \times I_N$
Overloading	$I_M > 1.0 \times I_N$… $I_M < 1.3 \times I_N$
High overload	$I_M > 1.3 \times I_N$

© Arcteq Relays Ltd

Inaccuracy	
Current detection	±3 % of the set pick-up value > 0.5 × I_N setting. 5 mA < 0.5 × I_N setting
Detection time	±0.5 % or ±10 ms

7.2.1.34 Generator/motor/transformer differential protection (Idb>/Idi>/I0dHV>/I0dLV>; 87T/87G/87M/87N)

Table. 7.2.1.34 - 751. Technical data for the transformer differential protection function.

Measurement inputs	
Current inputs (CT1 and CT2 current measurement module)	Phase current inputs: I_{L1} (A), I_{L2} (B), I_{L3} (C) Residual current channel I_{01} (Coarse) Residual current channel I_{02} (Fine) Calculated residual current: I_{L1} (A), I_{L2} (B), I_{L3} (C)
Current input magnitudes	The phase currents of the high-voltage and the low-voltage sides. Residual current measurement for HV/LV REF protection. Phase currents 2nd and 5th harmonic measurement.
Characteristics (differential and REF)	
Differential calculation mode Bias calculation mode	Add or subtract (CT direction) Average or maximum (sensitivity)
Idb> pick-up Turnpoint 1 Slope 1 Turnpoint 2 Slope 2	0.01…100.00 %, step 0.01 %, default 10.00 % 0.01…50.00 × I_N, step 0.01× I_N, default 1.00 × I_N 0.01…250.00 %, step 0.01 %, default 10.00 % 0.01…50.00 × I_N, step 0.01 × I_N, default 3.00 × I_N 0.01…250.00 % by step 0.01 %, default 200.00 %
Idi> pick-up	200.00...1500.00 %, step 0.01 %, default 600.00 %
Internal harmonic blocking selection	None, 2nd harmonic, 5th harmonic, both 2nd and 5th harmonic.
2nd harmonic blocking pick-up	0.01…50.00 %, step 0.01 %, default 15.00 %
5th harmonic blocking pick-up	0.01…50.00 %, step 0.01 %, default 35.00 %
Inaccuracy: - Differential current - 2nd harmonic	±3.0 %ISET or ±75 mA (0.10…4.0 x ISET) ±1.5 %I_{SIDE1}
Instant operation time	
Instant operation time >1.05 × I_{SET}	<40 ms (Harmonic blocking active)
Instant operation time >3.00 × I_{SET}	<30 ms (Harmonic blocking active)
Instant operation time >3.00 × I_{SET}	~15 ms (No harmonic blocking)
Reset	

Reset ratio: differential current	97 % of the differential current setting (typically)
Reset time	<50 ms

NOTICE!
The harmonic current is set and calculated according to the highest amplitude of side 1, 2 or 3 currents (Ih%/$I_{SIDE1/2/3}$). The harmonic current is calculated individually for each phase.

7.2.1.35 Line differential protection (Idb>/Idi>; 87L)

Table. 7.2.1.35 - 752. Technical data for the transformer differential protection function.

Measurement inputs	
Current inputs	Phase current inputs: I_{L1} (A), I_{L2} (B), I_{L3} (C) Residual current channel I_{01} (Coarse) Residual current channel I_{02} (Fine) Calculated residual current: I_{L1} (A), I_{L2} (B), I_{L3} (C)
Current input magnitudes	The phase currents of the local and the remote sides. Phase currents 2nd and 5th harmonic measurement.
Characteristics (differential and REF)	
Differential calculation mode Bias calculation mode	Add or subtract (CT direction) Average or maximum (sensitivity)
Idb> pick-up Turnpoint 1 Slope 1 Turnpoint 2 Slope 2	0.10…100.00 %, step 0.01 %, default 10.00 % 0.01…50.00 × I_N, step 0.01 × I_N, default 1.00 × I_N 0.01…250.00 %, step 0.01 %, default 10.00 % 0.01…50.00 × I_N, step 0.01 × I_N, default 3.00 × I_N 0.01…250.00 %, step 0.01 %, default 200.00 %
Idi> pick-up	200.00...1500.00 %, step 0.01 %, default 600.00 %
Internal harmonic blocking selection	None, 2nd harmonic, 5th harmonic, both 2nd and 5th harmonic.
2nd harmonic blocking pick-up	0.01…50.00 %, step 0.01 %, default 15.00 %
5th harmonic blocking pick-up	0.01…50.00 %, step 0.01 %, default 35.00 %
Inaccuracy: - Differential current	±5.0 %I_{SET} or ±30 mA (0.10…4.0 × I_{SET})
Minimum required bias current to start differential calculation	0.05 × I_N
Instant operation time	
Instant operation time	Typically 20 ms
Reset	
Reset ratio: differential current	97 % of the differential current setting (typically)

© Arcteq Relays Ltd

Reset time	<45 ms

7.2.1.36 Distance protection (Z<;21)

Table. 7.2.1.36 - 753. Technical data for the distance protection function.

Measurement inputs	
Current inputs	Phase current inputs: I_{L1} (A), I_{L2} (B), I_{L3} (C) Residual current channel I_{01} (Coarse) Residual current channel I_{02} (Fine) Calculated residual current: I_{L1} (A), I_{L2} (B), I_{L3} (C)
Voltage inputs	UL1, UL2, UL3 UL12, UL23, UL31 + U0
Impedance calculations	Primary and Secondary loop impedances (P-P, P-E) and impedance angles
Characteristics	
Characteristic type	Quadrilateral
Characteristic direction	Forward, reverse, non-directional
Inaccuracy: - Impedance	±5.0 %Z_{SET}
Instant operation time	
Instant operation time	<40 ms
Reset	
Reset ratio: - Current - Impedance	97 % of the differential current setting (typically)
Reset time	<45 ms

7.2.1.37 Arc fault protection (IArc>/I0Arc>; 50Arc/50NArc) (optional)

Table. 7.2.1.37 - 754. Technical data for the arc fault protection function.

Measurement inputs	
Current inputs	Phase current inputs: I_{L1} (A), I_{L2} (B), I_{L3} (C) Residual current channel I_{01} (Coarse) Residual current channel I_{02} (Fine)
Current input magnitudes	Sample-based phase current measurement Sample-based residual current measurement
Arc point sensor inputs	Channels S1, S2, S3, S4 (pressure and light sensor, or light-only sensor) Up to three (3) sensors per channel
System frequency operating range	6.00…75.00 Hz

Pick-up	
Pick-up current setting (phase current) Pick-up current setting (residual current) Pick-up light intensity	0.05…40.00 × I_N, setting step 0.01 × I_N 0.05…40.00 × I_N, setting step 0.01 × I_N 8, 25 or 50 kLx (the sensor is selected in the order code)
Starting inaccuracy (IArc> and I0Arc>)	±3 % of the set pick-up value > 0.5 × I_N setting. 5 mA < 0.5 × I_N setting.
Point sensor detection radius	180 degrees
Operation time	
Light only: - Semiconductor outputs HSO1 and HSO2 - Regular relay outputs	Typically 7 ms (3…12 ms) Typically 10 ms (6.5…15 ms)
Light + current criteria (zone 1…4): - Semiconductor outputs HSO1 and HSO2 - Regular relay outputs	Typically 10 ms (6.5…14 ms) Typically 14 ms (10…18 ms)
Arc BI only: - Semiconductor outputs HSO1 and HSO2 - Regular relay outputs	Typically 7 ms (2…12 ms) Typically 10 ms (6.5…15 ms)

7.2.2 Control functions

7.2.2.1 Automatic voltage regulator (90)

Table. 7.2.2.1 - 755. Technical data for the automatic voltage regulator function.

Measurement inputs	
Voltage inputs	U_{L1}, U_{L2}, U_{L3} U_{L12}, U_{L23}, U_{L31} + U_0 U4 channel voltage
Voltage input magnitudes	RMS line-to-line voltages U4 channel RMS voltage
Current inputs	Phase current inputs: I_{L1} (A), I_{L2} (B), I_{L3} (C)
Current input magnitudes (I> blocking)	RMS phase currents
Pick-up	
Pick-up area (U>/<, U>>/<<, U>>>/<<<) Tap step effect (1…70 steps) I> blocking	0.10…30.00 %U_N, setting step 0.01 %U_N 0.01…10.00 %U_N, setting step 0.01 %U_N 0.00…40.00 × I_N, setting step 0.01 × I_N
Inaccuracy: - Voltage - Current	±1.5 %U_{SET} ±0.5 %I_{SET} or ±15 mA (0.10…4.0 × I_{SET})
Operating time	

© Arcteq Relays Ltd

Control pulse min/max and time between Definite time function operating time setting	0.00…1800.00 s, setting step 0.005 s 0.00…1800.00 s, setting step 0.005 s
Inaccuracy: - Definite time (U_M/U_{SET} ratio 1.05→)	±1.5 % or ±50 ms
Integrated operating time setting: - Multiplier (k)	0.000…1800.000, setting step 0.005
Inaccuracy: - IDMT operating time - IDMT minimum operating time	±1.5 % or ±35 ms ±20 ms
Instant operation time	
Start time and instant operation time (trip): - U_M/U_{SET} ratio 1.05→	<50 ms
Reset	
Reset ratio: - Voltage - Current	95/105 % of the pick-up voltage setting 97 % of the pick-up current setting
Instant reset time and start-up reset	<50 ms

7.2.2.2 Setting group selection

Table. 7.2.2.2 - 756. Technical data for the setting group selection function.

Settings and control modes	
Setting groups	8 independent, control-prioritized setting groups
Control scale	Common for all installed functions which support setting groups
Control mode	
Local	Any binary signal available in the device
Remote	Force change overrule of local controls either from the setting tool, HMI or SCADA
Operation time	
Reaction time	<5 ms from receiving the control signal

7.2.2.3 Object control and monitoring

Table. 7.2.2.3 - 757. Technical data for the object control and monitoring function.

General	
Number of objects	1 5 10

Supported object types	Circuit breaker Circuit breaker with withdrawable cart Disconnector (MC) Disconnector (GND) Custom object image
Signals	
Input signals	Digital inputs Software signals
Output signals	Close command output Open command output
Operation time	
Breaker traverse time setting	0.02…500.00 s, setting step 0.02 s
Max. close/open command pulse length	0.02…500.00 s, setting step 0.02 s
Control termination time out setting	0.02…500.00 s, setting step 0.02 s
Inaccuracy: - Definite time operating time	±0.5 % or ±10 ms
Breaker control operation time	
External object control time	<75 ms
Object control during auto-reclosing	See the technical sheet for the auto-reclosing function.

Table. 7.2.2.3 - 758. Technical data for the circuit breaker wear monitoring function.

Pick-up	
Breaker characteristics settings: - Nominal breaking current - Maximum breaking current - Operations with nominal current - Operations with maximum breaking current	 0.00…100.00 kA, setting step 0.001 kA 0.00…100.00 kA, setting step 0.001 kA 0…200 000 operations, setting step 1 operation 0…200 000 operations, setting step 1 operation
Pick-up setting for Alarm 1 and Alarm 2	0…200 000 operations, setting step 1 operation
Inaccuracy	
Inaccuracy for current/operations counter: - Current measurement element - Operation counter	 0.1× I_N > I < 2 × I_N ±0.2 % of the measured current, rest 0.5 % ±0.5 % of operations deducted

7.2.2.4 Indicator object monitoring

Table. 7.2.2.4 - 759. Technical data for the indicator object monitoring function.

General	
Number of objects	5 10 20

© Arcteq Relays Ltd

Supported object types	Disconnector (GND) Custom object image
Signals	
Input signals	Digital inputs Software signals

7.2.2.5 Cold load pick-up (CLPU)

Table. 7.2.2.5 - 760. Technical data for the cold load pick-up function.

Measurement inputs	
Current inputs	Phase current inputs: I_{L1} (A), I_{L2} (B), I_{L3} (C)
Current input magnitudes	RMS phase currents
Pick-up	
Pick-up current setting - $I_{LOW}/I_{HIGH}/I_{OVER}$	0.01…40.00 × I_N, setting step 0.01 × I_N
Reset ratio	97 % of the pick-up current setting
Inaccuracy: - Current	±0.5 %I_{SET} or ±15 mA (0.10…4.0 × I_{SET})
Operation time	
Definite time function operating time settings: - t_{SET} - t_{MAX} - t_{MIN}	0.000…1800.000 s, setting step 0.005 s 0.000…1800.000 s, setting step 0.005 s 0.000…1800.000 s, setting step 0.005 s
Inaccuracy: - Definite time (I_M/I_{SET} ratio = 1.05/0.95)	±1.0 % or ±45 ms
Instant operation time	
CLPU activation and release	<45 ms (measured from the trip contact)

NOTICE!
A single-phase current (IL1, IL2 or IL3) is enough to prolong or release the blocking during an overcurrent condition.

7.2.2.6 Switch-on-to-fault (SOTF)

Table. 7.2.2.6 - 761. Technical data for the switch-on-to-fault function.

Initialization signals	
SOTF activate input	Any blocking input signal (Object closed signal, etc.)
Pick-up	

SOTF function input	Any blocking input signal (I> or similar)
SOTF activation time	
Activation time	<40 ms (measured from the trip contact)
SOTF release time	
Release time setting	0.000…1800.000 s, setting step 0.005 s
Inaccuracy: - Definite time	±1.0 % or ±30 ms
SOTF instant release time	<40 ms (measured from the trip contact)

7.2.2.7 Auto-reclosing (0 → 1; 79)

Table. 7.2.2.7 - 762. Technical data for the auto-reclosing function.

Input signals	
Input signals	Software signals (protection, logics, etc.) Binary inputs
Requests	
REQ1-5	5 priority request inputs; can be set parallel as signals to each request
Shots	
1-5 shots	5 independent or scheme-controlled shots in each AR request
Operation time	
Operating time settings: - Lockout after successful AR - Object close reclaim time - AR shot starting delay - AR shot dead time delay - AR shot action time - AR shot specific reclaim time	 0.000…1800.000 s, setting step 0.005 s 0.000…1800.000 s, setting step 0.005 s 0.000…1800.000 s, setting step 0.005 s 0.000…1800.000 s, setting step 0.005 s 0.000…1800.000 s, setting step 0.005 s 0.000…1800.000 s, setting step 0.005 s
Inaccuracy	
AR starting (from a protection stage's START signal)	±1.0 % or ±30 ms (AR delay)
AR starting (from a protection stage's TRIP signal)	Trip delay inaccuracy +25 ms (Protection + AR delay)
Dead time	±1.0 % or ±35 ms (AR delay)
Action time	±1.0 % or ±30 ms (AR delay)
Instant starting time	
Instant operation time	Protection activation delay + 15 ms (Protection + AR delay)

© Arcteq Relays Ltd

7.2.2.8 Zero sequence recloser (79N)

Table. 7.2.2.8 - 763. Technical data for the zero sequence recloser function.

Measurement inputs	
Voltage input	Residual voltage from U4 voltage channel
Voltage input magnitudes	RMS residual voltage U_0
Reset	
Reset time setting Inaccuracy: Reset time	0.000…150.000 s, step 0.005 s ±1.0 % or ±35 ms

NOTICE!
The zero sequence recloser is a combined function of the U0> (neutral overvoltage) protection, the programmable object (breaker) and the recloser itself.

7.2.2.9 Vector jump (Δφ; 78)

Table. 7.2.2.9 - 764. Technical data for the vector jump protection function.

Measurement inputs	
Voltage inputs	U_{L1}, U_{L2}, U_{L3} U_{L12}, U_{L23}, U_{L31} + U_0
Monitored voltages	Any or all system line-to-line voltage(s) Any or all system line-to-neutral voltage(s) Specifically chosen line-to-line or line-to-neutral voltage U4 channel voltage
Pick-up	
Pick-up setting	0.05…30.00°, setting step 0.01°
Inaccuracy: - Voltage angle	±30% overreach or 1.00 °
Low-voltage blocking	
Pick-up setting	0.01…100.00 %U_N, setting step 0.01 %U_N
Inaccuracy: - Voltage	±1.5 %U_{SET} or ±30 mV
Instant operation time	
Alarm and trip operation time: - (Im/Iset ratio > ±30% overreach or 1.00 °)	<40 ms (typically 30 ms) 50/60 Hz <50 ms (typically 40 ms) 16.67 Hz
Reset	
Trip pulse	~5-10ms

7.2.2.10 Synchrocheck (ΔV/Δa/Δf; 25)

Table. 7.2.2.10 - 765. Technical data for the synchrocheck function.

Input signals	
Voltage inputs	U1, U2, U3 or U4 voltage channel
Voltage input magnitudes	RMS line-to-line or line-to-neutral voltages U3 or U4 voltage channel RMS
Pick-up	
U diff < setting	2.00…50.00 %U_N, setting step 0.01 %U_N
Angle diff < setting	3.0…90.0 deg, setting step 0.10 deg
Freq diff < setting	0.05…0.50 Hz, setting step 0.01 Hz
Inaccuracy: - Voltage - Frequency - Angle	 ±3.0 %U_{SET} or ±0.3 %U_N ±25 mHz (U> 30 V secondary) ±1.5° (U> 30 V secondary)
Reset	
Reset ratio: - Voltage - Frequency - Angle	 99 % of the pick-up voltage setting 20 mHz ±2.0°
Activation time	
Activation (to LD/DL/DD) Activation (to Live Live)	<35 ms <60 ms
Reset	<40 ms
Bypass modes	
Voltage check mode (excluding LL)	LL+LD, LL+DL, LL+DD, LL+LD+DL, LL+LD+DD, LL+DL+DD, bypass
U live > limit U dead < limit	0.10…100.00 %U_N, setting step 0.01 %U_N 0.00…100.00 %U_N, setting step 0.01 %U_N

NOTICE!
The minimum voltage for direction and frequency solving is 20.0 %U_N.

7.2.3 Monitoring functions

7.2.3.1 Current transformer supervision

Table. 7.2.3.1 - 766. Technical data for the current transformer supervision function.

Measurement inputs

© Arcteq Relays Ltd

Current inputs	Phase current inputs: I_{L1} (A), I_{L2} (B), I_{L3} (C) Residual current channel I_{01} (Coarse) (optional) Residual current channel I_{02} (Fine) (optional)
Current input magnitudes	RMS phase currents RMS residual current (I_{01}, I_{02}) (optional)
Pick-up	
Pick-up current settings: - I_{SET} high limit - I_{SET} low limit - I_{SUM} difference - I_{SET} ratio - I2/I1 ratio	0.10…40.00 × I_N, setting step 0.01 × I_N 0.10…40.00 × I_N, setting step 0.01 × I_N 0.10…40.00 × I_N, setting step 0.01 × I_N 0.01…100.00 %, setting step 0.01 % 0.01…100.00 %, setting step 0.01 %
Inaccuracy: - Starting IL1, IL2, IL3 - Starting I2/I1 - Starting I01 (1 A) - Starting I02 (0.2 A)	±0.5 %I_{SET} or ±15 mA (0.10…4.0 × I_{SET}) ±1.0 %$I2_{SET}$ / $I1_{SET}$ or ±100 mA (0.10…4.0 × I_N) ±0.5 %$I0_{SET}$ or ±3 mA (0.005…10.0 × I_{SET}) ±1.5 %$I0_{SET}$ or ±1.0 mA (0.005…25.0 × I_{SET})
Time delay for alarm	
Definite time function operating time setting	0.000…1800.000 s, setting step 0.005 s
Inaccuracy_ - Definite time (I_M/I_{SET} ratio > 1.05)	±2.0 % or ±80 ms
Instant operation time (alarm): - I_M/I_{SET} ratio > 1.05	<80 ms
Reset	
Reset ratio	97/103 % of the pick-up current setting
Instant reset time and start-up reset	<80 ms

7.2.3.2 Voltage transformer supervision (60)

Table. 7.2.3.2 - 767. Technical data for the voltage transformer supervision function.

Measurement inputs	
Voltage inputs	U_{L1}, U_{L2}, U_{L3} U_{L12}, U_{L23}, U_{L31}
Voltage input magnitudes	RMS line-to-line or line-to-neutral voltages
Pick-up	
Pick-up settings: - Voltage (low pick-up) - Voltage (high pick-up) - Angle shift limit	0.05…0.50 × U_N, setting step 0.01 × U_N 0.50…1.10 × U_N, setting step 0.01 × U_N 2.00…90.00 deg, setting step 0.10 deg
Inaccuracy: - Voltage - U angle (U> 1 V)	±1.5 %U_{SET} ±1.5°

External line/bus side pick-up (optional)	0 → 1
Time delay for alarm	
Definite time function operating time setting	0.000…1800.000 s, setting step 0.005 s
Inaccuracy: - Definite time (U_M/U_{SET} ratio > 1.05/0.95)	±1.0 % or ±35 ms
Instant operation time (alarm): - U_M/U_{SET} ratio > 1.05/0.95	<80 ms
VTS MCB trip bus/line (external input)	<50 ms
Reset	
Reset ratio	97/103 % of the pick-up voltage setting
Reset time setting Inaccuracy: Reset time	0.000…150.000 s, step 0.005 s ±2.0 % or ±80 ms
Instant reset time and start-up reset	<50 ms
VTS MCB trip bus/line (external input)	<50 ms

NOTICE!
When turning on the auxiliary power of a device, the normal condition of a stage has to be fulfilled before tripping.

7.2.3.3 Circuit breaker wear monitoring

Table. 7.2.3.3 - 768. Technical data for the circuit breaker wear monitoring function.

Pick-up	
Breaker characteristics settings: - Nominal breaking current - Maximum breaking current - Operations with nominal current - Operations with maximum breaking current	 0.00…100.00 kA, setting step 0.001 kA 0.00…100.00 kA, setting step 0.001 kA 0…200 000 operations, setting step 1 operation 0…200 000 operations, setting step 1 operation
Pick-up setting for Alarm 1 and Alarm 2	0…200 000 operations, setting step 1 operation
Inaccuracy	
Inaccuracy for current/operations counter: - Current measurement element - Operation counter	 0.1× I_N > I < 2 × I_N ±0.2 % of the measured current, rest 0.5 % ±0.5 % of operations deducted

7.2.3.4 Current total harmonic distortion

Table. 7.2.3.4 - 769. Technical data for the total harmonic distortion function.

Input signals

© Arcteq Relays Ltd

Current inputs	Phase current inputs: I_{L1} (A), I_{L2} (B), I_{L3} (C) Residual current channel I_{01} (Coarse) Residual current channel I_{02} (Fine)
Current input magnitudes	Current measurement channels (FFT result) up to the 31st harmonic component.
Pick-up	
Operating modes	Power THD Amplitude THD
Pick-up setting for all comparators	0.10…200.00 % , setting step 0.01 %
Inaccuracy	±3 % of the set pick-up value > 0.5 × I_N setting; 5 mA < 0.5 × I_N setting.
Time delay	
Definite time function operating time setting for all timers	0.000…1800.000 s, setting step 0.005 s
Inaccuracy: - Definite time operating time - Instant operating time, when I_M/I_{SET} ratio > 3 - Instant operating time, when I_M/I_{SET} ratio 1.05 < I_M/I_{SET} < 3	±0.5 % or ±10 ms Typically <20ms Typically <25 ms
Reset	
Reset time	Typically <10 ms
Reset ratio	97 %

7.2.3.5 Fault locator (21FL)

Table. 7.2.3.5 - 770. Technical data for the fault locator function.

Input signals	
Current inputs	Phase current inputs: I_{L1} (A), I_{L2} (B), I_{L3} (C)
Voltage inputs	U_{L1}, U_{L2}, U_{L3} U_{L12}, U_{L23}, U_{L31} + U_0
Calculated reactance magnitudes when line-to-neutral voltages available	XL12, XL23, XL31, XL1, XL2, XL3
Calculated reactance magnitudes when line-to-line voltages available	XL12, XL23, XL31
Pick-up	
Trigger current >	0.00…40.00 × I_N, setting step 0.01 × I_N
Inaccuracy: - Triggering	±0.5 %I_{SET} or ±15 mA (0.10…4.0 × I_{SET})
Reactance	

Reactance per kilometer	0.000…5.000 s, setting step 0.001 Ω/km
Inaccuracy: - Reactance	±5.0 % (typically)
Operation (Triggering)	
Activation	From the trip signal of any protection stage
Minimum operation time	At least 0.040 s of stage operation time required

7.2.3.6 Event logger

Table. 7.2.3.6 - 771. Technical data for the event logger function.

General information	
Event history capacity	15 000 events
Event timestamp resolution	1 ms

7.2.3.7 Disturbance recorder

Table. 7.2.3.7 - 772. Technical data for the disturbance recorder function.

Recorded values	
Recorder analog channels	0…20 channels Freely selectable
Recorder digital channels	0…96 channels Freely selectable analog and binary signals 1 ms or 5 ms sample rate (FFT)
Performance	
Sample rate	8, 16, 32 or 64 samples/cycle
Recording length	0.000…1800.000 s, setting step 0.001 s The maximum length is determined by the chosen signals.
Number of recordings	0…100, 60 MB of shared flash memory reserved The maximum number of recordings according to the chosen signals and operation time setting combined

7.3 Tests and environmental

Electrical environment compatibility

Table. 7.3 - 773. Disturbance tests.

All tests	CE-approved and tested according to EN 60255-26

© Arcteq Relays Ltd

Emissions	
Conducted emissions: EN 60255-26 Ch. 5.2, CISPR 22	150 kHz…30 MHz
Radiated emissions: EN 60255-26 Ch. 5.1, CISPR 11	30…5 000 MHz
Immunity	
Electrostatic discharge (ESD): EN 60255-26, IEC 61000-4-2	Air discharge 15 kV Contact discharge 8 kV
Electrical fast transients (EFT): EN 60255-26, IEC 61000-4-4	Power supply input 4 kV, 5/50 ns, 5 kHz Other inputs and outputs 4 kV, 5/50 ns, 5 kHz NOTE: Shielded cable required for ethernet communication
Surge: EN 60255-26, IEC 61000-4-5	Differential: 2 kV, 1.2/50 µs Common: 4 kV, 1.2/50 µs
Radiated RF electromagnetic field: EN 60255-26, IEC 61000-4-3	f = 80…2 700 MHz, 10 V/m
Conducted RF field: EN 60255-26, IEC 61000-4-6	f = 150 kHz…80 MHz, 10 V (RMS)

Table. 7.3 - 774. Voltage tests.

Dielectric voltage test	
EN 60255-27, IEC 60255-5, EN 60255-1	2.2 kV, 50 Hz, 1 min
Impulse voltage test	
EN 60255-27, IEC 60255-5	5 kV, 1.2/50 µs, 0.5 J

Physical environment compatibility

Table. 7.3 - 775. Mechanical tests.

Vibration test	
EN 60255-1, EN 60255-27, IEC 60255-21-1	2…13.2 Hz, ± 3.5 mm 13.2…100 Hz, ± 1.0 g
Shock and bump test	
EN 60255-1, EN 60255-27, IEC 60255-21-2	20 g, 1 000 bumps/dir.

Table. 7.3 - 776. Environmental tests.

Damp heat (cyclic)	
EN 60255-1, IEC 60068-2-30	Operational: +25…+55 °C, 93…97 % (RH), 12+12h
Dry heat	

EN 60255-1, IEC 60068-2-2	Storage: +70 °C, 16 h Operational: +55 °C, 16 h
Cold test	
EN 60255-1, IEC 60068-2-1	Storage: –40 °C, 16 h Operational: –20 °C, 16 h

Table. 7.3 - 777. Environmental conditions.

IP classes	
Casing protection class	IP54 (front) IP21 (rear)
Temperature ranges	
Ambient service temperature range	–35…+70 °C
Transport and storage temperature range	–40…+70 °C
Other	
Altitude	<2000 m
Overvoltage category	III
Pollution degree	2

Casing and package

Table. 7.3 - 778. Dimensions and weight (small version).

Without packaging (net)	
Dimensions	Height: 177 mm Width: 127 mm (¼ rack) Depth: 179 mm (no connectors)
Weight	Appr. 1.75 kg
With packaging (gross)	
Dimensions	Height: 170 mm Width: 242 mm Depth: 219 mm
Weight	Appr. 2.25 kg

Table. 7.3 - 779. Dimensions and weight (medium version).

Without packaging (net)	
Dimensions	Height: 177 mm Width: 177 mm Depth: 179 mm (no connectors)

© Arcteq Relays Ltd

Weight	Appr. 3.4 kg
With packaging (gross)	
Dimensions	Height: 250 mm Width: 343 mm Depth: 256 mm
Weight	Appr. 4 kg

Table. 7.3 - 780. Dimensions and weight (large version).

Without packaging (net)	
Dimensions	Height: 177 mm Width: 226 mm (½ rack) Depth: 182 mm (no connectors)
Weight	Appr. 3.4 kg
With packaging (gross)	
Dimensions	Height: 250 mm Width: 343 mm Depth: 256 mm
Weight	Appr. 4 kg

8 Ordering information

The following image presents the order code table. The order code defines both the hardware and software features included in the device. The selected frame size and the combination of analog input modules determine the number of available option card slots. Additionally, many function packages have specific hardware dependencies, as certain functions require particular analog input modules. To minimize the risk of configuration errors when creating an order code, it is recommended to use the product configurator available at https://arcteq.summium.com/arcteq-selector/home.

Figure. 8 - 326. Order code guide

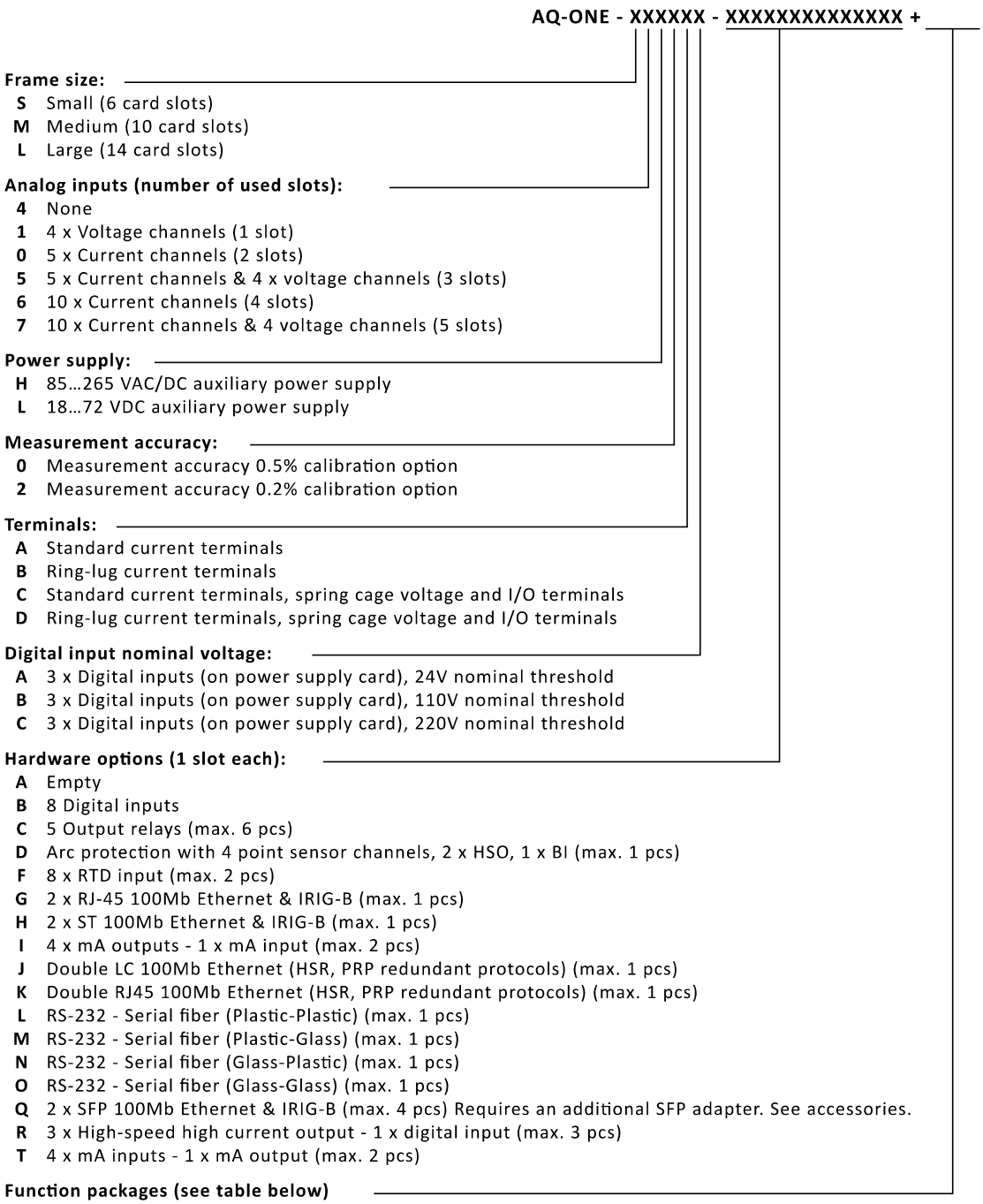

© Arcteq Relays Ltd

Function packages are specified at the end of the order code. Multiple function packages can be installed on a single device, and additional packages can be ordered and activated even after delivery. Some function packages have hardware dependencies. For example, the Directional protection function package requires at least one CT module and one VT module. Functions included in each package are listed in the "Functions included" chapter.

Figure. 8 - 327. Example function package order code with Feeder protection, Voltage protection and Directional protection function packages.

AQ-ONE - XXXXXX - XXX + FDR + VOL + DIR

Table. 8 - 781. Available function packages

Function package tag	Description	HW dependency
FDR	Feeder protection	CT
MOT	Motor protection	CT
CAP	Capacitor bank protection	CT
TRF	Transformer protection	CT
GEN	Generator protection	CT+VT
LPM	Line protection	CT
VOL	Voltage protection	VT
DIR	Directional protection	CT+VT
DIF	Machine differential protection	2xCT
LDF	Line differential protection	CT
DIS	Distance protection	CT+VT
SMT	Synchronous motor protection	CT+VT
PHW	Single phase tripping	CT
POW	Power measurement	CT+VT
AVR	Automatic voltage regulator	CT+VT
PFC	Power factor controller	CT+VT
SYN	Synchronizer	VT
ALM	Alarm annunciator	None
BCU	Bay control	CT+VT

9 Contact and reference information

Manufacturer

Arcteq Relays Ltd.

Visiting and postal address

Kvartsikatu 2 A 1
65300 Vaasa, Finland

Contacts

Phone:	+358 10 3221 370
Website:	arcteq.com
Technical support:	arcteq.com/support-login +358 10 3221 388 (EET 9:00 – 17.00)
E-mail (sales):	sales@arcteq.com

© Arcteq Relays Ltd